No. PF-37AC

TCM®

PARTS CATALOGUE

FORKLIFT TRUCK

GAS & DIESEL POWERED

FG20C6H FD20C6H
FG20T6H FD20T6H
FG20W6H FD20W6H
FG25C6H FD25C6H
FG25T6H FD25T6H
FG25W6H FD25W6H

TCM CORPORATION

ご使用のまえに

このパーツカタログは，TCM フォークリフトの構成部品を収録しています。

部品ご注文について

部品ご注文の際は，必ず車両の形式・仕様・製造番号（号車），部品番号および注文数を明示してください。車両の製造番号（号車）は車両銘板に表示しています。

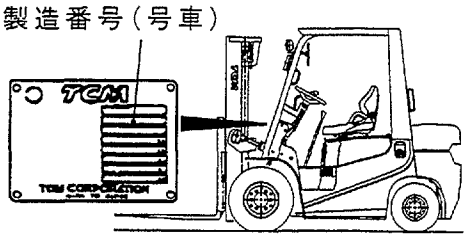

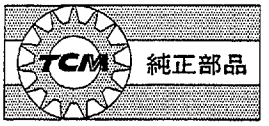

部品は，必ず「TCM 純正部品」をご使用ください。
純正部品以外の部品をご使用になり，故障が発生した場合は保証できません。

ご使用について

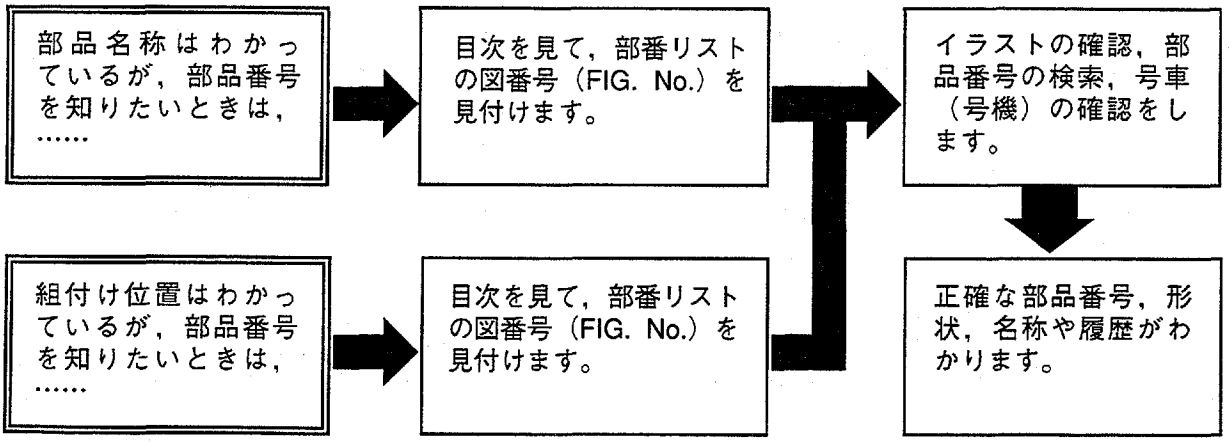

略語および記号

ＡＳＳＹ	組立品を示します。
ＲＨ	車両の前方向に向かって右側を示します。
ＬＨ	車両の前方向に向かって左側を示します。
ＡＲ	必要に応じた数を使用します。
＊	セットおよびキットの販売部品を示します。
Ｔ	厚みを示します。
＋	図示していません。
＃	単体販売しません。

部品は，品質向上のため予告なく変更することがありますので，あらかじめご了承ください。
詳細は，TCM 指定整備工場にご相談ください。

INTRODUCTION

This Parts Catalogue contains the component parts of the TCM FORKLIFT TRUCK.

How to order parts

When ordering, be sure to specify the model name, specification and serial number (machine number) of your machine, as well as the part number and desired quantity for each part. The machine serial number (machine number) is indicated on the machine name plate.

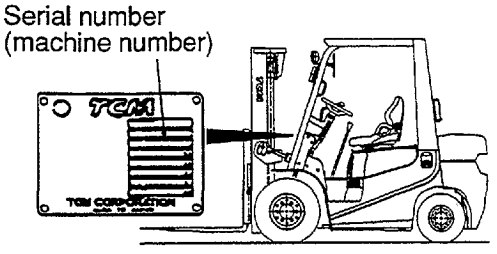

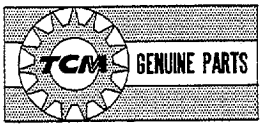

Always use "TCM's Genuine Parts". We cannot guarantee any loss or trouble attributable to other parts than ours.

How to use the Parts Catalogue

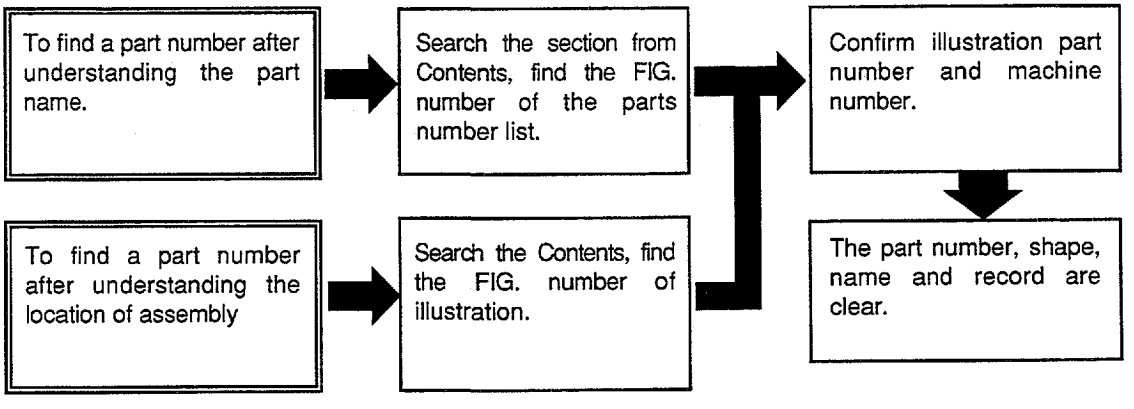

Abbreviations and symbols

ASSY ···	Assembled unit.
RH ·····	Right-hand when viewed forward on the truck.
LH ·····	Left-hand when viewed forward on the truck.
AR ·····	Quantity required.
* ·····	The marketable part set or kit.
T ·····	Thickness.
+ ·····	Not illustrated.
# ·····	Not sold separately.

Materals and specifications subject to change without notice.

CONTENTS 目次

CHASSIS シャーシ

a	FG20C6H	c	FG25C6H	e	FG20W6H	g	FD20C6H	i	FD25C6H	k	FD20W6H
b	FG20T6H	d	FG25T6H	f	FG25W6H	h	FD20T6H	j	FD25T6H	l	FD25W6H

SECTION 部門	a	b	c	d	e	f	g	h	i	j	k	l	FIG.NO.
ENGINE MOUNT (GASOLINE) ｴﾝｼﾞﾝﾏｳﾝﾄ	○	○	○	○	○	○							1
ENGINE MOUNT (DIESEL) ｴﾝｼﾞﾝﾏｳﾝﾄ							○	○	○	○	○	○	2
AIR CLEANER (GASOLINE) ｴｱｰｸﾘｰﾅ	○	○	○	○	○	○							3
AIR CLEANER (DIESEL) ｴｱｰｸﾘｰﾅ							○	○	○	○	○	○	4
AIR DUCT (GASOLINE) ｴｱｰﾀﾞｸﾄ	○	○	○	○	○	○							5
AIR DUCT (DIESEL) ｴｱｰﾀﾞｸﾄ							○	○	○	○	○	○	6
PRE CLEANER [CAKB] ﾌﾟﾚｸﾘｰﾅ	○	○	○	○	○	○	○	○	○	○	○	○	7
COOLING UNIT (GASOLINE) ｸｰﾘﾝｸﾞﾕﾆｯﾄ	○	○	○	○	○	○							8
COOLING UNIT (DIESEL:CLUTCH) ｸｰﾘﾝｸﾞﾕﾆｯﾄ							○		○				9
COOLING UNIT (DIESEL:TOR-CON & OIL CLUTCH) ｸｰﾘﾝｸﾞﾕﾆｯﾄ								○		○	○	○	10
RADIATOR PARTS & RESERVE TANK ﾗｼﾞｴｰﾀﾊﾟｰﾂ&ﾘｻﾞｰﾌﾞﾀﾝｸ	○	○	○	○	○	○	○	○	○	○	○	○	11
FAN SHROUD (GASOLINE:CLUTCH & TOR-CON) ﾌｧﾝｼｭﾗｳﾄﾞ	○	○	○	○									12
FAN SHROUD (GASOLINE:OIL CLUTCH) ﾌｧﾝｼｭﾗｳﾄﾞ					○	○							13
FAN SHROUD (DIESEL:CLUTCH & TOR-CON) ﾌｧﾝｼｭﾗｳﾄﾞ							○	○	○	○			14
FAN SHROUD (DIESEL:OIL CLUTCH) ﾌｧﾝｼｭﾗｳﾄﾞ											○	○	15
FUEL SYSTEM (SUPPLY) ﾌｭｰｴﾙｼｽﾃﾑ	○	○	○	○	○	○	○	○	○	○	○	○	16
FUEL SYSTEM (SUCTION) ﾌｭｰｴﾙｼｽﾃﾑ	○	○	○	○	○	○	○	○	○	○	○	○	17
EXHAUST SYSTEM (GASOLINE) ｴｷｿﾞｰｽﾄｼｽﾃﾑ	○	○	○	○	○	○							18
EXHAUST SYSTEM (DIESEL) ｴｷｿﾞｰｽﾄｼｽﾃﾑ							○	○	○	○	○	○	19
EXHAUST SYSTEM (DIESEL):[DPF] ｴｷｿﾞｰｽﾄｼｽﾃﾑ							○	○	○	○	○	○	20
POST & TAIL [TUE] ﾎﾟｽﾄ&ﾃｲﾙ	○	○	○	○	○	○	○	○	○	○	○	○	21

CONTENTS 目次

CHASSIS シャーシ

a	FG20C6H	c	FG25C6H	e	FG20W6H	g	FD20C6H	i	FD25C6H	k	FD20W6H
b	FG20T6H	d	FG25T6H	f	FG25W6H	h	FD20T6H	j	FD25T6H	l	FD25W6H

SECTION 部門	a	b	c	d	e	f	g	h	i	j	k	l	FIG.NO.
POST & TAIL [TUE/(EXB,EXC,EXE,EXK,EXN)] ﾎﾟｽﾄ&ﾃｲﾙ	○	○	○	○			○	○	○	○			22
WIRE HARNESS (DIESEL):[DPF] ﾜｲﾔﾊｰﾈｽ							○	○	○	○	○	○	23
FRONT TUBE & JOINT (DIESEL):[DPF] ﾌﾛﾝﾄﾁｭｰﾌﾞ&ｼﾞｮｲﾝﾄ							○	○	○	○	○	○	24
COMBINATION METER (GASOLINE) ｺﾝﾋﾞﾈｰｼｮﾝﾒｰﾀ	○	○	○	○	○	○							25
COMBINATION METER (DIESEL) ｺﾝﾋﾞﾈｰｼｮﾝﾒｰﾀ							○	○	○	○	○	○	26
COMBINATION METER (GASOLINE):[EECG][EECLP] ｺﾝﾋﾞﾈｰｼｮﾝﾒｰﾀ	○	○	○	○									27
STEERING SHAFT COVER (CLUTCH)(OIL CLUTCH) ｽﾃｱﾘﾝｸﾞｼｬﾌﾄｶﾊﾞｰ	○		○		○	○	○		○		○	○	28
STEERING SHAFT COVER (TOR-CON) ｽﾃｱﾘﾝｸﾞｼｬﾌﾄｶﾊﾞｰ		○		○				○		○			29
ELECTRIC PARTS (1/2)(GASOLINE) ｴﾚｸﾄﾘｯｸﾊﾟｰﾂ(1/2)	○	○	○	○	○	○							30
ELECTRIC PARTS (1/2)(DIESEL) ｴﾚｸﾄﾘｯｸﾊﾟｰﾂ(1/2)							○	○	○	○	○	○	31
ELECTRIC PARTS (2/2)(GASOLINE) ｴﾚｸﾄﾘｯｸﾊﾟｰﾂ(2/2)	○	○	○	○	○	○							32
ELECTRIC PARTS (2/2)(DIESEL) ｴﾚｸﾄﾘｯｸﾊﾟｰﾂ(2/2)							○	○	○	○	○	○	33
FRONT GUARD WIRE HARNESS (CLUTCH & OIL CLUTCH) ﾌﾛﾝﾄｶﾞｰﾄﾞﾜｲﾔﾊｰﾈｽ	○		○		○	○	○		○		○	○	34
FRONT GUARD WIRE HARNESS (TOR-CON) ﾌﾛﾝﾄｶﾞｰﾄﾞﾜｲﾔﾊｰﾈｽ		○		○				○		○			35
ENGINE WIRE HARNESS (GASOLINE:CLUTCH & OIL CLUTCH) ｴﾝｼﾞﾝﾜｲﾔﾊｰﾈｽ	○		○		○	○							36
ENGINE WIRE HARNESS (GASOLINE:TOR-CON) ｴﾝｼﾞﾝﾜｲﾔﾊｰﾈｽ		○		○									37
ENGINE WIRE HARNESS (DIESEL:CLUTCH & OIL CLUTCH) ｴﾝｼﾞﾝﾜｲﾔﾊｰﾈｽ							○		○		○	○	38
ENGINE WIRE HARNESS (DIESEL:TOR-CON) ｴﾝｼﾞﾝﾜｲﾔﾊｰﾈｽ								○		○			39
BACK BUZZER ﾊﾞｯｸﾌﾞｻﾞｰ	○	○	○	○	○	○	○	○	○	○	○	○	40
LIGHT UNIT ﾗｲﾄﾕﾆｯﾄ	○	○	○	○	○	○	○	○	○	○	○	○	41
LICENSE LIGHT ﾗｲｾﾝｽﾗｲﾄ	○	○	○	○	○	○	○	○	○	○	○	○	42

CONTENTS 目次

CHASSIS シャーシ

a	FG20C6H	c	FG25C6H	e	FG20W6H	g	FD20C6H	i	FD25C6H	k	FD20W6H
b	FG20T6H	d	FG25T6H	f	FG25W6H	h	FD20T6H	j	FD25T6H	l	FD25W6H

SECTION 部門	a	b	c	d	e	f	g	h	i	j	k	l	FIG. NO.
LICENSE LIGHT ﾗｲｾﾝｽﾗｲﾄ	○	○	○	○	○	○	○	○	○	○	○	○	42A
LICENSE LIGHT [SCB001/RRE] ﾗｲｾﾝｽﾗｲﾄ	○	○	○	○	○	○	○	○	○	○	○	○	43
LICENSE LIGHT [RRE/RW] ﾗｲｾﾝｽﾗｲﾄ			○	○		○			○	○		○	44
LICENSE LIGHT [TUE/RRE][RRE/(LPG,LPO,CNG)] ﾗｲｾﾝｽﾗｲﾄ	○	○	○	○	○	○	○	○	○	○	○	○	45
REAR WORKING LIGHT [RWLR] ﾘﾔｰﾜｰｷﾝｸﾞﾗｲﾄ	○	○	○	○	○	○	○	○	○	○	○	○	46
REAR WORKING LIGHT [RWLL] ﾘﾔｰﾜｰｷﾝｸﾞﾗｲﾄ	○	○	○	○	○	○	○	○	○	○	○	○	47
REAR WORKING LIGHT [RWL2] ﾘﾔｰﾜｰｷﾝｸﾞﾗｲﾄ	○	○	○	○	○	○	○	○	○	○	○	○	48
REVOLVING LIGHT [RLY][RLR] ﾘﾎﾞﾙﾋﾞﾝｸﾞﾗｲﾄ	○	○	○	○	○	○	○	○	○	○	○	○	49
SPOT LIGHT [SPL] ｽﾎﾟｯﾄﾗｲﾄ	○	○	○	○	○	○	○	○	○	○	○	○	50
HEATER UNIT [HR] ﾋｰﾀﾕﾆｯﾄ	○	○	○	○	○	○	○	○	○	○	○	○	51
HEATER VALVE & ELBOW (GASOLINE):[HR] ﾋｰﾀﾊﾞﾙﾌﾞ&ｴﾙﾎﾞ	○	○	○	○	○	○							52
HEATER VALVE & ELBOW (DIESEL):[HR] ﾋｰﾀﾊﾞﾙﾌﾞ&ｴﾙﾎﾞ							○	○	○	○	○	○	53
FAN [FAN] ﾌｧﾝ	○	○	○	○	○	○	○	○	○	○	○	○	54
AMMETER [AM] ｱﾝﾒｰﾀ	○	○	○	○	○	○	○	○	○	○	○	○	55
TORQUE CONVERTER THERMOMETER [TTM] ﾄﾙｸｺﾝﾊﾞｰﾀｻｰﾓﾒｰﾀ		○		○				○		○			56
TORQUE CONVERTER PRESSURE METER [TPM] ﾄﾙｸｺﾝﾊﾞｰﾀﾌﾟﾚｯｼｬﾒｰﾀ		○		○				○		○			57
SPEED METER [SM] ｽﾋﾟｰﾄﾞﾒｰﾀ	○	○	○	○	○	○	○	○	○	○	○	○	58
SPEED DETECTOR UNIT [SAS] ｽﾋﾟｰﾄﾞﾃﾞｨﾃｸﾀﾕﾆｯﾄ	○	○	○	○	○	○	○	○	○	○	○	○	59
SPEED ALARM SYSTEM [SASB] ｽﾋﾟｰﾄﾞｱﾗｰﾑｼｽﾃﾑ	○	○	○	○	○	○	○	○	○	○	○	○	60
SPEED ALARM SYSTEM [SASR] ｽﾋﾟｰﾄﾞｱﾗｰﾑｼｽﾃﾑ	○	○	○	○	○	○	○	○	○	○	○	○	61
SPEED ALARM SYSTEM [SASC] ｽﾋﾟｰﾄﾞｱﾗｰﾑｼｽﾃﾑ	○	○	○	○	○	○	○	○	○	○	○	○	62

CONTENTS 目次

CHASSIS シャーシ

a	FG20C6H	c	FG25C6H	e	FG20W6H	g	FD20C6H	i	FD25C6H	k	FD20W6H
b	FG20T6H	d	FG25T6H	f	FG25W6H	h	FD20T6H	j	FD25T6H	l	FD25W6H

SECTION 部門	a	b	c	d	e	f	g	h	i	j	k	l	FIG.NO.
OK MONITOR [OKM] OKモニタ	○	○	○	○	○	○	○	○	○	○	○	○	63
DRIVE UNIT MOUNT (CLUTCH) ドライブユニットマウント	○		○				○		○				64
CLUTCH (CLUTCH) クラッチ	○		○				○		○				65
MISSION CASE (CLUTCH)(OIL CLUTCH) ミッションケース	○		○		○	○	○		○		○	○	66
MISSION GEAR (CLUTCH)(OIL CLUTCH) ミッションギヤー	○		○		○	○	○		○		○	○	67
DRIVE UNIT MOUNT (OIL CLUTCH) ドライブユニットマウント					○	○					○	○	68
CLUTCH (OIL CLUTCH) クラッチ					○	○					○	○	69
DRIVE UNIT MOUNT (TOR-CON) ドライブユニットマウント		○		○				○		○			70
TORQUE CONVERTER CASE (TOR-CON) トルクコンバータケース		○		○				○		○			71
CHARGING PUMP (TOR-CON) チャージングポンプ		○		○				○		○			72
MISSION CASE (TOR-CON) ミッションケース		○		○				○		○			73
CLUTCH PACK (TOR-CON) クラッチパック		○		○				○		○			74
CONTROL VALVE (TOR-CON) コントロールバルブ		○		○				○		○			75
CONTROL VALVE (TOR-CON) コントロールバルブ		○		○				○		○			75A
REDUCTION リダクション	○	○	○	○	○	○	○	○	○	○	○	○	76
DIFFERENTIAL ディファレンシャル	○	○	○	○	○	○	○	○	○	○	○	○	77
DRIVE AXLE ドライブアクスル	○	○	○	○	○	○	○	○	○	○	○	○	78
DRIVE AXLE ドライブアクスル	○	○	○	○	○	○	○	○	○	○	○	○	78A
WHEEL BRAKE ホイールブレーキ	○	○	○	○	○	○	○	○	○	○	○	○	79
STEERING WHEEL UNIT ステアリングホイールユニット	○	○	○	○	○	○	○	○	○	○	○	○	80
STEERING WHEEL UNIT (TOR-CON):[EXN] ステアリングホイールユニット		○		○				○		○			81

CONTENTS 目次

CHASSIS シャーシ

a	FG20C6H	c	FG25C6H	e	FG20W6H	g	FD20C6H	i	FD25C6H	k	FD20W6H
b	FG20T6H	d	FG25T6H	f	FG25W6H	h	FD20T6H	j	FD25T6H	l	FD25W6H

SECTION 部門	a	b	c	d	e	f	g	h	i	j	k	l	FIG.NO.
GEAR BOX ｷﾞﾔｰﾎﾞｯｸｽ	○	○	○	○	○	○	○	○	○	○	○	○	82
GEAR BOX [(EXC,EXE,EXK,EXN)/PSS] ｷﾞﾔｰﾎﾞｯｸｽ	○	○	○	○			○	○	○	○			83
ORBITROL [EXC][EXE][EXK][EXN][OBT] ｵｰﾋﾞｯﾄﾛｰﾙ	○	○	○	○			○	○	○	○			84
DRAG LINK ﾄﾞﾗｯｸﾞﾘﾝｸ	○	○	○	○	○	○	○	○	○	○	○	○	85
STEERING AXLE ｽﾃｱﾘﾝｸﾞｱｸｽﾙ	○	○	○	○	○	○	○	○	○	○	○	○	86
STEERING AXLE [EXC][EXE][EXK][EXN][OBT] ｽﾃｱﾘﾝｸﾞｱｸｽﾙ	○	○	○	○			○	○	○	○			87
STEERING AXLE [(EXC,EXE,EXK,EXN)/PSS] ｽﾃｱﾘﾝｸﾞｱｸｽﾙ	○	○	○	○			○	○	○	○			88
AXLE SUPPORT ｱｸｽﾙｻﾎﾟｰﾄ	○	○	○	○	○	○	○	○	○	○	○	○	89
HUB NUT ﾊﾌﾞﾅｯﾄ	○	○	○	○	○	○	○	○	○	○	○	○	90
FENDER [DD][SDD][TUJSF] ﾌｪﾝﾀﾞ	○	○	○	○	○	○	○	○	○	○	○	○	91
FRONT WHEEL ﾌﾛﾝﾄﾎｲｰﾙ	○	○	○	○	○	○	○	○	○	○	○	○	92
FRONT WHEEL [DR F] ﾌﾛﾝﾄﾎｲｰﾙ	○	○	○	○	○	○	○	○	○	○	○	○	93
FRONT WHEEL [TJ F][TJSF][T F][TS F] ﾌﾛﾝﾄﾎｲｰﾙ	○	○	○	○	○	○	○	○	○	○	○	○	94
FRONT WHEEL [(TJ F,TJSF,T F,TS F)/DR F] ﾌﾛﾝﾄﾎｲｰﾙ	○	○	○	○	○	○	○	○	○	○	○	○	95
FRONT WHEEL [TUJF][TUSF][TUWF][TUGF] ﾌﾛﾝﾄﾎｲｰﾙ	○	○	○	○	○	○	○	○	○	○	○	○	96
FRONT WHEEL [TUJF/DR F] ﾌﾛﾝﾄﾎｲｰﾙ	○	○	○	○	○	○	○	○	○	○	○	○	97
FRONT WHEEL [TRAF] ﾌﾛﾝﾄﾎｲｰﾙ	○	○	○	○	○	○	○	○	○	○	○	○	98
FRONT WHEEL [TUJSF] ﾌﾛﾝﾄﾎｲｰﾙ	○	○	○	○	○	○	○	○	○	○	○	○	99
FRONT WHEEL [TJ W][TJSW][T W][TS W] ﾌﾛﾝﾄﾎｲｰﾙ	○	○	○	○	○	○	○	○	○	○	○	○	100
FRONT WHEEL [TUJW][TUSW][TUWW][TUGW] ﾌﾛﾝﾄﾎｲｰﾙ	○	○	○	○	○	○	○	○	○	○	○	○	101
FRONT WHEEL [TJ W70][TJSW70][T W70][TS W70] ﾌﾛﾝﾄﾎｲｰﾙ	○	○	○	○	○	○	○	○	○	○	○	○	102

CONTENTS 目次

CHASSIS シャーシ

a	FG20C6H	c	FG25C6H	e	FG20W6H	g	FD20C6H	i	FD25C6H	k	FD20W6H
b	FG20T6H	d	FG25T6H	f	FG25W6H	h	FD20T6H	j	FD25T6H	l	FD25W6H

SECTION 部門	a	b	c	d	e	f	g	h	i	j	k	l	FIG. NO.
FRONT WHEEL [TUJW70][TUSW70][TUWW70][TUGW70] フロントホイール	○	○	○	○	○	○	○	○	○	○	○	○	103
REAR WHEEL リヤーホイール	○	○	○	○	○	○	○	○	○	○	○	○	104
REAR WHEEL [DR R] リヤーホイール	○	○	○	○	○	○	○	○	○	○	○	○	105
REAR WHEEL [TJ R][TJSR][T R][TS R] リヤーホイール	○	○	○	○	○	○	○	○	○	○	○	○	106
REAR WHEEL [(TJ R,TJSR,T R,TS R)/DR R] リヤーホイール	○	○	○	○	○	○	○	○	○	○	○	○	107
REAR WHEEL [TUJR][TUSR][TUWR][TUGR] リヤーホイール	○	○	○	○	○	○	○	○	○	○	○	○	108
REAR WHEEL [TUJR/DR R] リヤーホイール	○	○	○	○	○	○	○	○	○	○	○	○	109
REAR WHEEL [TRAR] リヤーホイール	○	○	○	○	○	○	○	○	○	○	○	○	110
POWER CYLINDER パワーシリンダ	○	○	○	○	○	○	○	○	○	○	○	○	111
POWER CYLINDER [EXC][EXE][EXK][EXN][OBT] パワーシリンダ	○	○	○	○			○	○	○	○			112
POWER CYLINDER [(EXC,EXE,EXK,EXN)/PSS] パワーシリンダ	○	○	○	○			○	○	○	○			113
POWER CYLINDER BOOT [PSB][FC][RINFC] パワーシリンダブーツ	○	○	○	○	○	○	○	○	○	○	○	○	114
OVERHEAD GUARD オーバヘッドガード	○	○	○	○	○	○	○	○	○	○	○	○	115
OVERHEAD GUARD [EXB][EXC][EXE][EXK][EXN] オーバヘッドガード	○	○	○	○			○	○	○	○			116
FRONT PIPE フロントパイプ	○	○	○	○	○	○	○	○	○	○	○	○	117
REAR PIPE リヤーパイプ	○	○	○	○	○	○	○	○	○	○	○	○	118
REAR PIPE [EXB][EXC][EXE][EXK][EXN] リヤーパイプ	○	○	○	○			○	○	○	○			119
REAR PIPE [RW] リヤーパイプ			○	○		○			○	○		○	120
FRONT LAMP BRACKET フロントランプブラケット	○	○	○	○	○	○	○	○	○	○	○	○	121
FRONT LAMP BRACKET [HL][BKH] フロントランプブラケット	○	○	○	○	○	○	○	○	○	○	○	○	122
REAR LAMP BRACKET リヤーランプブラケット	○	○	○	○	○	○	○	○	○	○	○	○	123

CONTENTS 目次

CHASSIS シャーシ

a	FG20C6H	c	FG25C6H	e	FG20W6H	g	FD20C6H	i	FD25C6H	k	FD20W6H
b	FG20T6H	d	FG25T6H	f	FG25W6H	h	FD20T6H	j	FD25T6H	l	FD25W6H

SECTION 部門	a	b	c	d	e	f	g	h	i	j	k	l	FIG.NO.
HEAD GUARD PARTS ﾍｯﾄﾞｶﾞｰﾄﾞﾊﾟｰﾂ	○	○	○	○	○	○	○	○	○	○	○	○	124
ACCEL PEDAL (GASOLINE) ｱｸｾﾙﾍﾟﾀﾞﾙ	○	○	○	○	○	○							125
ACCEL PEDAL (DIESEL) ｱｸｾﾙﾍﾟﾀﾞﾙ							○	○	○	○	○	○	126
FOOT PEDAL (CLUTCH) ﾌｯﾄﾍﾟﾀﾞﾙ	○		○				○		○				127
FOOT PEDAL (CLUTCH):[PC] ﾌｯﾄﾍﾟﾀﾞﾙ	○		○				○		○				128
FOOT PEDAL (TOR-CON) ﾌｯﾄﾍﾟﾀﾞﾙ		○		○				○		○			129
FOOT PEDAL (OIL CLUTCH) ﾌｯﾄﾍﾟﾀﾞﾙ					○	○					○	○	130
FOOT PEDAL CYLINDER (CLUTCH) ﾌｯﾄﾍﾟﾀﾞﾙｼﾘﾝﾀﾞ	○		○				○		○				131
FOOT PEDAL CYLINDER (CLUTCH):[PC] ﾌｯﾄﾍﾟﾀﾞﾙｼﾘﾝﾀﾞ	○		○				○		○				132
FOOT PEDAL CYLINDER (TOR-CON) ﾌｯﾄﾍﾟﾀﾞﾙｼﾘﾝﾀﾞ		○		○				○		○			133
FOOT PEDAL CYLINDER (OIL CLUTCH) ﾌｯﾄﾍﾟﾀﾞﾙｼﾘﾝﾀﾞ					○	○					○	○	134
BRAKE PIPE (CLUTCH) ﾌﾞﾚｰｷﾊﾟｲﾌﾟ	○		○				○		○				135
BRAKE PIPE (CLUTCH):[PC] ﾌﾞﾚｰｷﾊﾟｲﾌﾟ	○		○				○		○				136
BRAKE PIPE (OIL CLUTCH) ﾌﾞﾚｰｷﾊﾟｲﾌﾟ					○	○					○	○	137
BRAKE PIPE (TOR-CON) ﾌﾞﾚｰｷﾊﾟｲﾌﾟ		○		○				○		○			138
FOOT PEDAL COVER ﾌｯﾄﾍﾟﾀﾞﾙｶﾊﾞｰ	○	○	○	○	○	○	○	○	○	○	○	○	139
BRAKE MASTER CYLINDER ﾌﾞﾚｰｷﾏｽﾀｼﾘﾝﾀﾞ	○	○	○	○	○	○	○	○	○	○	○	○	140
BRAKE MASTER CYLINDER ﾌﾞﾚｰｷﾏｽﾀｼﾘﾝﾀﾞ	○	○	○	○	○	○	○	○	○	○	○	○	140A
BRAKE LEVER ﾌﾞﾚｰｷﾚﾊﾞｰ	○	○	○	○	○	○	○	○	○	○	○	○	141
FRAME ﾌﾚｰﾑ	○	○	○	○	○	○	○	○	○	○	○	○	142
OIL TANK (CLUTCH)(TOR-CON) ｵｲﾙﾀﾝｸ	○	○	○	○			○	○	○	○			143

CONTENTS 目次

CHASSIS シャーシ

a	FG20C6H	c	FG25C6H	e	FG20W6H	g	FD20C6H	i	FD25C6H	k	FD20W6H
b	FG20T6H	d	FG25T6H	f	FG25W6H	h	FD20T6H	j	FD25T6H	l	FD25W6H

SECTION 部門	a	b	c	d	e	f	g	h	i	j	k	l	FIG.NO.
OIL TANK (OIL CLUTCH) オイルタンク					○	○					○	○	144
OIL CAP & LEVEL オイルキャップ&レベル	○	○	○	○	○	○	○	○	○	○	○	○	145
FUEL TANK (GASOLINE) フューエルタンク	○	○	○	○	○	○							146
FUEL TANK (DIESEL) フューエルタンク							○	○	○	○	○	○	147
BALANCE WEIGHT バランスウエイト	○	○	○	○	○	○	○	○	○	○	○	○	148
BALANCE WEIGHT [RW] バランスウエイト			○	○		○			○	○		○	149
BALANCE WEIGHT [LPG][LPO][EECLP][CNG] バランスウエイト	○	○	○	○	○	○							150
BALANCE WEIGHT [HC] バランスウエイト	○	○	○	○	○	○	○	○	○	○	○	○	151
FRONT GUARD フロントガード	○	○	○	○	○	○	○	○	○	○	○	○	152
BONNET ボンネット	○	○	○	○	○	○	○	○	○	○	○	○	153
RADIATOR COVER ラジエータカバー	○	○	○	○	○	○	○	○	○	○	○	○	154
RADIATOR COVER [RW] ラジエータカバー			○	○		○			○	○		○	155
RADIATOR COVER [LPG][LPO][EECLP][CNG] ラジエータカバー	○	○	○	○	○	○							156
RADIATOR COVER [SCB001][SCBCR] ラジエータカバー	○	○	○	○	○	○	○	○	○	○	○	○	157
BONNET HINGE ボンネットヒンジ	○	○	○	○	○	○	○	○	○	○	○	○	158
FLOOR BOARD フロアボード	○	○	○	○	○	○	○	○	○	○	○	○	159
TRAY トレー	○	○	○	○	○	○	○	○	○	○	○	○	160
TRAY [AW061][AW071][RWL][LPG][LPO][BB SW][BBASW] トレー	○	○	○	○	○	○	○	○	○	○	○	○	161
TRAY [RWL/LPG][(AW061,AW071)/RWL/LPG] トレー	○	○	○	○	○	○							162
TRAY [SM][AM][TPM] トレー	○	○	○	○	○	○	○	○	○	○	○	○	163
TRAY [SM/(LPG,BB SW,BBASW)][SM/(LPG,BB SW,BBASW)/RWL] トレー	○	○	○	○	○	○	○	○	○	○	○	○	164

CONTENTS 目次

CHASSIS シャーシ

a	FG20C6H	c	FG25C6H	e	FG20W6H	g	FD20C6H	i	FD25C6H	k	FD20W6H
b	FG20T6H	d	FG25T6H	f	FG25W6H	h	FD20T6H	j	FD25T6H	l	FD25W6H

SECTION 部門	a	b	c	d	e	f	g	h	i	j	k	l	FIG.NO.
TRAY [SM/(AW061,AW071)/RWL] トレー	○	○	○	○	○	○	○	○	○	○	○	○	165
FRONT GUARD BOOT [FC] フロントガードブーツ	○	○	○	○	○	○	○	○	○	○	○	○	166
SEAT シート	○	○	○	○	○	○	○	○	○	○	○	○	167
SEAT [HGL] シート	○	○	○	○	○	○	○	○	○	○	○	○	168
SEAT [RW][CNG] シート			○	○		○			○	○		○	169
PUMP UNIT (GASOLINE:CLUTCH & TOR-CON) ポンプユニット	○	○	○	○									170
PUMP UNIT (DIESEL:CLUTCH & TOR-CON) ポンプユニット							○	○	○	○			171
PUMP UNIT (GASOLINE:OIL CLUTCH) ポンプユニット					○	○							172
PUMP UNIT (DIESEL:OIL CLUTCH) ポンプユニット											○	○	173
CONTROL VALVE [2SV] コントロールバルブ	○	○	○	○	○	○	○	○	○	○	○	○	174
CONTROL VALVE [3SV] コントロールバルブ	○	○	○	○	○	○	○	○	○	○	○	○	175
CONTROL VALVE [4SV] コントロールバルブ	○	○	○	○	○	○	○	○	○	○	○	○	176
CONTROL VALVE [5SV] コントロールバルブ	○	○	○	○	○	○	○	○	○	○	○	○	177
INLET SECTION インレットセクション	○	○	○	○	○	○	○	○	○	○	○	○	178
SPOOL SECTION (LIFT) スプールセクション	○	○	○	○	○	○	○	○	○	○	○	○	179
SPOOL SECTION (TILT) スプールセクション	○	○	○	○	○	○	○	○	○	○	○	○	180
SPOOL SECTION [3SV][4SV][5SV] スプールセクション	○	○	○	○	○	○	○	○	○	○	○	○	181
CONTROL VALVE FITTING コントロールバルブフィッティング	○	○	○	○	○	○	○	○	○	○	○	○	182
VALVE CONTROL [2SV] バルブコントロール	○	○	○	○	○	○	○	○	○	○	○	○	183
VALVE CONTROL [3SV] バルブコントロール	○	○	○	○	○	○	○	○	○	○	○	○	184
VALVE CONTROL [4SV] バルブコントロール	○	○	○	○	○	○	○	○	○	○	○	○	185

CONTENTS 目次

CHASSIS シャーシ

a	FG20C6H	c	FG25C6H	e	FG20W6H	g	FD20C6H	i	FD25C6H	k	FD20W6H
b	FG20T6H	d	FG25T6H	f	FG25W6H	h	FD20T6H	j	FD25T6H	l	FD25W6H

SECTION 部門	a	b	c	d	e	f	g	h	i	j	k	l	FIG.NO.
VALVE CONTROL [5SV] ﾊﾞﾙﾌﾞｺﾝﾄﾛｰﾙ	○	○	○	○	○	○	○	○	○	○	○	○	186
VALVE CONTROL KNOB ﾊﾞﾙﾌﾞｺﾝﾄﾛｰﾙﾉﾌﾞ	○	○	○	○	○	○	○	○	○	○	○	○	187
HYDRAULIC LINE (MAIN)(1/3)(GASOLINE:CLUTCH & TOR-CON) ﾊｲﾄﾞﾛﾘｯｸﾗｲﾝ(ﾒｲﾝ)(1/3)	○	○	○	○									188
HYDRAULIC LINE (MAIN)(1/3)(DIESEL:CLUTCH & TOR-CON) ﾊｲﾄﾞﾛﾘｯｸﾗｲﾝ(ﾒｲﾝ)(1/3)							○	○	○	○			189
HYDRAULIC LINE (MAIN)(1/3)(GASOLINE:OIL CLUTCH) ﾊｲﾄﾞﾛﾘｯｸﾗｲﾝ(ﾒｲﾝ)(1/3)					○	○							190
HYDRAULIC LINE (MAIN)(1/3)(DIESEL:OIL CLUTCH) ﾊｲﾄﾞﾛﾘｯｸﾗｲﾝ(ﾒｲﾝ)(1/3)											○	○	191
HYDRAULIC LINE (MAIN)(2/3) ﾊｲﾄﾞﾛﾘｯｸﾗｲﾝ(ﾒｲﾝ)(2/3)	○	○	○	○	○	○	○	○	○	○	○	○	192
HYDRAULIC LINE (MAIN)(2/3)[EXC][EXE][EXK][EXN][OBT] ﾊｲﾄﾞﾛﾘｯｸﾗｲﾝ(ﾒｲﾝ)(2/3)	○	○	○	○			○	○	○	○			193
HYDRAULIC LINE (MAIN)(2/3)[(EXC,EXE,EXK,EXN)/PSS] ﾊｲﾄﾞﾛﾘｯｸﾗｲﾝ(ﾒｲﾝ)(2/3)	○	○	○	○			○	○	○	○			194
HYDRAULIC LINE (MAIN)(3/3) ﾊｲﾄﾞﾛﾘｯｸﾗｲﾝ(ﾒｲﾝ)(3/3)	○	○	○	○	○	○	○	○	○	○	○	○	195
HYDRAULIC LINE (TOR-CON)(GASOLINE) ﾊｲﾄﾞﾛﾘｯｸﾗｲﾝ(ﾄﾙｺﾝ)		○		○									196
HYDRAULIC LINE (TOR-CON)(DIESEL) ﾊｲﾄﾞﾛﾘｯｸﾗｲﾝ(ﾄﾙｺﾝ)								○		○			197
HYDRAULIC LINE (OIL CLUTCH)(GASOLINE) ﾊｲﾄﾞﾛﾘｯｸﾗｲﾝ(ｵｲﾙｸﾗｯﾁ)					○	○							198
HYDRAULIC LINE (OIL CLUTCH)(DIESEL) ﾊｲﾄﾞﾛﾘｯｸﾗｲﾝ(ｵｲﾙｸﾗｯﾁ)											○	○	199
TILT CYLINDER ﾃｨﾙﾄｼﾘﾝﾀﾞ	○	○	○	○	○	○	○	○	○	○	○	○	200
TILT BOOT [TLB][FC] ﾃｨﾙﾄﾌﾞｰﾂ	○	○	○	○	○	○	○	○	○	○	○	○	201
DECAL (1/2) ﾃﾞｶﾙ(1/2)	○	○	○	○	○	○	○	○	○	○	○	○	202
DECAL (2/2) ﾃﾞｶﾙ(2/2)	○	○	○	○	○	○	○	○	○	○	○	○	203
DECAL (2/2)[EXB] ﾃﾞｶﾙ(2/2)	○	○	○	○			○	○	○	○			204
DECAL (2/2)[EXC] ﾃﾞｶﾙ(2/2)	○	○	○	○			○	○	○	○			205
DECAL (2/2)[EXE] ﾃﾞｶﾙ(2/2)	○	○	○	○			○	○	○	○			206

CONTENTS 目次

CHASSIS シャーシ

a	FG20C6H	c	FG25C6H	e	FG20W6H	g	FD20C6H	i	FD25C6H	k	FD20W6H
b	FG20T6H	d	FG25T6H	f	FG25W6H	h	FD20T6H	j	FD25T6H	l	FD25W6H

SECTION 部門	a	b	c	d	e	f	g	h	i	j	k	l	FIG.NO.
DECAL (2/2)[EXK] ﾃﾞｶﾙ(2/2)	○	○	○	○			○	○	○	○			207
DECAL (2/2)[EXN] ﾃﾞｶﾙ(2/2)	○	○	○	○			○	○	○	○			208
SERVICE TOOL [TO][EX] ｻｰﾋﾞｽﾂｰﾙ	○	○	○	○	○	○	○	○	○	○	○	○	209
FIRE EXTINGUISHER [FE][FE M] ﾌｧｲﾔｲｸｽﾃｨﾝｸﾞｲｯｼｬ	○	○	○	○	○	○	○	○	○	○	○	○	210

CONTENTS 目次

MAST マスト

a	FG20C6H	c	FG25C6H	e	FG20W6H	g	FD20C6H	i	FD25C6H	k	FD20W6H
b	FG20T6H	d	FG25T6H	f	FG25W6H	h	FD20T6H	j	FD25T6H	l	FD25W6H

SECTION 部門	a	b	c	d	e	f	g	h	i	j	k	l	FIG. NO.
[VM39A]													
FORK [VM39A] ﾌｫｰｸ	○	○	○	○	○	○	○	○	○	○	○	○	211
LIFT BRACKET [VM39A] ﾘﾌﾄﾌﾞﾗｹｯﾄ	○	○	○	○	○	○	○	○	○	○	○	○	212
BACKREST [VM39A] ﾊﾞｯｸﾚｽﾄ	○	○	○	○	○	○	○	○	○	○	○	○	213
MAST [VM39A] ﾏｽﾄ	○	○	○	○	○	○	○	○	○	○	○	○	214
LIFT CYLINDER [VM39A] ﾘﾌﾄｼﾘﾝﾀﾞ	○	○	○	○	○	○	○	○	○	○	○	○	215
MAST PIPING [VM39A] ﾏｽﾄﾊﾟｲﾋﾟﾝｸﾞ	○	○	○	○	○	○	○	○	○	○	○	○	216
[VFM39A]													
FORK [VFM39A] ﾌｫｰｸ	○	○	○	○	○	○	○	○	○	○	○	○	217
LIFT BRACKET [VFM39A] ﾘﾌﾄﾌﾞﾗｹｯﾄ	○	○	○	○	○	○	○	○	○	○	○	○	218
BACKREST [VFM39A] ﾊﾞｯｸﾚｽﾄ	○	○	○	○	○	○	○	○	○	○	○	○	219
MAST [VFM39A] ﾏｽﾄ	○	○	○	○	○	○	○	○	○	○	○	○	220
TILT GAUGE [VFM39A/(TG,PPC,PR,PRC,MPC)] ﾃｨﾙﾄｹﾞｰｼﾞ	○	○	○	○	○	○	○	○	○	○	○	○	221
LIFT CYLINDER (FRONT)[VFM39A] ﾘﾌﾄｼﾘﾝﾀﾞ(ﾌﾛﾝﾄ)	○	○	○	○	○	○	○	○	○	○	○	○	222
LIFT CYLINDER (REAR) [VFM39A] ﾘﾌﾄｼﾘﾝﾀﾞ(ﾘﾔｰ)	○	○	○	○	○	○	○	○	○	○	○	○	223
MAST PIPING [VFM39A] ﾏｽﾄﾊﾟｲﾋﾟﾝｸﾞ	○	○	○	○	○	○	○	○	○	○	○	○	224

CONTENTS 目次

MAST マスト

a	FG20C6H	c	FG25C6H	e	FG20W6H	g	FD20C6H	i	FD25C6H	k	FD20W6H
b	FG20T6H	d	FG25T6H	f	FG25W6H	h	FD20T6H	j	FD25T6H	l	FD25W6H

SECTION 部門	a	b	c	d	e	f	g	h	i	j	k	l	FIG.NO.
[VFHM39A]													
FORK[VFHM39A] フォーク	○	○	○	○	○	○	○	○	○	○	○	○	225
LIFT BRACKET[VFHM39A] リフトブラケット	○	○	○	○	○	○	○	○	○	○	○	○	226
BACKREST[VFHM91A] バックレスト	○	○	○	○	○	○	○	○	○	○	○	○	227
MAST[VFHM39A] マスト	○	○	○	○	○	○	○	○	○	○	○	○	228
TILT GAUGE[VFHM39A/(TG,PPC,PR,PRC,MPC)] ティルトゲージ	○	○	○	○	○	○	○	○	○	○	○	○	229
LIFT CYLINDER(FRONT)[VFHM39A] リフトシリンダ(フロント)	○	○	○	○	○	○	○	○	○	○	○	○	230
LIFT CYLINDER(REAR)[VFHM39A] リフトシリンダ(リヤー)	○	○	○	○	○	○	○	○	○	○	○	○	231
MAST PIPING[VFHM39A] マストパイピング	○	○	○	○	○	○	○	○	○	○	○	○	232

FIG.1 ENGINE MOUNT (GASOLINE)

(F5H21010) エンジンマウント

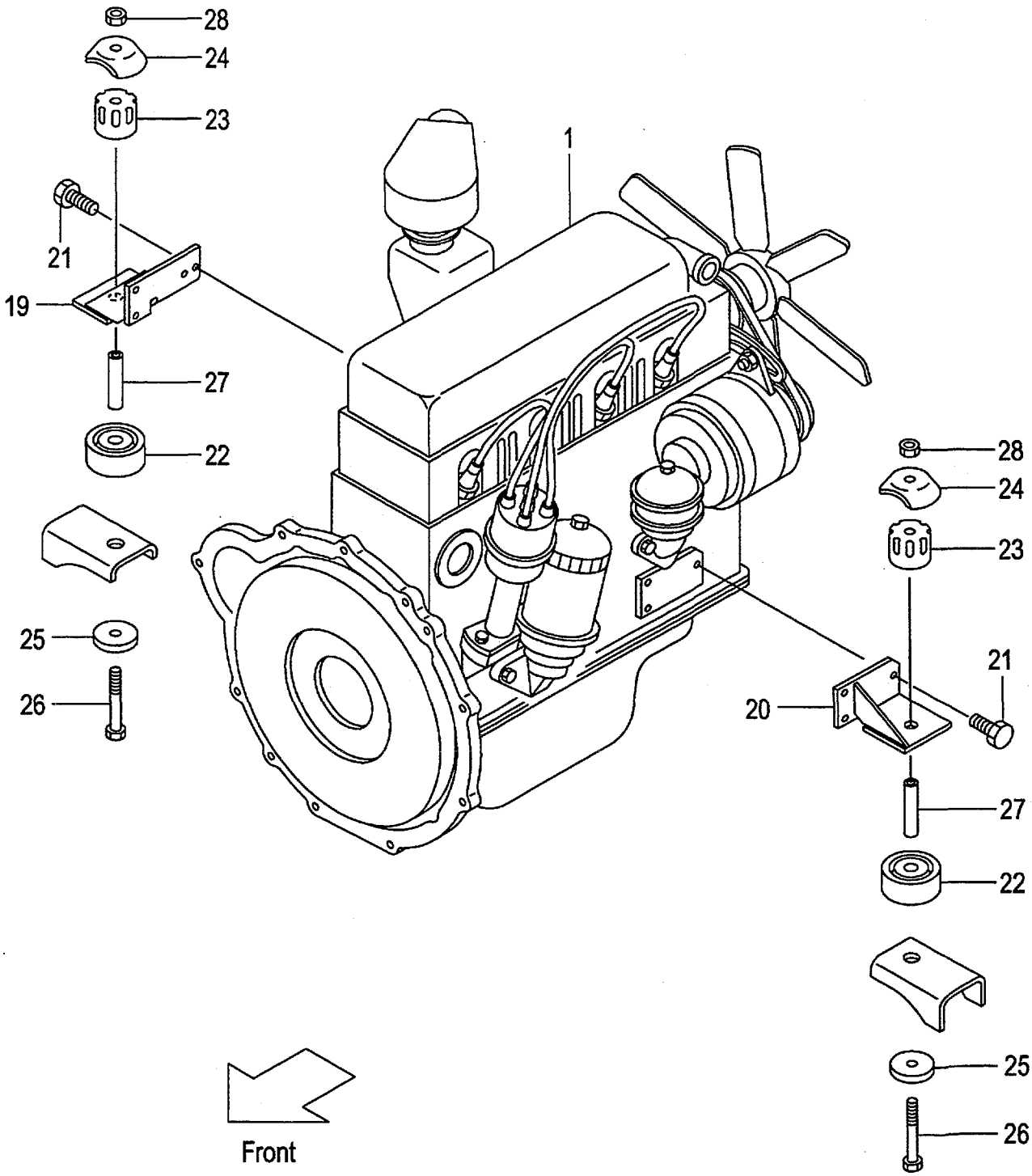

A:FG20C6H FG25C6H
B:FG20T6H FG25T6H
C:FG20W6H FG25W6H

FIG.1
(F5H21010)

Item No	Part No.	Mark	Description		Req'd	Remarks : Serial No.
1	237A1-00101		ENGINE,H25-RMT200	ｴﾝｼﾞﾝ	1	A
-	237B1-00101		ENGINE,H25-RAT200	ｴﾝｼﾞﾝ	1	B
-	237H1-00101		ENGINE,H25	ｴﾝｼﾞﾝ	1	C
-	237H1-00101		ENGINE,H25	ｴﾝｼﾞﾝ	1	B [EXK]
-	537A7-60101		ENGINE,H25-RMT200	ｴﾝｼﾞﾝ	1	A [RCBCR]
-	537B7-60101		ENGINE,H25-RAT200	ｴﾝｼﾞﾝ	1	B [RCBCR]
-	537H7-60101		ENGINE,H25	ｴﾝｼﾞﾝ	1	C [RCBCR]
-	537A1-70101		ENGINE,H25	ｴﾝｼﾞﾝ	1	A [EECG]
-	537B1-70101		ENGINE,H25	ｴﾝｼﾞﾝ	1	B [EECG]
-	537A1-70111		ENGINE,H25	ｴﾝｼﾞﾝ	1	A [EECLP]
-	537B1-70111		ENGINE,H25	ｴﾝｼﾞﾝ	1	B [EECLP]
-	537A4-70101		ENGINE,H25-RMT200	ｴﾝｼﾞﾝ	1	A:15098- [HCS]
-	537B4-70101		ENGINE,H25-RAT200	ｴﾝｼﾞﾝ	1	B:15098- [HCS]
-	537H4-70101		ENGINE,H25	ｴﾝｼﾞﾝ	1	C:15098- [HCS]
2	01400-00008	+	NUT	ﾅｯﾄ	2	
3	02010-00008	+	WASHER	ﾜｯｼｬ	2	
4	02000-00008	+	WASHER	ﾜｯｼｬ	2	
5	01100-05010	+	BOLT	ﾎﾞﾙﾄ	1	
6	02010-00005	+	WASHER	ﾜｯｼｬ	1	
7	01183-08050	+	BOLT	ﾎﾞﾙﾄ	2	A,B [EECG][EECLP]
8	531B2-72071	+	COVER,ECU	ｶﾊﾞｰ	1	A,B [EECG][EECLP]
9	214A2-42611	+	SCREW	ｽｸﾘｭ	1	A,B [EECG][EECLP]
10	518G0-52001	+	BRACKET	ﾌﾞﾗｹｯﾄ	1	A,B [EECLP]
11	531B2-72041	+	TUBE	ﾁｭｰﾌﾞ	1	A,B [EECLP]
12	531B2-72051	+	HOSE,GAS	ﾎｰｽ	1	A,B [EECLP]
13	531B2-72061	+	HOSE,WATER	ﾎｰｽ	2	A,B [EECLP]
14	04911-00016	+	CLIP	ｸﾘｯﾌﾟ	2	A,B [EECLP]
15	04911-00024	+	CLIP	ｸﾘｯﾌﾟ	4	A,B [EECLP]
16	01183-08045	+	BOLT	ﾎﾞﾙﾄ	2	A,B [EECLP]

FIG.1 ENGINE MOUNT (GASOLINE)

(F5H21010) エンジンマウント

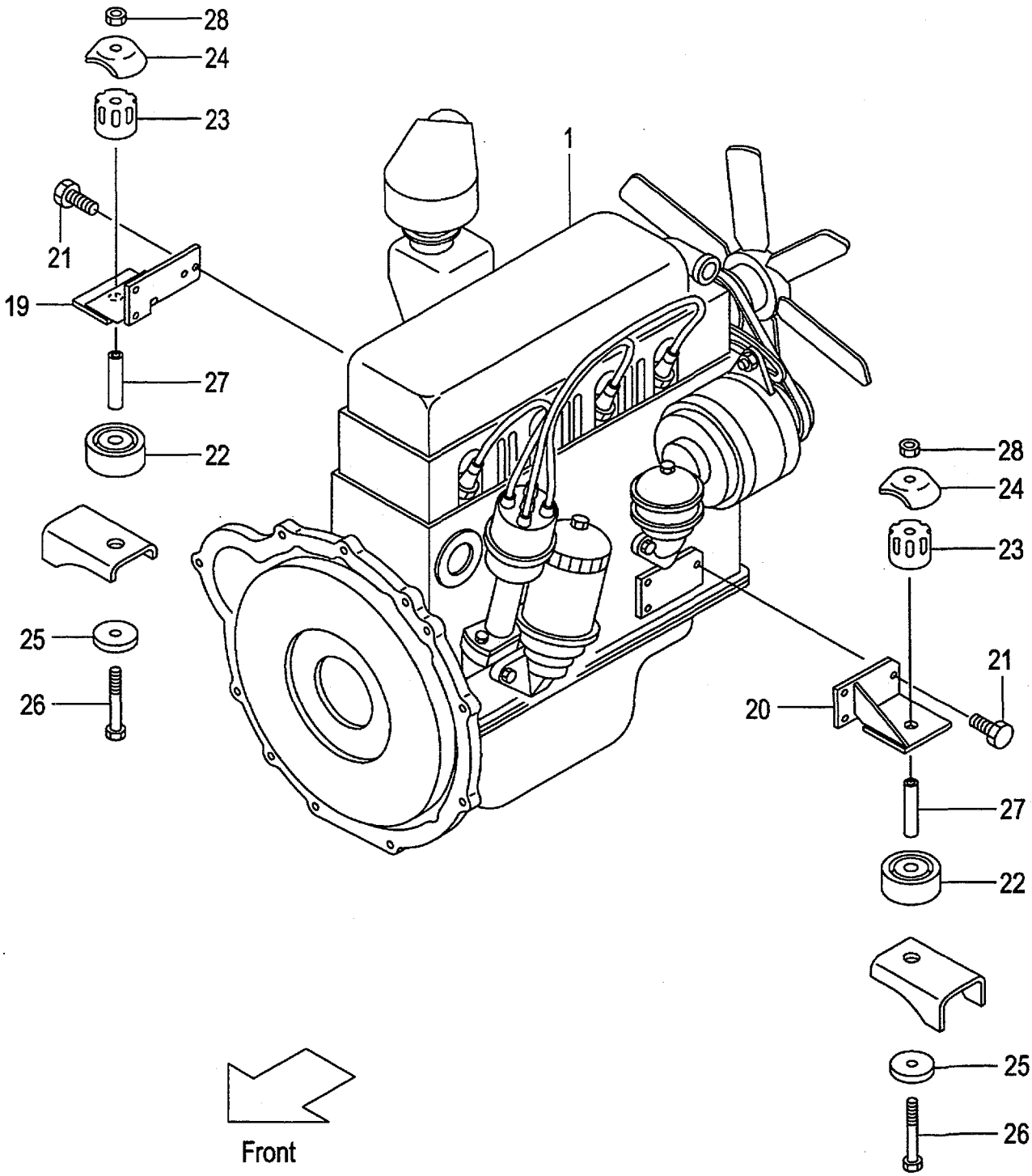

A:FG20C6H FG25C6H
B:FG20T6H FG25T6H
C:FG20W6H FG25W6H

FIG.1
(F5H21010)

Item No	Part No.	Mark	Description		Req'd	Remarks : Serial No.
17	01183-08020	+	BOLT	ﾎﾞﾙﾄ	2	A,B [EECLP]
18	531B2-72091	+	LABEL,FUEL	ﾗﾍﾞﾙ	1	A,B [EECLP]
19	218G1-02351		BRACKET,RH	ﾌﾞﾗｹｯﾄ	1	
20	218G1-02301		BRACKET,LH	ﾌﾞﾗｹｯﾄ	1	
21	01218-10025		BOLT	ﾎﾞﾙﾄ	7	
22	216G1-02111		RUBBER,UNDER	ﾗﾊﾞｰ	2	
23	214A1-02111		RUBBER,UPPER	ﾗﾊﾞｰ	2	
24	214A1-02121		CAP	ｷｬｯﾌﾟ	2	
25	23651-02001		WASHER	ﾜｯｼｬ	2	
26	01103-10097		BOLT	ﾎﾞﾙﾄ	2	
27	234A1-02071		COLLAR	ｶﾗｰ	2	
28	23651-02011		NUT	ﾅｯﾄ	2	
29	533B4-70011	+	KIT,HIGH-COOLING	ﾊｲｸｰﾘﾝｸﾞｷｯﾄ	1	1-15097 [HCS] INC.30
30	226B1-02101	+	PULLEY	ﾌﾟｰﾘ	1	1-15097 [HCS]

FIG.2 ENGINE MOUNT (DIESEL)

(F5H21020) エンジンマウント

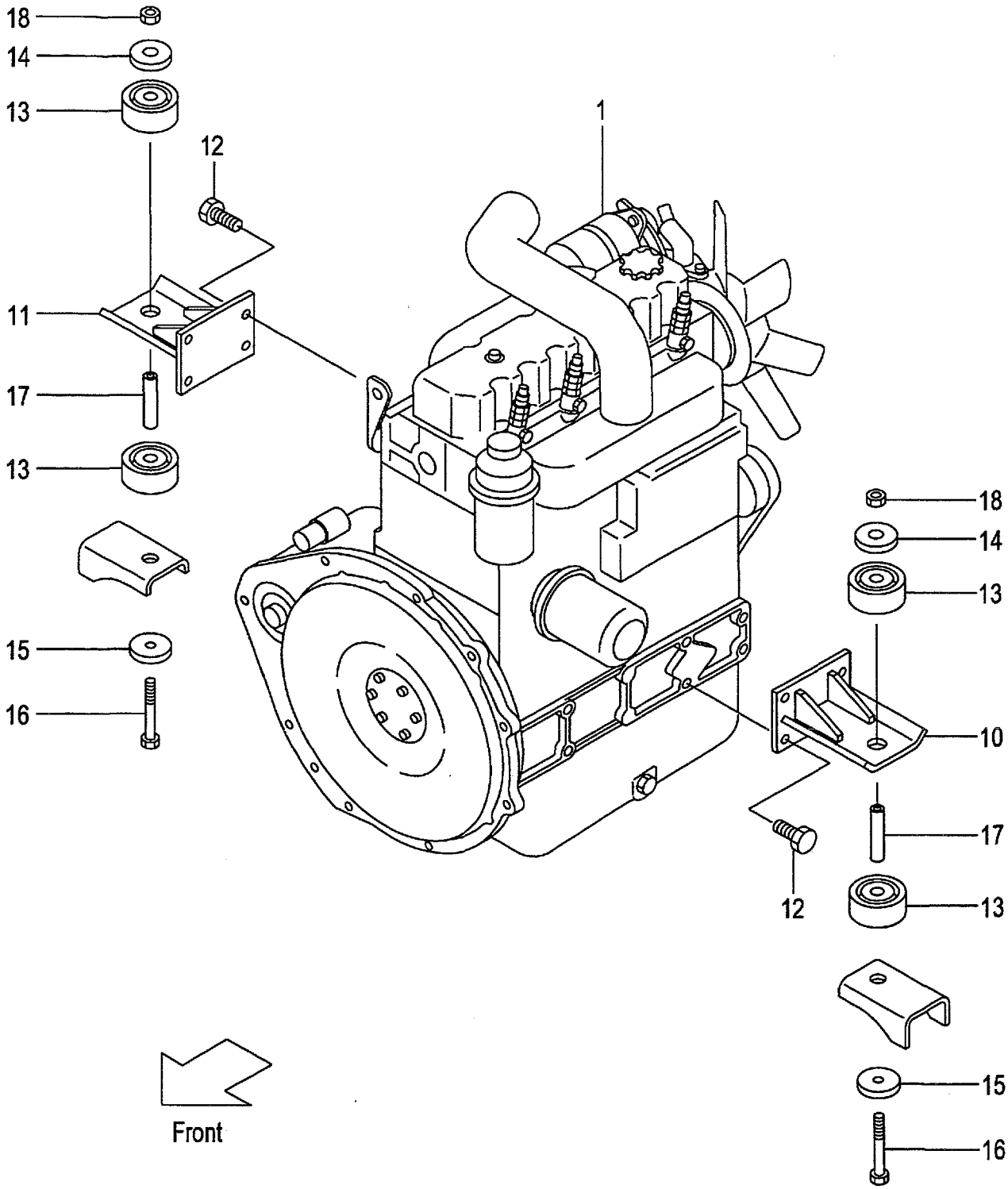

A:FD20C6H FD25C6H
B:FD20T6H FD25T6H
C:FD20W6H FD25W6H

FIG.2
(F5H21020)

Item No	Part No.	Mark	Description		Req'd	Remarks : Serial No.
1	239A1-00101		ENGINE,V3300	ｴﾝｼﾞﾝ	1	A,B
-	239H1-00101		ENGINE,V3300	ｴﾝｼﾞﾝ	1	C
-	539B3-80101		ENGINE,V3300	ｴﾝｼﾞﾝ	1	B [EXE][EXN]
-	539A7-60101		ENGINE,V3300	ｴﾝｼﾞﾝ	1	A,B [RCBCR]
-	539H7-60101		ENGINE,V3300	ｴﾝｼﾞﾝ	1	C [RCBCR]
2	01400-00008	+	NUT	ﾅｯﾄ	1	
3	02010-00008	+	WASHER	ﾜｯｼｬ	1	
4	02000-00008	+	WASHER	ﾜｯｼｬ	1	
5	01100-05010	+	BOLT	ﾎﾞﾙﾄ	1	
6	02010-00005	+	WASHER	ﾜｯｼｬ	1	
7	01400-00006	+	NUT	ﾅｯﾄ	1	
8	02010-00006	+	WASHER	ﾜｯｼｬ	1	
9	02000-00006	+	WASHER	ﾜｯｼｬ	1	
10	239A1-02311		BRACKET,LH	ﾌﾞﾗｹｯﾄ	1	
11	239A1-02301		BRACKET,RH	ﾌﾞﾗｹｯﾄ	1	
12	01219-12030		BOLT	ﾎﾞﾙﾄ	8	
13	216G1-02111		RUBBER	ﾗﾊﾞｰ	4	
14	25782-52041		PLATE	ﾌﾟﾚｰﾄ	2	
15	23651-02001		WASHER	ﾜｯｼｬ	2	
16	01103-10105		BOLT	ﾎﾞﾙﾄ	2	
17	234A1-02071		COLLAR	ｶﾗｰ	2	
18	23651-02011		NUT	ﾅｯﾄ	2	

FIG.3 AIR CLEANER (GASOLINE)

(F5H21030) エアークリーナ

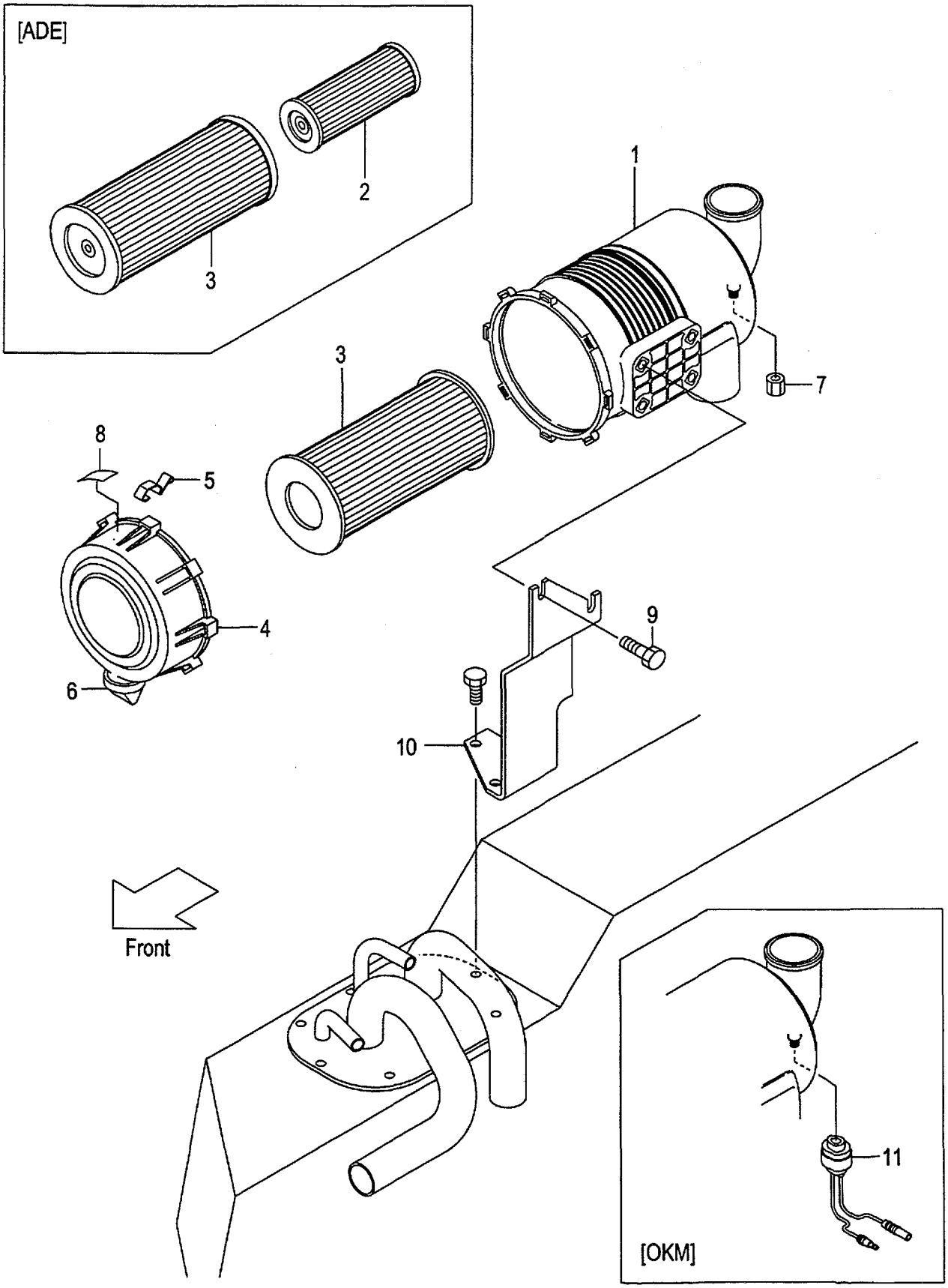

A:FG20C6H FG25C6H
B:FG20T6H FG25T6H
C:FG20W6H FG25W6H

FIG.3
(F5H21030)

Item No	Part No.	Mark	Description		Req'd	Remarks : Serial No.
A1	216G1-02451		CLEANER-ASSY,AIR	ｴｱｰｸﾘｰﾅｱｯｾﾝ	1	INC.1,3-8
-	516G0-60101		CLEANER-ASSY,AIR	ｴｱｰｸﾘｰﾅｱｯｾﾝ	1	[ADE] INC.1-8
1	216G1-02481		BODY	ﾎﾞﾃﾞｨ	1	
2	213T1-02021		ELEMENT,INNER	ｴﾚﾒﾝﾄ	1	[ADE]
3	256C1-08011		ELEMENT,OUTER	ｴﾚﾒﾝﾄ	1	
-	213T1-02011		ELEMENT,OUTER	ｴﾚﾒﾝﾄ	1	[ADE]
4	216G1-02461		COVER	ｶﾊﾞｰ	1	
5	216G1-02471		LATCH	ﾗｯﾁ	3	
6	216G1-02491		VALVE,VACUATOR	ﾊﾞﾙﾌﾞ	1	
7	53651-12551		CAP,NIPPLE	ｷｬｯﾌﾟ	1	
8	216G1-02501		LABEL	ﾗﾍﾞﾙ	1	
-	516G0-62011		LABEL	ﾗﾍﾞﾙ	1	[ADE]
9	01183-08016		BOLT	ﾎﾞﾙﾄ	2	
10	237A1-02101		BRACKET,AIR-CLEANER	ﾌﾞﾗｹｯﾄ	1	A,B
-	237H1-02001		BRACKET,AIR-CLEANER	ﾌﾞﾗｹｯﾄ	1	C
-	237H1-02001		BRACKET,AIR-CLEANER	ﾌﾞﾗｹｯﾄ	1	A [PC][PC/POB]
-	237H1-02001		BRACKET,AIR-CLEANER	ﾌﾞﾗｹｯﾄ	1	A,B [POB]
11	54612-42021		SENSOR,635MM	ｾﾝｻ	1	[OKM]

FIG.4 AIR CLEANER (DIESEL)

(F5H21050) エアークリーナ

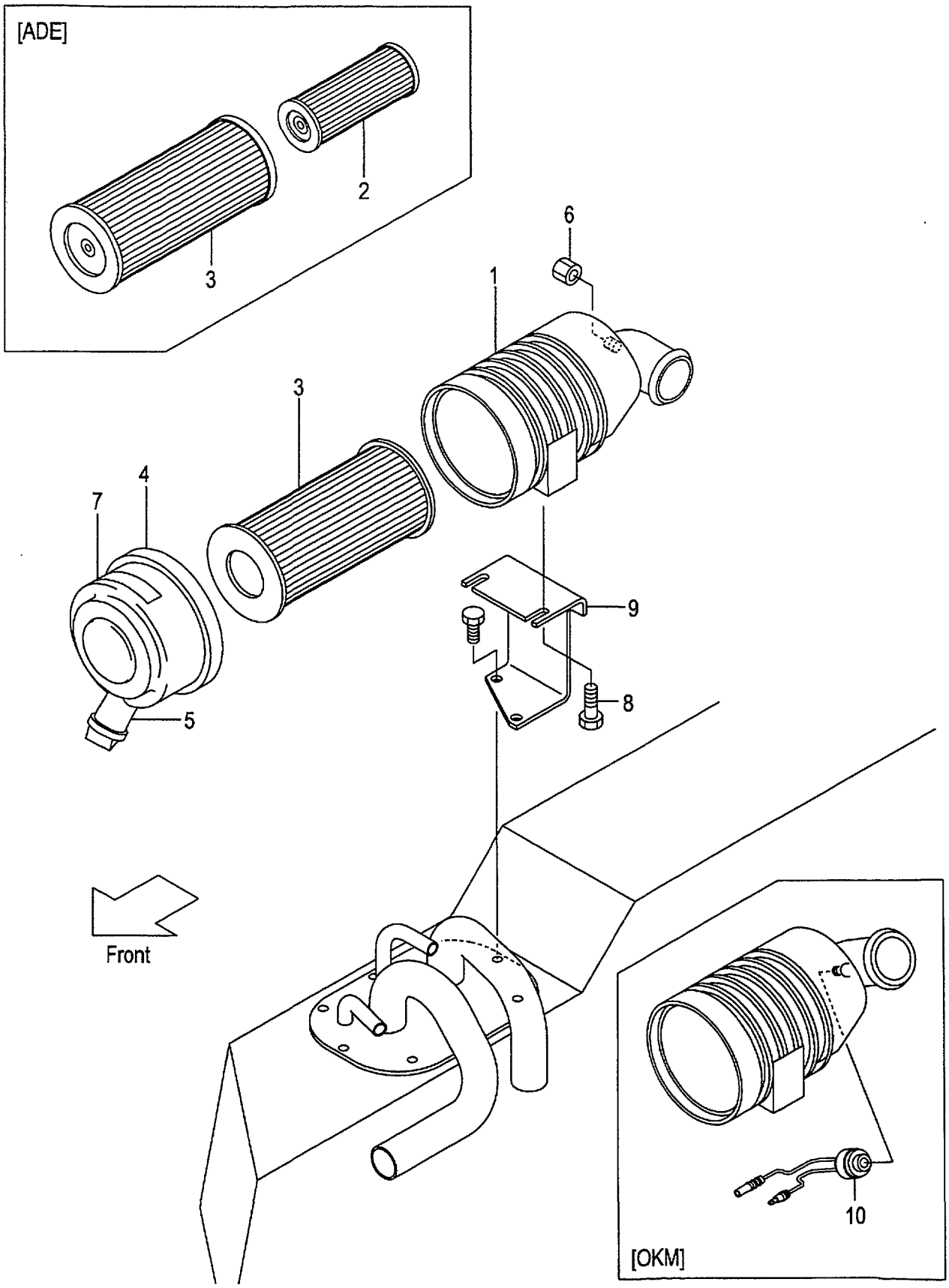

A:FD20C6H FD25C6H
B:FD20T6H FD25T6H
C:FD20W6H FD25W6H

FIG.4
(F5H21050)

Item No	Part No.	Mark	Description		Req'd	Remarks : Serial No.
A1	234A1-00101		CLEANER-ASSY,AIR	ｴｱｰｸﾘｰﾅｱｯｾﾝ	1	INC.1,3-7
-	534A0-60011		CLEANER-ASSY,AIR	ｴｱｰｸﾘｰﾅｱｯｾﾝ	1	[ADE] INC.1-7
1	234A1-00111		BODY	ﾎﾞﾃﾞｨ	1	
2	534A0-62011		ELEMENT,INNER	ｴﾚﾒﾝﾄ	1	[ADE]
3	256G1-08011		ELEMENT,OUTER	ｴﾚﾒﾝﾄ	1	
-	534A0-62001		ELEMENT,OUTER	ｴﾚﾒﾝﾄ	1	[ADE]
4	256G1-08021		COVER	ｶﾊﾞｰ	1	
5	256A1-08031		VALVE,VACUATOR	ﾊﾞﾙﾌﾞ	1	
6	53651-12551		CAP,NIPPLE	ｷｬｯﾌﾟ	1	
7	234A1-00121		LABEL	ﾗﾍﾞﾙ	1	
-	516G0-62001		LABEL	ﾗﾍﾞﾙ	1	[ADE]
8	01183-08016		BOLT	ﾎﾞﾙﾄ	2	
9	239A1-02511		BRACKET,AIR-CLEANER	ﾌﾞﾗｹｯﾄ	1	A,B
-	239H1-02001		BRACKET,AIR-CLEANER	ﾌﾞﾗｹｯﾄ	1	C
-	239H1-02001		BRACKET,AIR-CLEANER	ﾌﾞﾗｹｯﾄ	1	A [PC][PC/POB]
-	239H1-02001		BRACKET,AIR-CLEANER	ﾌﾞﾗｹｯﾄ	1	A,B [POB]
10	522A1-10201		SENSOR,762MM	ｾﾝｻ	1	[OKM]

FIG.5 AIR DUCT (GASOLINE)

(F5H21060) エアーダクト

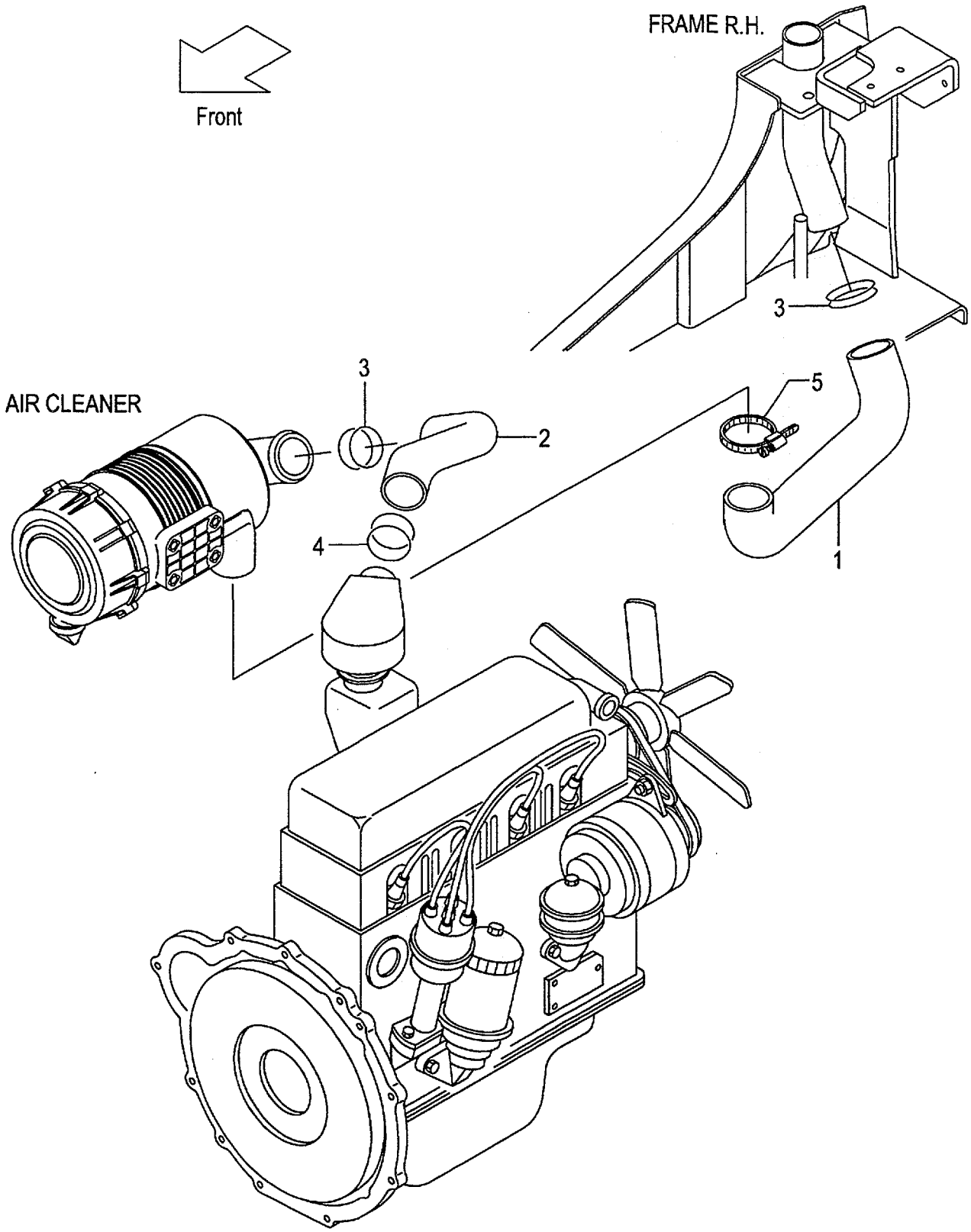

FIG.5

(F5H21060)

A:FG20C6H FG20T6H FG25C6H FG25T6H FG20W6H FG25W6H

Item No	Part No.	Mark	Description	Req'd	Remarks : Serial No.
1	218G1-02101		HOSE,AIR-DUCT ホース	1	
2	233A1-02001		HOSE,AIR-INTAKE ホース	1	
3	04911-00060		CLIP ｸﾘｯﾌﾟ	2	
4	04911-00065		CLIP ｸﾘｯﾌﾟ	1	
5	224W4-52071		BAND ﾊﾞﾝﾄﾞ	1	

FIG.6 AIR DUCT (DIESEL)

(F5H21080) エアーダクト

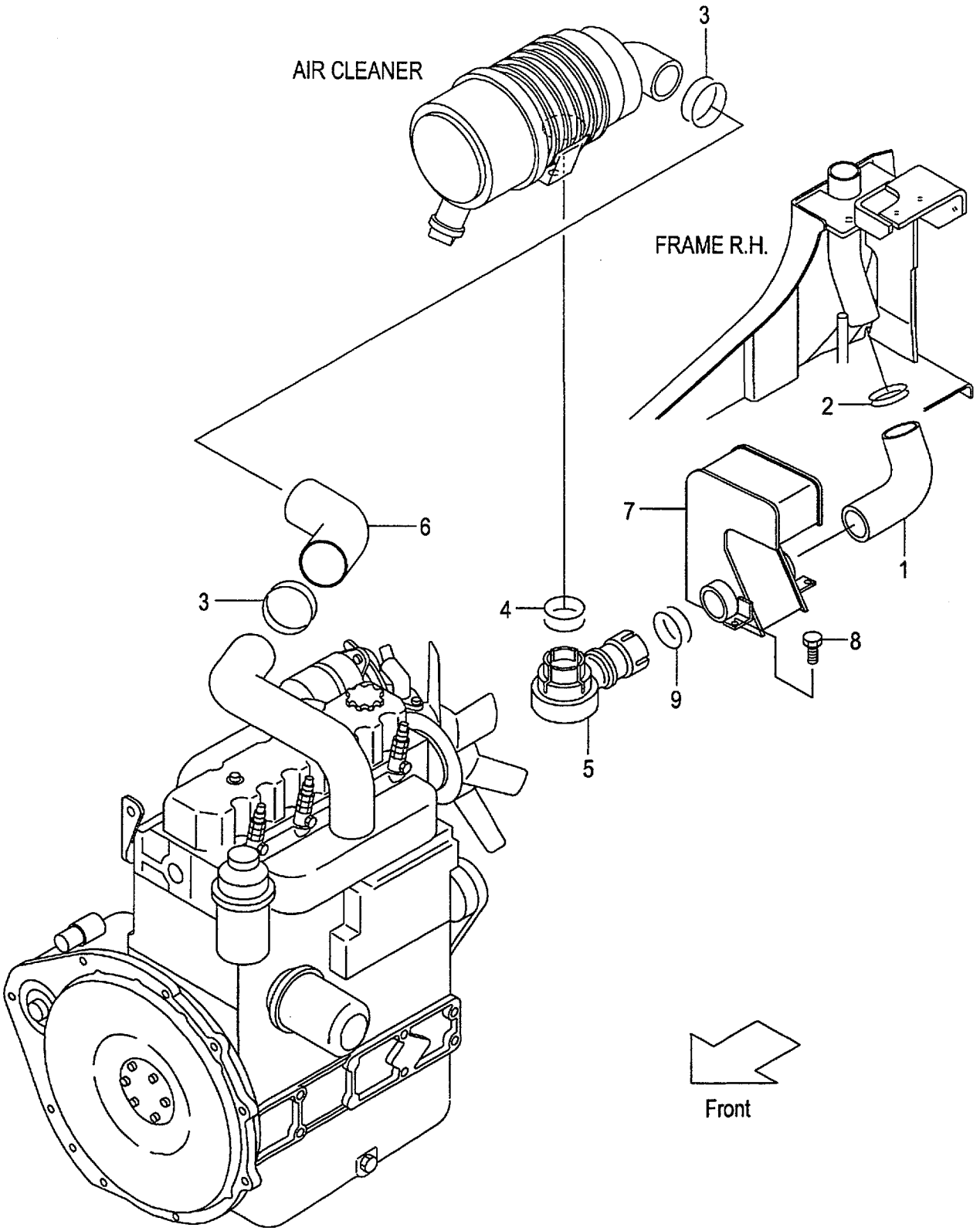

FIG.6

(F5H21080)

A:FD20C6H FD20T6H FD25C6H FD25T6H FD20W6H FD25W6H

Item No	Part No.	Mark	Description		Req'd	Remarks : Serial No.
1	217M1-02031		HOSE,AIR-DUCT	ﾎｰｽ	1	
2	04911-00060		CLIP	ｸﾘｯﾌﾟ	1	
3	04911-00075		CLIP	ｸﾘｯﾌﾟ	2	
4	04911-00070		CLIP	ｸﾘｯﾌﾟ	1	
5	234A1-02001		INTAKE,AIR	ｲﾝﾃｰｸ	1	
6	239A1-02501		HOSE,AIR-INTAKE	ﾎｰｽ	1	
7	217M1-02402		RESONATOR	ﾚｿﾞﾈｰﾀ	1	
8	01185-08016		BOLT	ﾎﾞﾙﾄ	2	
9	04911-00055		CLIP	ｸﾘｯﾌﾟ	1	

FIG.7 PRE CLEANER [CAKB]

(F5H21090) ﾌﾟﾚｸﾘｰﾅ

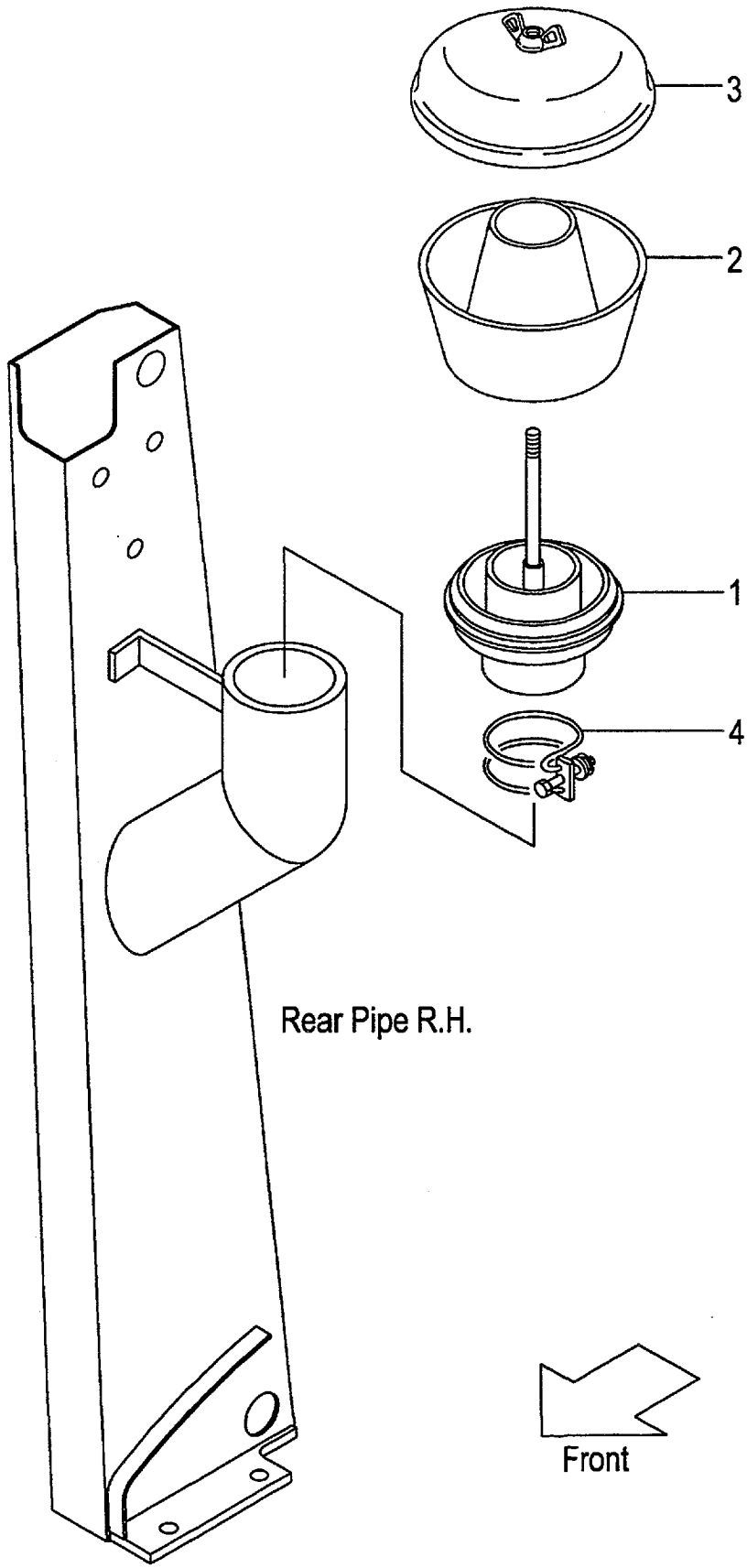

A:FG20C6H FG20T6H FG25C6H FG25T6H FG20W6H FG25W6H
B:FD20C6H FD20T6H FD25C6H FD25T6H FD20W6H FD25W6H

FIG.7
(F5H21090)

Item No	Part No.	Mark	Description		Req'd	Remarks : Serial No.
A1	522B0-92021		CLEANER-ASSY,PRE	ﾌﾟﾚｸﾘｰﾅｱｯｾﾝ	1	[CAKB] INC.1-3
1	522B0-92031		SLEEVE	ｽﾘｰﾌﾞ	1	[CAKB]
2	522B0-92041		BODY	ﾎﾞﾃﾞｨ	1	[CAKB]
3	522B0-92051		COVER	ｶﾊﾞｰ	1	[CAKB]
4	04911-00090		CLIP	ｸﾘｯﾌﾟ	1	[CAKB]

FIG.8 COOLING UNIT (GASOLINE)

(F5H22110) クーリング゛ユニット

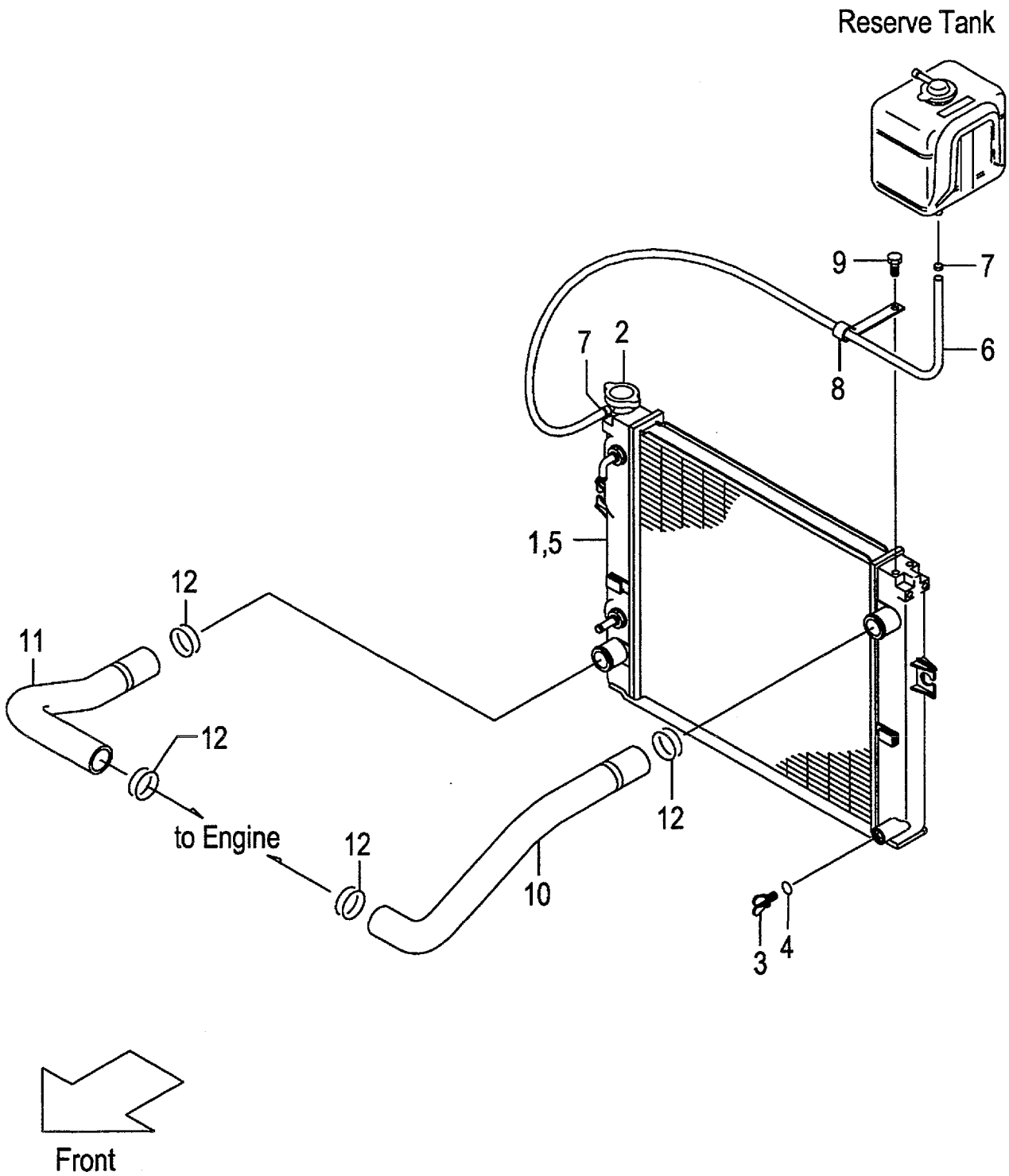

A:FG20C6H FG25C6H
B:FG20T6H FG25T6H
C:FG20W6H FG25W6H

FIG.8
(F5H22110)

Item No	Part No.	Mark	Description		Req'd	Remarks : Serial No.
A1	237A2-10101		RADIATOR-ASSY	ﾗｼﾞｴｰﾀｱｯｾﾝ	1	A INC.1-7
-	237B2-10101		RADIATOR-ASSY	ﾗｼﾞｴｰﾀｱｯｾﾝ	1	B INC.1-7
-	237H2-10101		RADIATOR-ASSY	ﾗｼﾞｴｰﾀｱｯｾﾝ	1	C INC.1-7
-	537A6-60301		RADIATOR-ASSY	ﾗｼﾞｴｰﾀｱｯｾﾝ	1	A,C [RADPF][HCS][EXK] INC.1-7
-	539A6-60301		RADIATOR-ASSY	ﾗｼﾞｴｰﾀｱｯｾﾝ	1	B [RADPF][HCS][EXK] INC.1-7
1	NO PART NO.	#	RADIATOR	ﾗｼﾞｴｰﾀ	1	
2	222A2-10211		CAP	ｷｬｯﾌﾟ	1	
3	234A2-12201		COCK	ｺｯｸ	1	
4	234A2-12211		O-RING	Oﾘﾝｸﾞ	1	
5	NO PART NO.	#	NUT	ﾅｯﾄ	3	A
-	NO PART NO.	#	NUT	ﾅｯﾄ	4	B,C
-	NO PART NO.	#	NUT	ﾅｯﾄ	4	[RADPF][HCS][EXK]
6	218M2-12301		HOSE	ﾎｰｽ	1	
7	23772-12071		CLIP	ｸﾘｯﾌﾟ	2	
8	214A2-42331		CLIP	ｸﾘｯﾌﾟ	1	
9	01185-08016		BOLT	ﾎﾞﾙﾄ	1	
10	237A2-12001		HOSE,UPPER	ﾎｰｽ	1	
11	237A2-12011		HOSE,LOWER	ﾎｰｽ	1	
12	04911-00044		CLIP	ｸﾘｯﾌﾟ	4	

FIG.9 COOLING UNIT (DIESEL:CLUTCH)

(F5H22130) クーリング゛ユニット

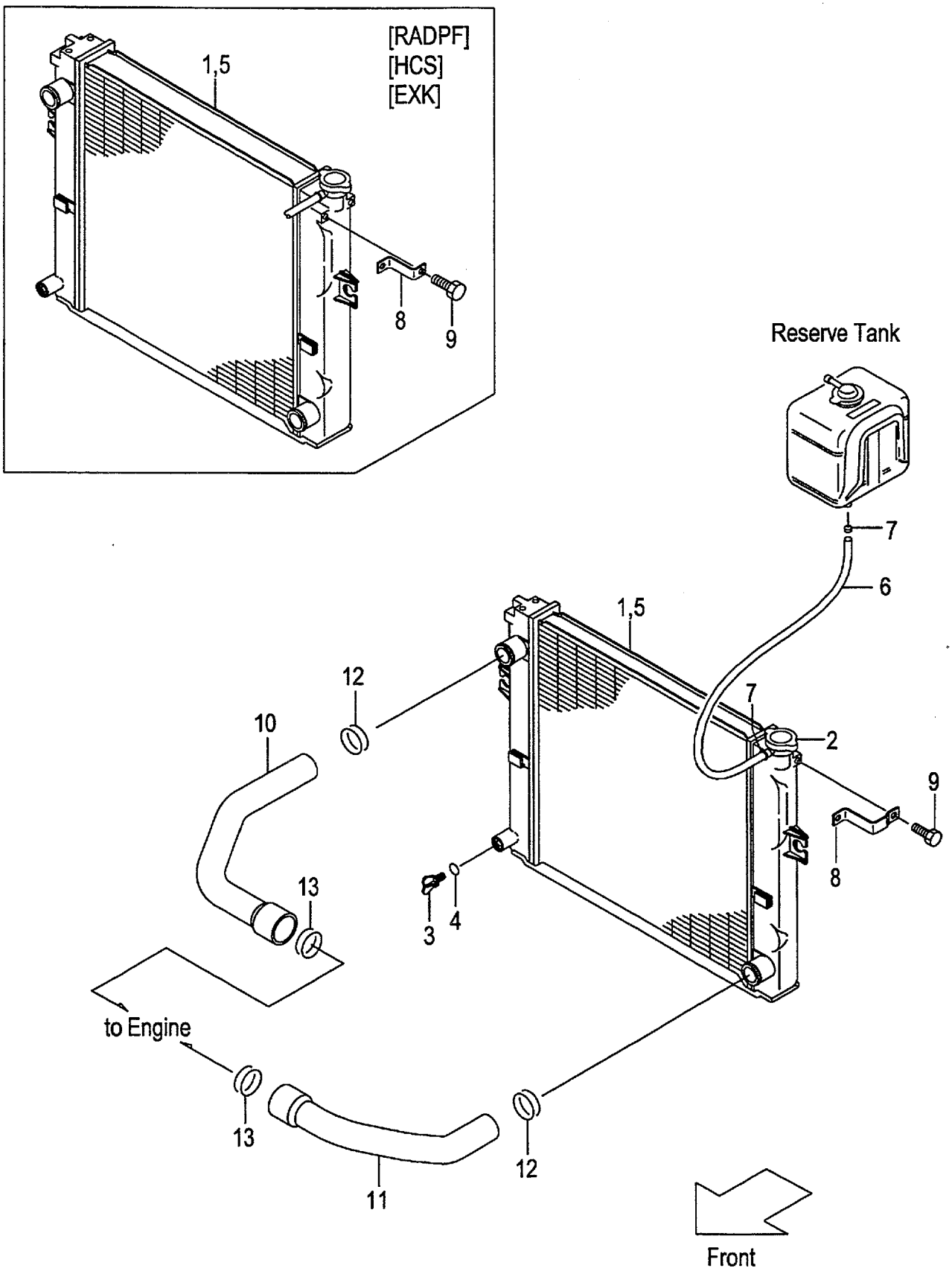

FIG.9
(F5H22130)

A:FD20C6H FD25C6H

Item No	Part No.	Mark	Description		Req'd	Remarks : Serial No.
A1	239A2-10101		RADIATOR-ASSY	ﾗｼﾞｴｰﾀｱｯｾﾝ	1	INC.1-7
-	539A6-60301		RADIATOR-ASSY	ﾗｼﾞｴｰﾀｱｯｾﾝ	1	[RADPF][HCS][EXK] INC.1-7
1	NO PART NO.	#	RADIATOR	ﾗｼﾞｴｰﾀ	1	
2	222A2-10211		CAP	ｷｬｯﾌﾟ	1	
3	234A2-12201		COCK	ｺｯｸ	1	
4	234A2-12211		O-RING	Oﾘﾝｸﾞ	1	
5	NO PART NO.	#	NUT	ﾅｯﾄ	3	
-	NO PART NO.	#	NUT	ﾅｯﾄ	4	[RADPF][HCS][EXK]
6	219M2-12301		HOSE	ﾎｰｽ	1	
7	23772-12071		CLIP	ｸﾘｯﾌﾟ	2	
8	239A2-12141		BRACKET	ﾌﾞﾗｹｯﾄ	1	
-	239B2-12141		BRACKET	ﾌﾞﾗｹｯﾄ	1	[RADPF][HCS][EXK]
9	01185-08016		BOLT	ﾎﾞﾙﾄ	1	
10	239A2-12001		HOSE,UPPER	ﾎｰｽ	1	
11	239A2-12011		HOSE,LOWER	ﾎｰｽ	1	
12	04911-00044		CLIP	ｸﾘｯﾌﾟ	2	
13	04911-00055		CLIP	ｸﾘｯﾌﾟ	2	

FIG.10 COOLING UNIT (DIESEL:TOR-CON & OIL CLUTCH)

(F5H22150) クーリング゛ユニット

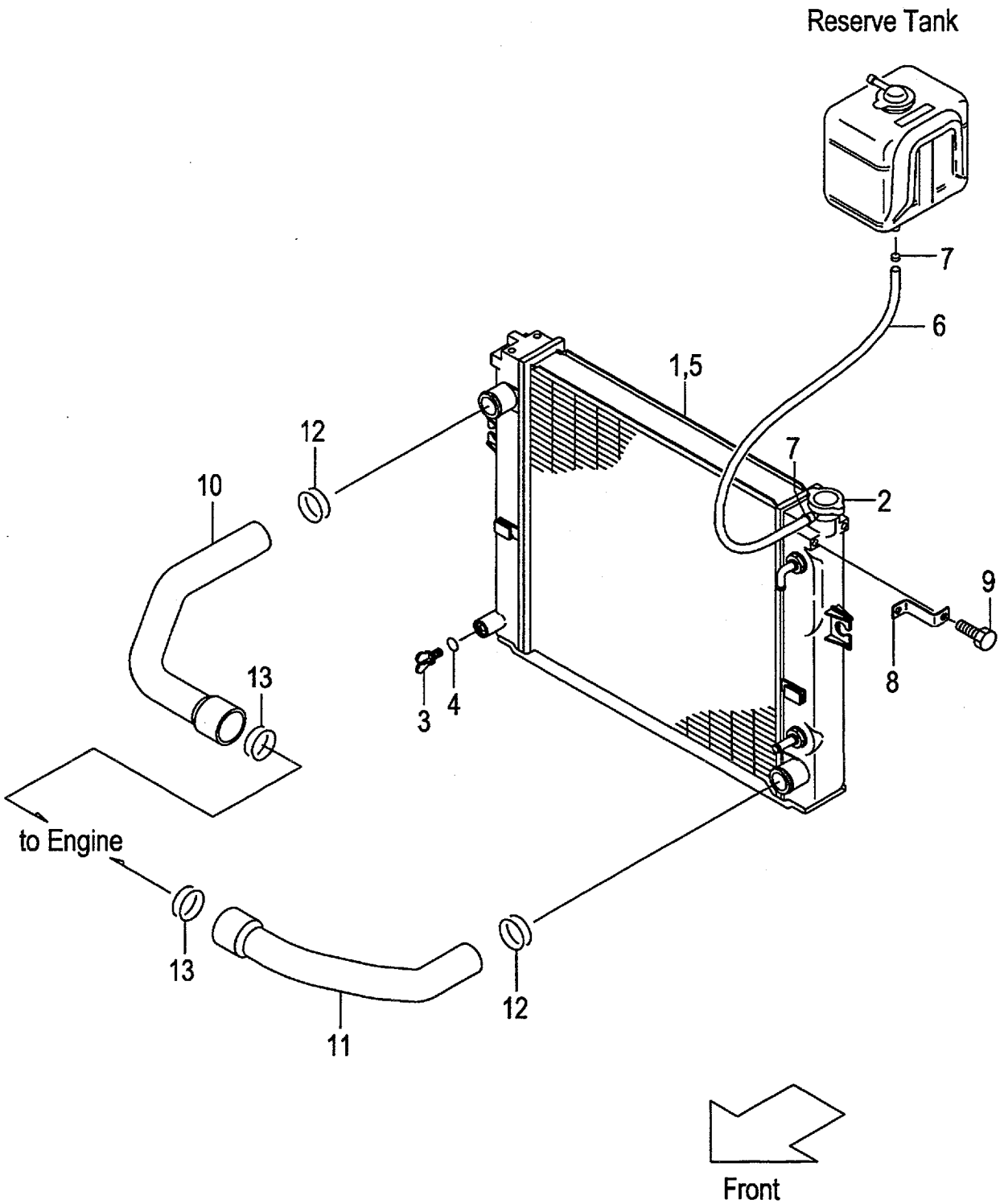

A:FD20T6H FD25T6H
B:FD20W6H FD25W6H

FIG.10
(F5H22150)

Item No	Part No.	Mark	Description		Req'd	Remarks : Serial No.
A1	239B2-10101		RADIATOR-ASSY	ﾗｼﾞｴｰﾀｱｯｾﾝ	1	A INC.1-7
-	239H2-10101		RADIATOR-ASSY	ﾗｼﾞｴｰﾀｱｯｾﾝ	1	B INC.1-7
-	538B6-60301		RADIATOR-ASSY	ﾗｼﾞｴｰﾀｱｯｾﾝ	1	A [RADPF][HCS][EXK] INC.1-7
-	539A6-60301		RADIATOR-ASSY	ﾗｼﾞｴｰﾀｱｯｾﾝ	1	B [RADPF][HCS][EXK] INC.1-7
1	NO PART NO.	#	RADIATOR	ﾗｼﾞｴｰﾀ	1	
2	222A2-10211		CAP	ｷｬｯﾌﾟ	1	
3	234A2-12201		COCK	ｺｯｸ	1	
4	234A2-12211		O-RING	Oﾘﾝｸﾞ	1	
5	NO PART NO.	#	NUT	ﾅｯﾄ	4	
6	219M2-12301		HOSE	ﾎｰｽ	1	
7	23772-12071		CLIP	ｸﾘｯﾌﾟ	2	
8	239B2-12141		BRACKET	ﾌﾞﾗｹｯﾄ	1	
9	01185-08016		BOLT	ﾎﾞﾙﾄ	1	
10	239A2-12001		HOSE,UPPER	ﾎｰｽ	1	
11	239A2-12011		HOSE,LOWER	ﾎｰｽ	1	
12	04911-00044		CLIP	ｸﾘｯﾌﾟ	2	
13	04911-00055		CLIP	ｸﾘｯﾌﾟ	2	

FIG.11 RADIATOR PARTS & RESERVE TANK

(F5H22160) ﾗｼﾞｴｰﾀﾊﾟｰﾂ&ﾘｻﾞｰﾌﾞﾀﾝｸ

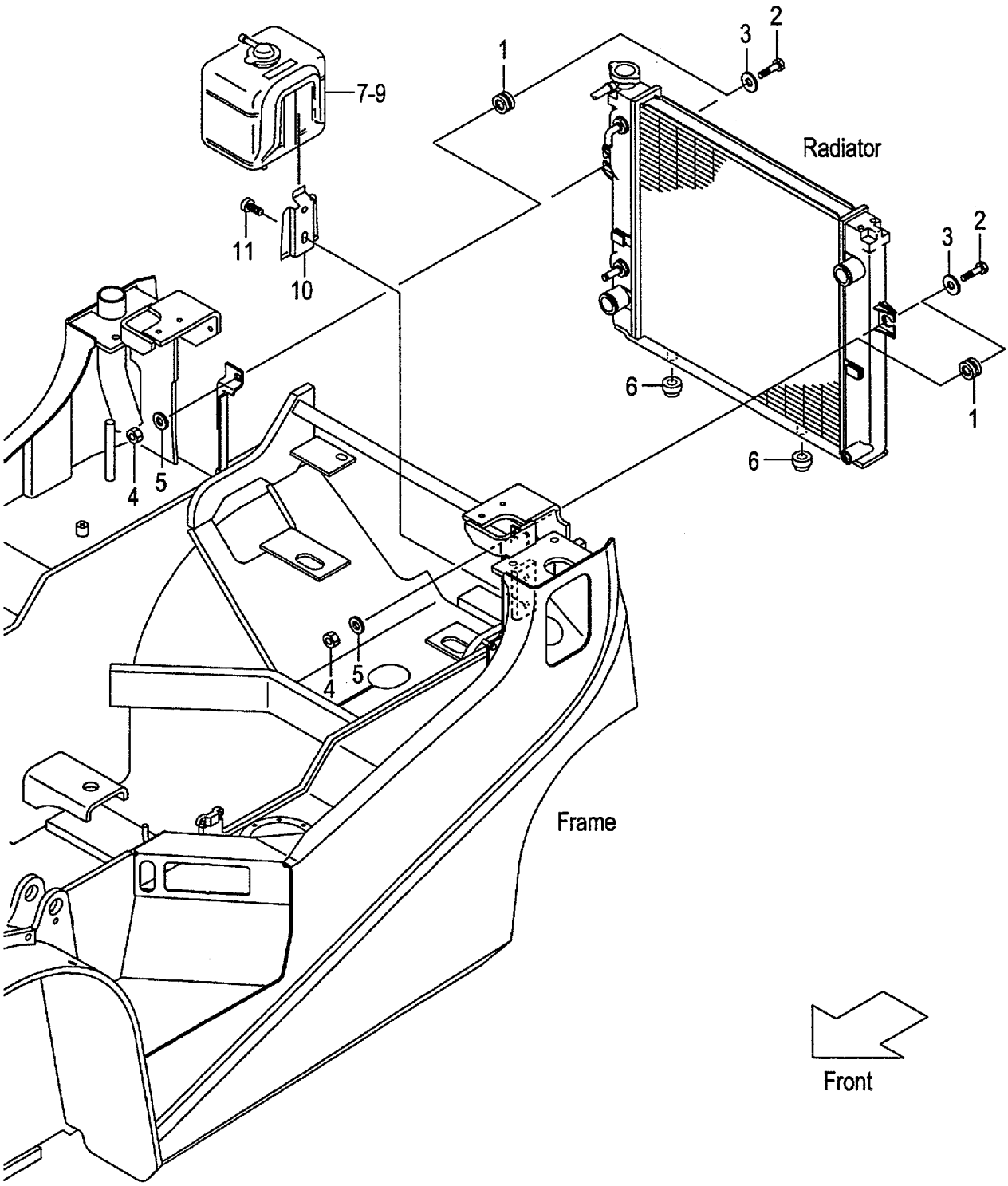

FIG.11
(F5H22160)

A:FG20C6H FG20T6H FG25C6H FG25T6H FG20W6H FG25W6H
B:FD20C6H FD20T6H FD25C6H FD25T6H FD20W6H FD25W6H

Item No	Part No.	Mark	Description		Req'd	Remarks : Serial No.
1	214A2-12001		RUBBER	ﾗﾊﾞｰ	2	
2	214A2-12021		BOLT	ﾎﾞﾙﾄ	2	
3	22252-32251		WASHER	ﾜｯｼｬ	2	
4	23652-12051		NUT	ﾅｯﾄ	2	
5	02000-00010		WASHER	ﾜｯｼｬ	2	
6	214A2-12011		RUBBER	ﾗﾊﾞｰ	2	
7	214A2-12111		TANK,RESERVE	ﾀﾝｸ	1	INC.8,9
-	214A2-12121		TANK,RESERVE	ﾀﾝｸ	1	[OKM] INC.8,9
8	214A2-13001		CAP	ｷｬｯﾌﾟ	1	
9	214A2-13011		PACKING	ﾊﾟｯｷﾝｸﾞ	1	
10	214A2-12141		BRACKET	ﾌﾞﾗｹｯﾄ	1	
11	214A2-42611		SCREW	ｽｸﾘｭ	2	

FIG.12 FAN SHROUD (GASOLINE:CLUTCH & TOR-CON)

(F5H22170) ﾌｧﾝｼｭﾗｳﾄﾞ

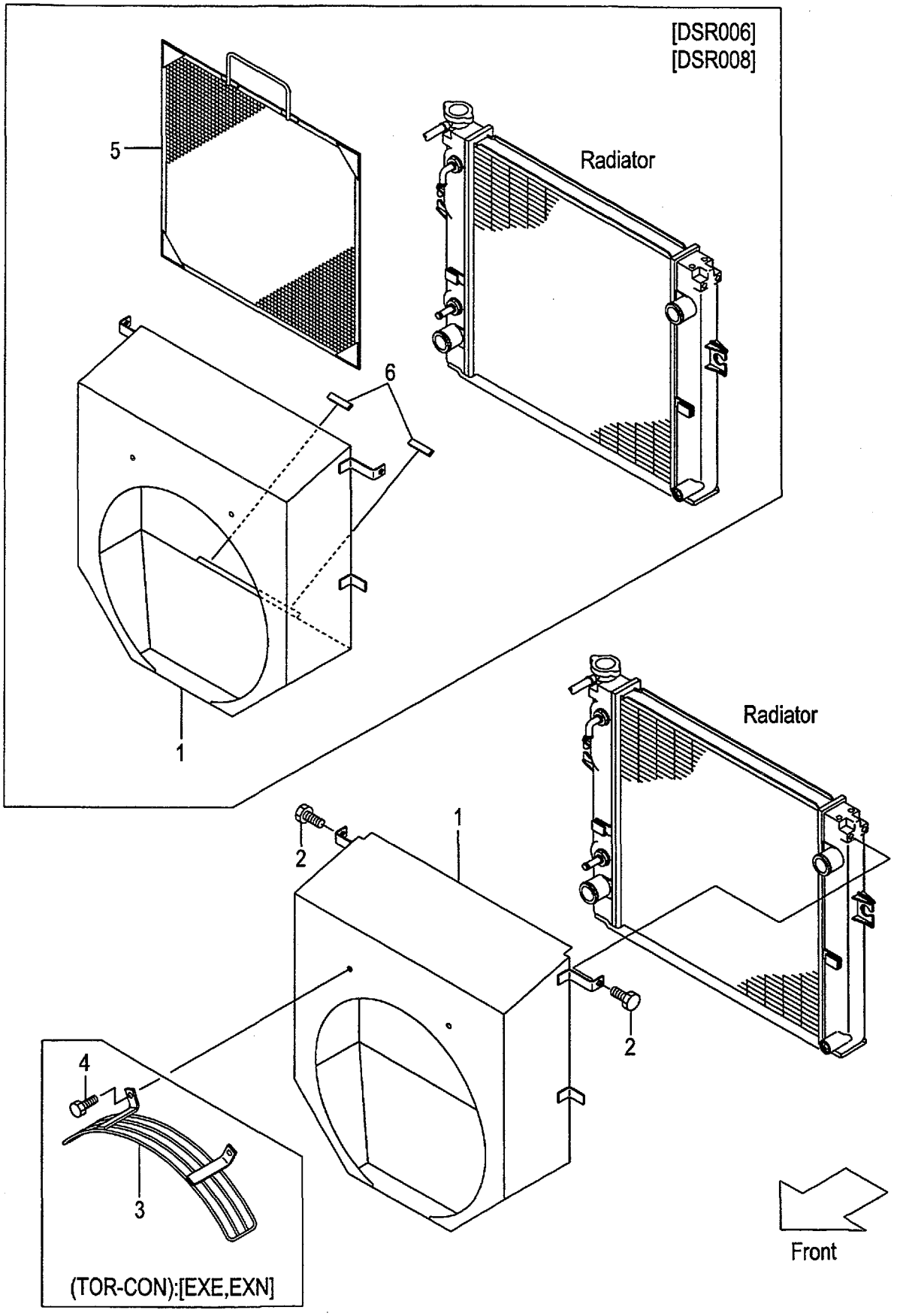

A:FG20C6H FG25C6H
B:FG20T6H FG25T6H

FIG.12
(F5H22170)

Item No	Part No.	Mark	Description		Req'd	Remarks : Serial No.
1	237A2-12201		SHROUD,FAN	ｼｭﾗｳﾄﾞ	1	
-	237E2-12201		SHROUD,FAN	ｼｭﾗｳﾄﾞ	1	B [EXK]
-	537A6-52001		SHROUD,FAN	ｼｭﾗｳﾄﾞ	1	[DSR006][DSR008]
-	537E6-52001		SHROUD,FAN	ｼｭﾗｳﾄﾞ	1	B [EXK/DSR006][EXK/DSR008]
2	01185-08016		BOLT	ﾎﾞﾙﾄ	2	
3	532B3-82201		GUARD,FAN	ｶﾞｰﾄﾞ	1	B [EXE][EXN]
4	01185-08020		BOLT	ﾎﾞﾙﾄ	2	B [EXE][EXN]
5	539A6-52051		SCREEN,DUST	ｽｸﾘｰﾝ	1	[DSR006]
-	539A6-52151		SCREEN,DUST	ｽｸﾘｰﾝ	1	[DSR008]
6	209P6-42831		EDGING	ｴｯｼﾞﾝｸﾞ	2	[DSR006][DSR008]

FIG.13 FAN SHROUD (GASOLINE:OIL CLUTCH)

(F5H22180) ﾌｧﾝｼｭﾗｳﾄﾞ

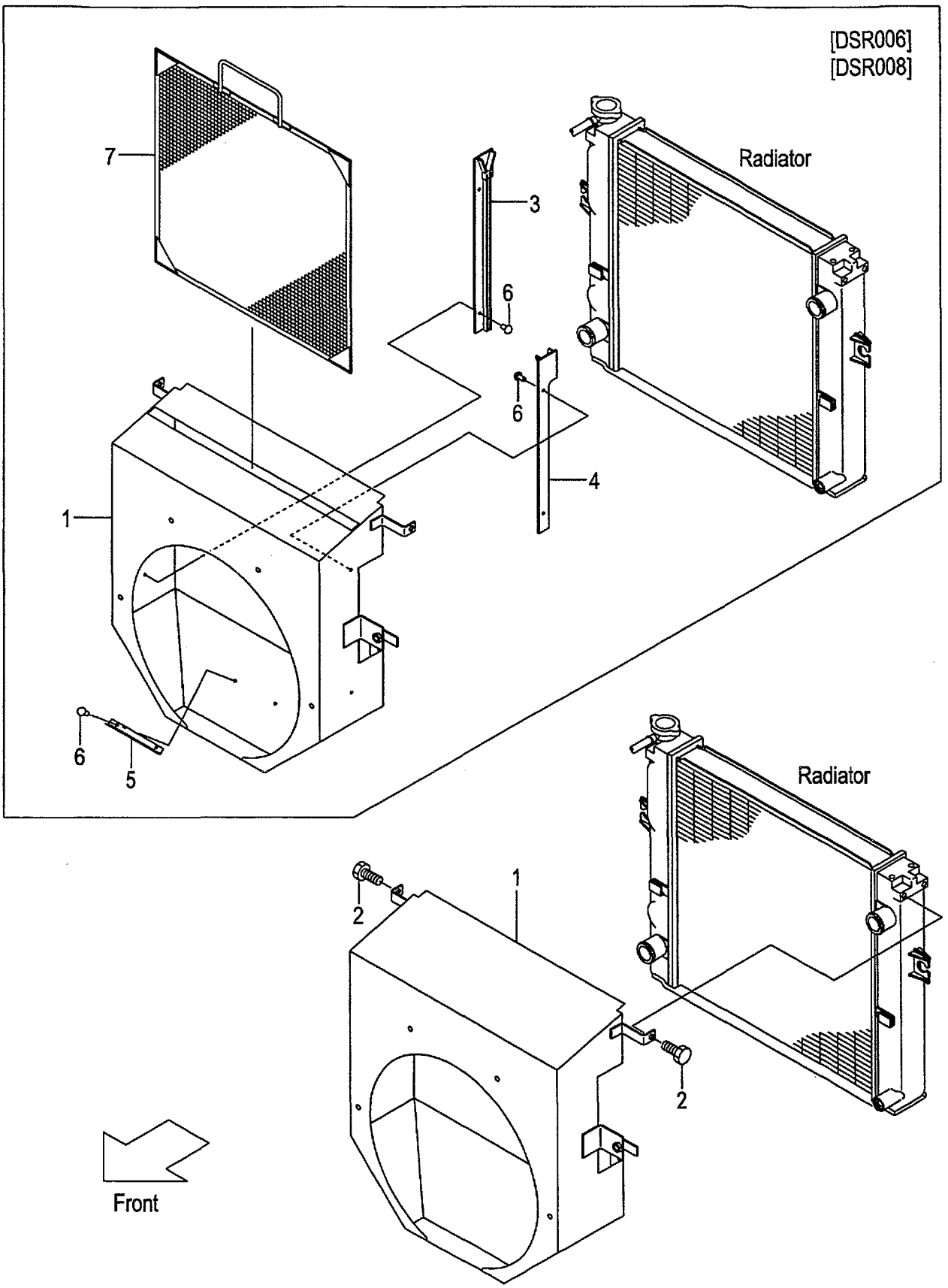

FIG.13
(F5H22180)

A:FG20W6H FG25W6H

Item No	Part No.	Mark	Description		Req'd	Remarks : Serial No.
1	237H2-12201		SHROUD,FAN	ｼｭﾗｳﾄﾞ	1	
-	537H6-52001		SHROUD,FAN	ｼｭﾗｳﾄﾞ	1	[DSR006][DSR008]
2	01185-08016		BOLT	ﾎﾞﾙﾄ	2	
3	539H6-52251		GUIDE,RH	ｶﾞｲﾄﾞ	1	[DSR006][DSR008]
4	539H6-52351		GUIDE,LH	ｶﾞｲﾄﾞ	1	[DSR006][DSR008]
5	532N6-52011		GUIDE,LOWER	ｶﾞｲﾄﾞ	1	[DSR006][DSR008]
6	22256-42001		RIVET	ﾘﾍﾞｯﾄ	6	[DSR006][DSR008]
7	539H6-52051		SCREEN,DUST	ｽｸﾘｰﾝ	1	[DSR006]
-	539H6-52151		SCREEN,DUST	ｽｸﾘｰﾝ	1	[DSR008]

FIG.14 FAN SHROUD (DIESEL:CLUTCH & TOR-CON)

(F5H221A0) ﾌｧﾝｼｭﾗｳﾄﾞ

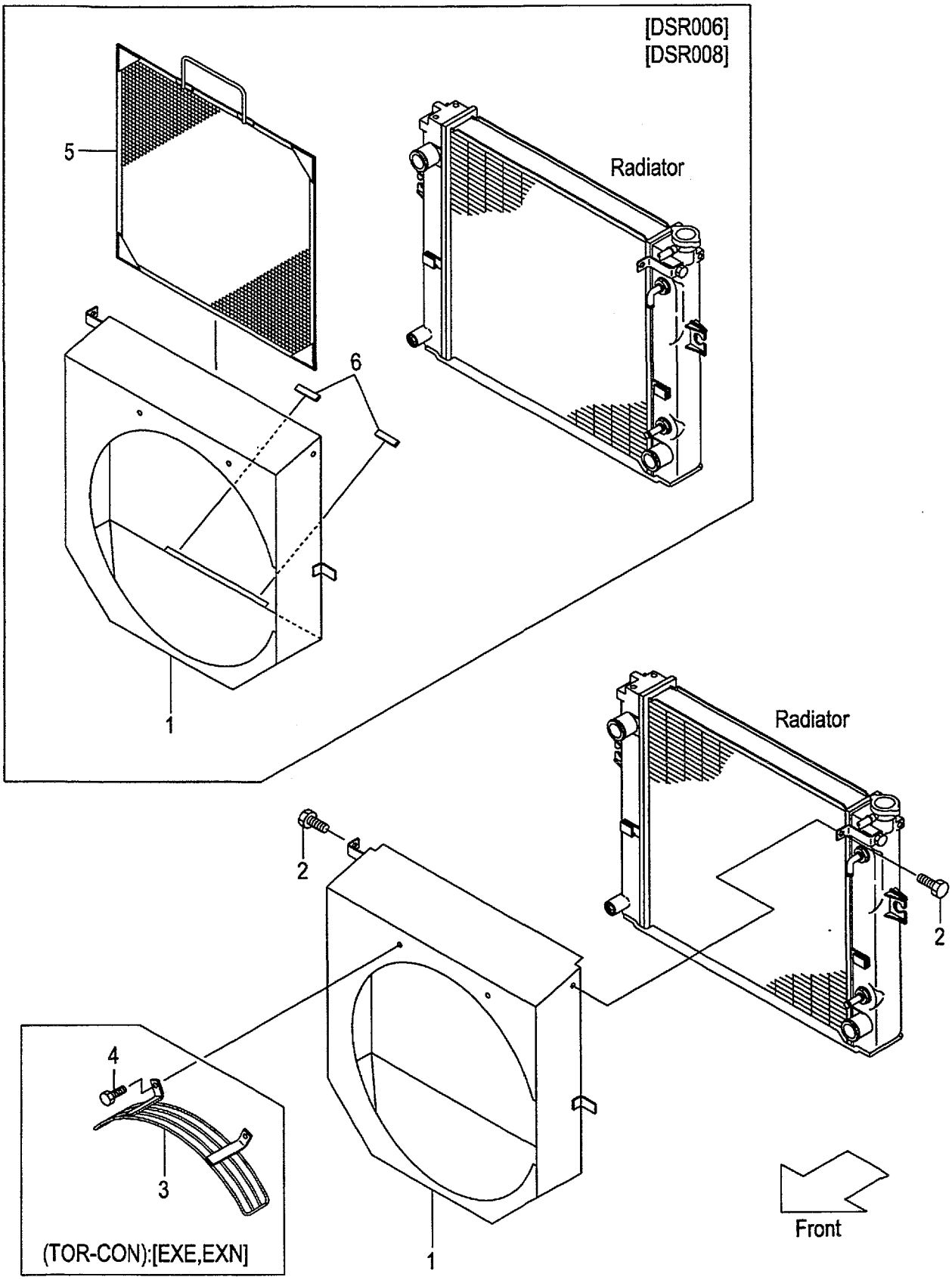

A:FD20C6H FD25C6H
B:FD20T6H FD25T6H

FIG.14
(F5H221A0)

Item No	Part No.	Mark	Description		Req'd	Remarks : Serial No.
1	239A2-12201		SHROUD,FAN	ｼｭﾗｳﾄﾞ	1	
-	539A6-52001		SHROUD,FAN	ｼｭﾗｳﾄﾞ	1	[DSR006][DSR008]
-	539A7-60301		SHROUD,FAN	ｼｭﾗｳﾄﾞ	1	[SCBCR]
2	01185-08016		BOLT	ﾎﾞﾙﾄ	2	
3	532B3-82201		GUARD,FAN	ｶﾞｰﾄﾞ	1	B [EXE][EXN]
4	01185-08020		BOLT	ﾎﾞﾙﾄ	2	B [EXE][EXN]
5	539A6-52051		SCREEN,DUST	ｽｸﾘｰﾝ	1	[DSR006]
-	539A6-52151		SCREEN,DUST	ｽｸﾘｰﾝ	1	[DSR008]
6	209P6-42831		EDGING	ｴｯｼﾞﾝｸﾞ	2	[DSR006][DSR008]

FIG.15 FAN SHROUD (DIESEL:OIL CLUTCH)

(F5H221B0) ﾌｧﾝｼｭﾗｳﾄﾞ

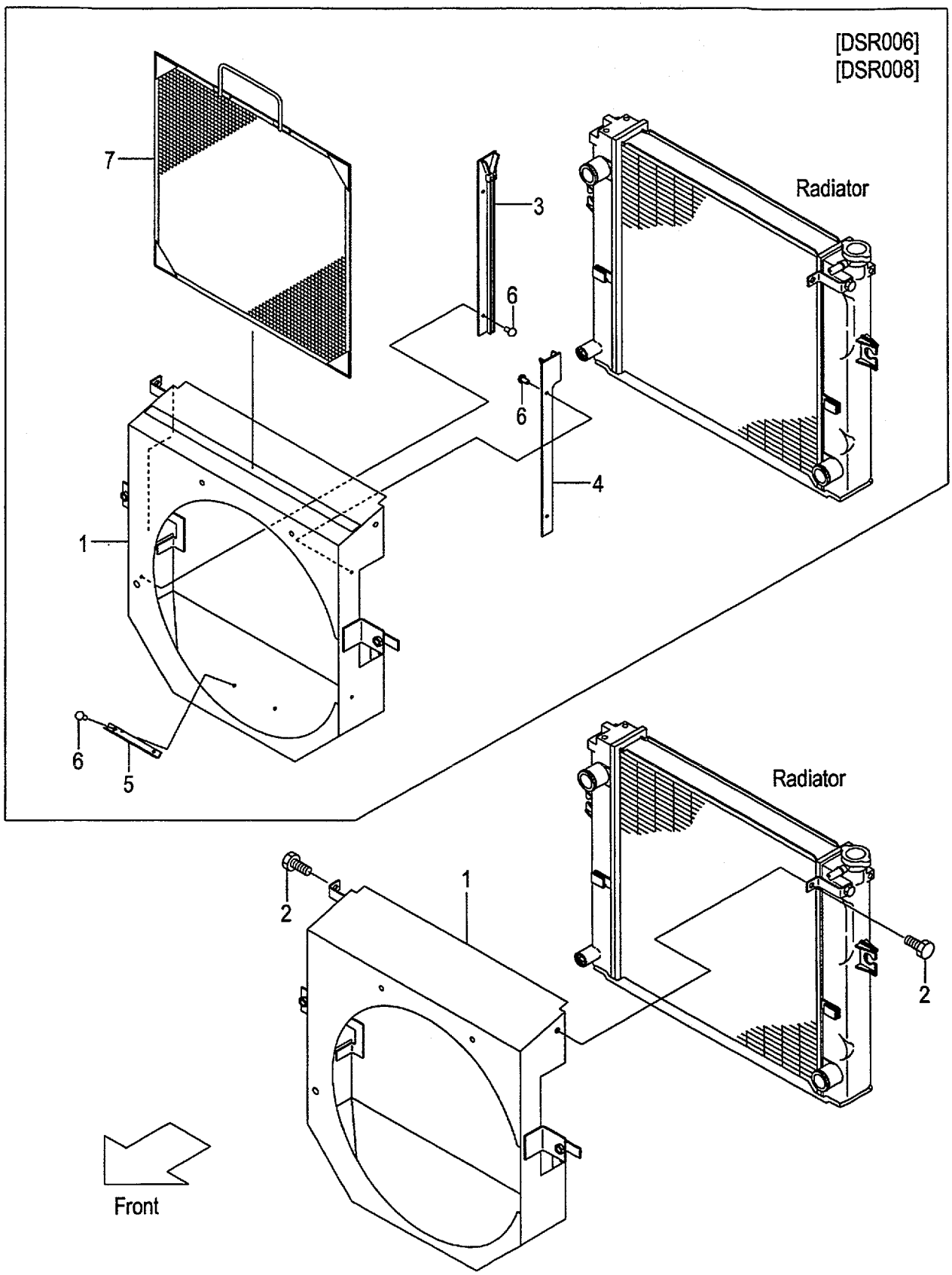

FIG.15
(F5H221B0)

A:FD20W6H FD25W6H

Item No	Part No.	Mark	Description		Req'd	Remarks : Serial No.
1	239H2-12201		SHROUD,FAN	ｼｭﾗｳﾄﾞ	1	
-	539H6-52001		SHROUD,FAN	ｼｭﾗｳﾄﾞ	1	[DSR006][DSR008]
-	539H7-60301		SHROUD,FAN	ｼｭﾗｳﾄﾞ	1	[SCBCR]
2	01185-08016		BOLT	ﾎﾞﾙﾄ	2	
3	539H6-52251		GUIDE,RH	ｶﾞｲﾄﾞ	1	[DSR006][DSR008]
4	539H6-52351		GUIDE,LH	ｶﾞｲﾄﾞ	1	[DSR006][DSR008]
5	532N6-52011		GUIDE,LOWER	ｶﾞｲﾄﾞ	1	[DSR006][DSR008]
6	22256-42001		RIVET	ﾘﾍﾞｯﾄ	6	[DSR006][DSR008]
7	539H6-52051		SCREEN,DUST	ｽｸﾘｰﾝ	1	[DSR006]
-	539H6-52151		SCREEN,DUST	ｽｸﾘｰﾝ	1	[DSR008]

FIG.16 FUEL SYSTEM (SUPPLY)

(F5H22210) フューエルシステム

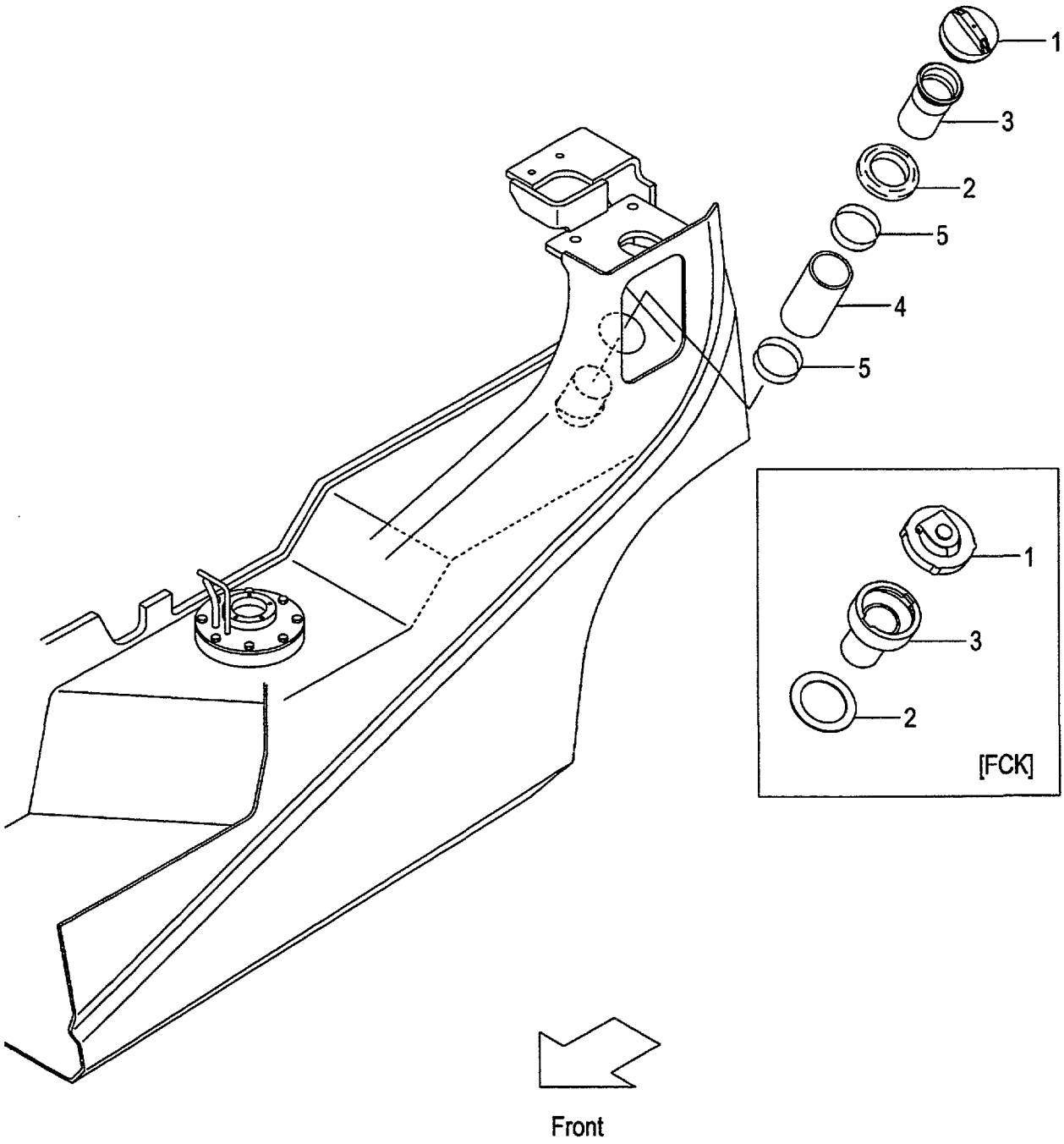

FIG.16
(F5H22210)

A:FG20C6H FG20T6H FG25C6H FG25T6H FG20W6H FG25W6H
B:FD20C6H FD20T6H FD25C6H FD25T6H FD20W6H FD25W6H

Item No	Part No.	Mark	Description		Req'd	Remarks : Serial No.
1	216G2-22051		CAP,FUEL	ｷｬｯﾌﾟ	1	
-	518G8-12001		CAP,FUEL	ｷｬｯﾌﾟ	1	[FCK]
2	216G2-22211		GROMMET	ｸﾞﾛﾒｯﾄ	1	
-	518G8-12101		RUBBER	ﾗﾊﾞｰ	1	[FCK]
3	218G2-22001		PIPE,FUEL	ﾊﾟｲﾌﾟ	1	
-	518G8-12051		PIPE,FUEL	ﾊﾟｲﾌﾟ	1	[FCK]
4	218G2-22051		HOSE,FUEL	ﾎｰｽ	1	
5	04911-00060		CLIP	ｸﾘｯﾌﾟ	2	

FIG.17 FUEL SYSTEM (SUCTION)

(F5H22220) フューエルシステム

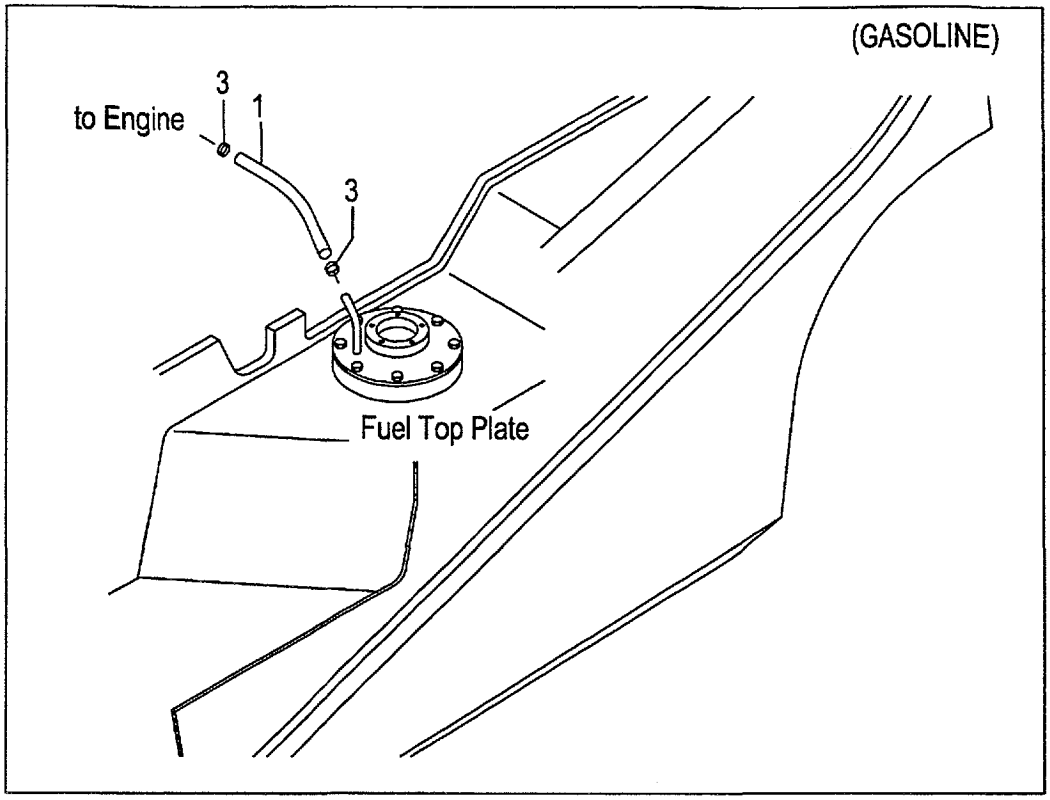

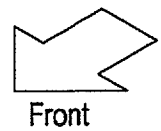

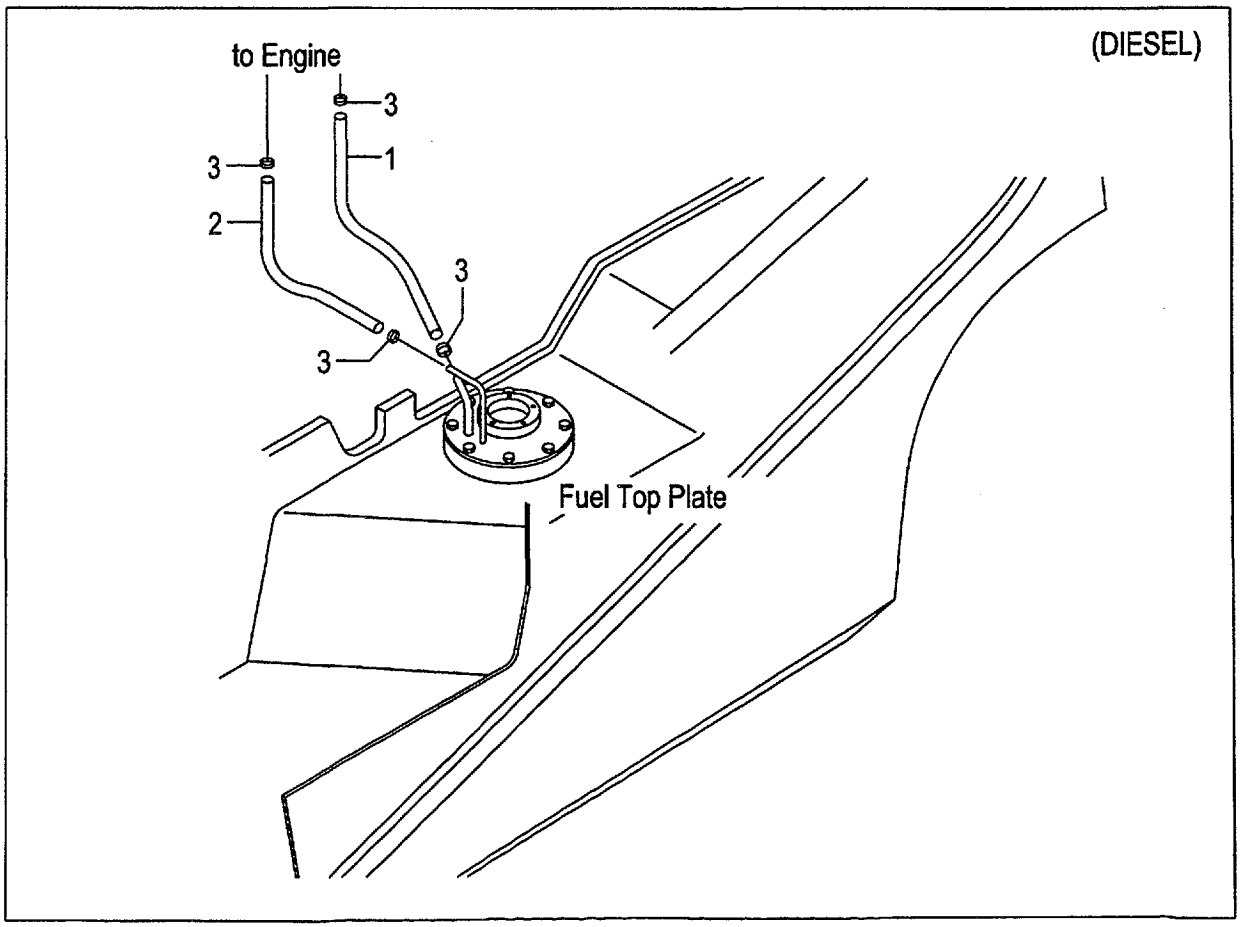

FIG.17
(F5H22220)

A:FG20C6H FG20T6H FG25C6H FG25T6H FG20W6H FG25W6H
B:FD20C6H FD20T6H FD25C6H FD25T6H FD20W6H FD25W6H

Item No	Part No.	Mark	Description	Req'd	Remarks : Serial No.
1	21152-22151		HOSE,FUEL,7.5X300 ホース	1	
2	24232-22001		HOSE,FUEL,6.5X450 ホース	1	B
3	22192-22091		CLIP クリップ	2	A
-	22192-22091		CLIP クリップ	4	B

FIG.18 EXHAUST SYSTEM (GASOLINE)

(F5H22310) エキゾーストシステム

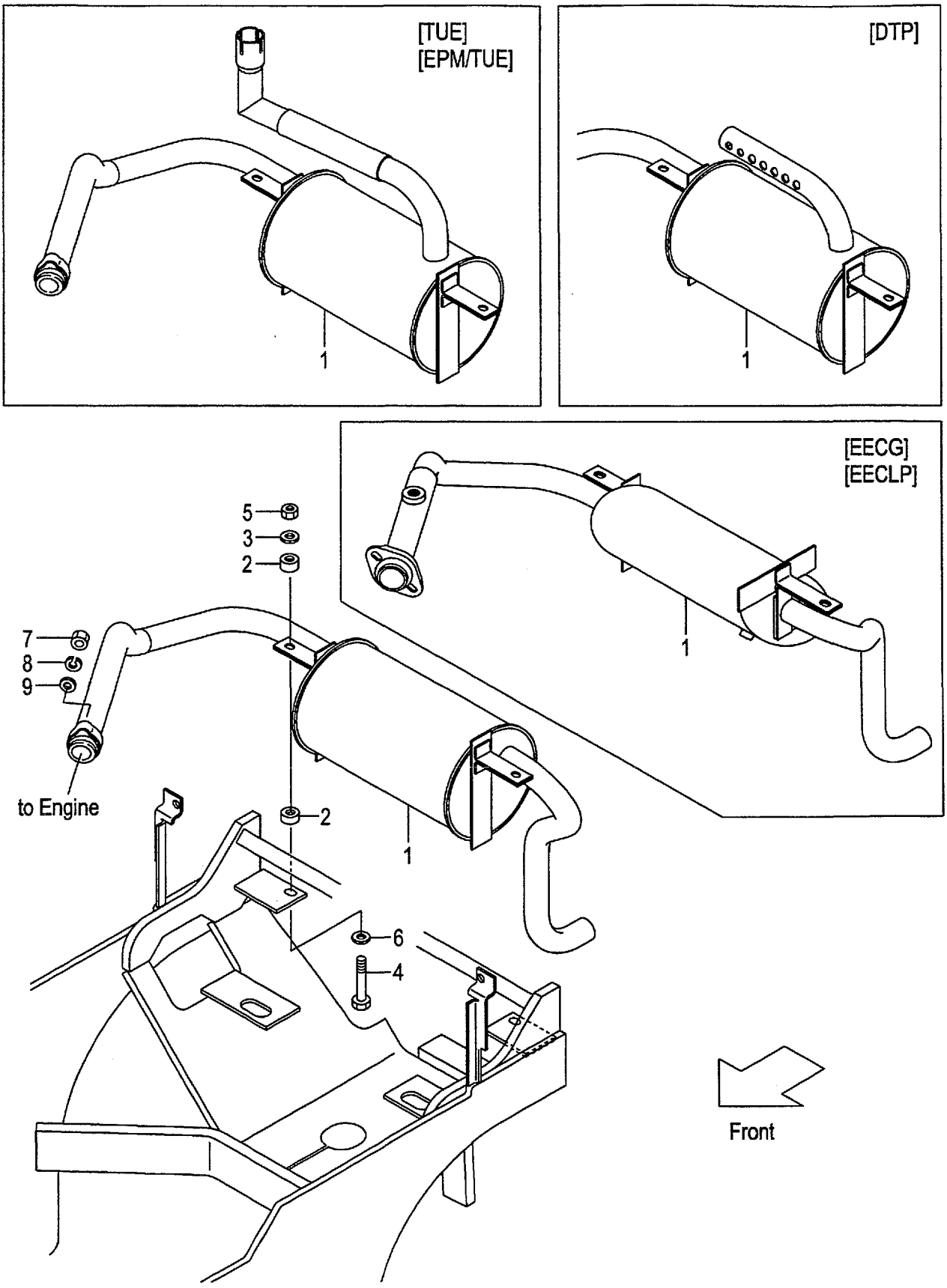

A:FG20C6H FG20T6H FG25C6H FG25T6H
B:FG20W6H FG25W6H

FIG.18
(F5H22310)

Item No	Part No.	Mark	Description		Req'd	Remarks : Serial No.
1	237A2-30101		MUFFLER	ﾏﾌﾗ	1	
-	537A0-80101		MUFFLER	ﾏﾌﾗ	1	[TUE]
-	537A1-70001		MUFFLER	ﾏﾌﾗ	1	[EPM]
-	537A0-80401		MUFFLER	ﾏﾌﾗ	1	[EPM/TUE]
-	537A1-72101		MUFFLER	ﾏﾌﾗ	1	[DTP]
-	536G1-70201		MUFFLER	ﾏﾌﾗ	1	A [EECG][EECLP]
2	22252-32241		RUBBER	ﾗﾊﾞｰ	4	
3	22252-32251		WASHER	ﾜｯｼｬ	2	
4	21232-32551		BOLT	ﾎﾞﾙﾄ	2	
5	23652-12051		NUT	ﾅｯﾄ	2	
6	02000-00010		WASHER	ﾜｯｼｬ	2	
7	01400-20008		NUT	ﾅｯﾄ	2	
8	02010-00008		WASHER	ﾜｯｼｬ	2	
9	02000-00008		WASHER	ﾜｯｼｬ	2	

FIG.19 EXHAUST SYSTEM (DIESEL)

(F5H22330) エキゾーストシステム

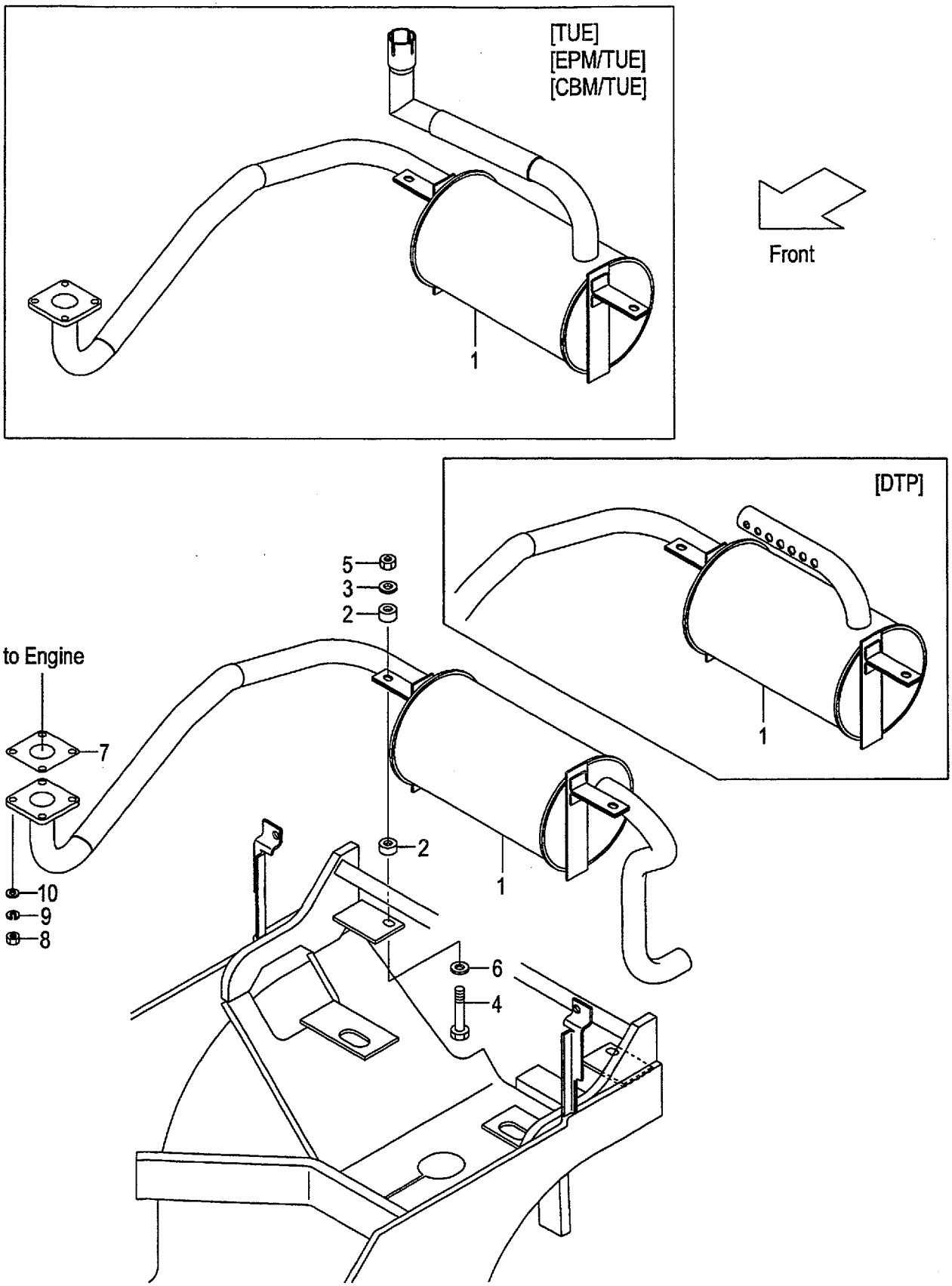

FIG.19
(F5H22330)

A:FD20C6H FD20T6H FD25C6H FD25T6H FD20W6H FD25W6H

Item No	Part No.	Mark	Description		Req'd	Remarks : Serial No.
1	239A2-30101		MUFFLER	ﾏﾌﾗ	1	
-	539A0-80101		MUFFLER	ﾏﾌﾗ	1	[TUE]
-	539A1-70001		MUFFLER	ﾏﾌﾗ	1	[EPM]
-	539A0-80401		MUFFLER	ﾏﾌﾗ	1	[EPM/TUE]
-	539A1-70011		MUFFLER	ﾏﾌﾗ	1	[CBM]
-	539A0-80501		MUFFLER	ﾏﾌﾗ	1	[CBM/TUE]
-	539A1-72101		MUFFLER	ﾏﾌﾗ	1	[DTP]
2	22252-32241		RUBBER	ﾗﾊﾞｰ	4	
3	22252-32251		WASHER	ﾜｯｼｬ	2	
4	21232-32551		BOLT	ﾎﾞﾙﾄ	2	
5	23652-12051		NUT	ﾅｯﾄ	2	
6	02000-00010		WASHER	ﾜｯｼｬ	2	
7	239A2-32001		GASKET	ｶﾞｽｹｯﾄ	1	
8	01400-20010		NUT	ﾅｯﾄ	4	
9	02010-00010		WASHER	ﾜｯｼｬ	4	
10	02000-00010		WASHER	ﾜｯｼｬ	4	

FIG.20 EXHAUST SYSTEM (DIESEL):[DPF]

(F5H22340) エキゾーストシステム

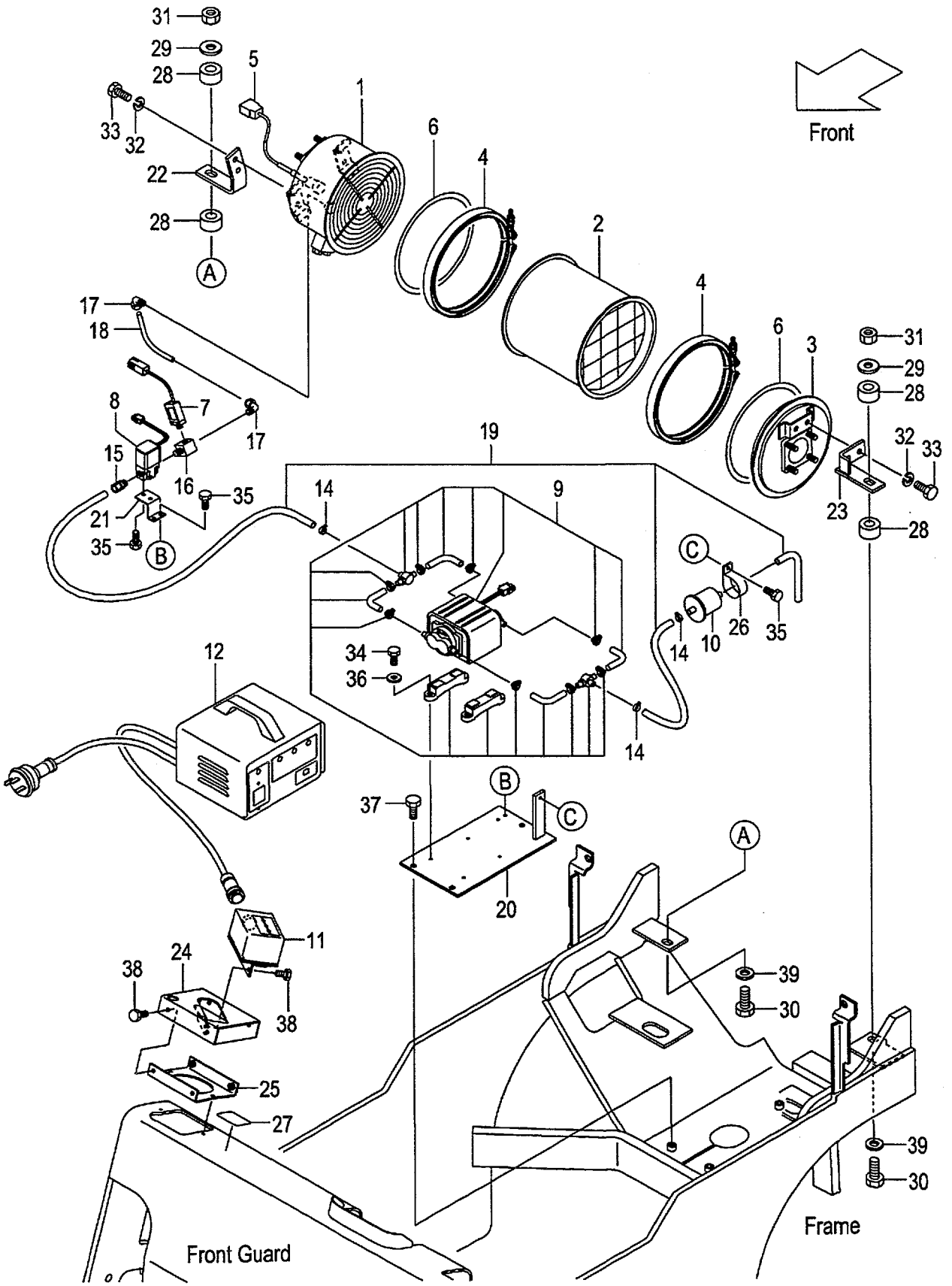

FIG.20
(F5H22340)

A:FD20C6H FD20T6H FD25C6H FD25T6H FD20W6H FD25W6H

Item No	Part No.	Mark	Description		Req'd	Remarks : Serial No.
K1	509P5-90101		KIT,DPF-MUFFLER	ﾏﾌﾗｷｯﾄ	1	[DPF] INC.1-15
A1	509P5-92001	*	MUFFLER-ASSY,DPF	ﾏﾌﾗｱｯｾﾝ	1	[DPF] INC.1-6
1	509P5-92011	*	UNIT,INLET	ﾕﾆｯﾄ	1	[DPF]
2	509P5-92021	*	UNIT,FILTER	ﾕﾆｯﾄ	1	[DPF]
3	509P5-92031	*	UNIT,OUTLET	ﾕﾆｯﾄ	1	[DPF]
4	509P5-92041	*	V-BAND	Vﾊﾞﾝﾄﾞ	2	[DPF]
5	509P5-92051	*	SENSOR,TEMP	ｾﾝｻ	1	[DPF]
6	509P5-92061	*	GASKET	ｶﾞｽｹｯﾄ	2	[DPF]
7	509P5-92071	*	SENSOR,PRESS	ｾﾝｻ	1	[DPF]
8	509P5-92081	*	VALVE,SOLENOIDE	ﾊﾞﾙﾌﾞ	1	[DPF]
9	509P5-92091	*	PUMP,AIR	ﾎﾟﾝﾌﾟ	1	[DPF]
10	509P5-92101	*	FILTER,AIR	ﾌｨﾙﾀ	1	[DPF]
11	509P5-92111	*	UNIT,MONITOR	ﾕﾆｯﾄ	1	[DPF]
12	509P5-92121	*	UNIT,CONTROLLER	ﾕﾆｯﾄ	1	[DPF]
13	509P5-92241	*†	KIT,CONNECTOR	ｺﾈｸﾀｷｯﾄ	1	[DPF]
K2	509P5-92511	*	KIT,PIPING	ﾊﾟｲﾋﾟﾝｸﾞｷｯﾄ	1	[DPF] INC.14,15
14	NO PART NO.	*#	CLIP	ｸﾘｯﾌﾟ	3	[DPF]
15	NO PART NO.	*#	NIPPLE	ﾆｯﾌﾟﾙ	1	[DPF]
16	509P5-92181		THREE-WAY	ｽﾘｰｳｴｲ	1	[DPF]
17	509P5-92201		ELBOW	ｴﾙﾎﾞ	2	[DPF]
18	509P5-92211		PIPE,COPPER	ﾊﾟｲﾌﾟ	1	[DPF]
19	509P5-92231		HOSE	ﾎｰｽ	1	[DPF]
20	539A5-92261		BRACKET,PUMP	ﾌﾞﾗｹｯﾄ	1	[DPF]
21	539A5-92251		BRACKET,VALVE	ﾌﾞﾗｹｯﾄ	1	[DPF]
22	539A5-92131		BRACKET,MUFFLER,RH	ﾌﾞﾗｹｯﾄ	1	[DPF]
23	539A5-92141		BRACKET,MUFFLER,LH	ﾌﾞﾗｹｯﾄ	1	[DPF]
24	539A5-92371		BRACKET,MONITOR	ﾌﾞﾗｹｯﾄ	1	[DPF]
25	516G1-42021		BRACKET	ﾌﾞﾗｹｯﾄ	1	[DPF]
26	509P5-92491		BAND	ﾊﾞﾝﾄﾞ	1	[DPF]
27	509P5-92521		DECAL,DPF-CAUTION	ﾃﾞｶﾙ	1	[DPF]
28	22252-32241		RUBBER	ﾗﾊﾞｰ	4	[DPF]
29	22252-32251		WASHER	ﾜｯｼｬ	2	[DPF]
30	21232-32551		BOLT	ﾎﾞﾙﾄ	2	[DPF]
31	23652-12051		NUT	ﾅｯﾄ	2	[DPF]
32	02013-00008		WASHER	ﾜｯｼｬ	4	[DPF]
33	01109-08020		BOLT	ﾎﾞﾙﾄ	4	[DPF]
34	01170-04012		BOLT	ﾎﾞﾙﾄ	4	[DPF]
35	01183-05010		BOLT	ﾎﾞﾙﾄ	5	[DPF]
36	02000-00004		WASHER	ﾜｯｼｬ	4	[DPF]
37	01185-08016		BOLT	ﾎﾞﾙﾄ	3	[DPF]
38	01185-06012		BOLT	ﾎﾞﾙﾄ	6	[DPF]
39	02000-00010		WASHER	ﾜｯｼｬ	2	[DPF]

FIG.21 POST & TAIL [TUE]

(F5H22360) ﾎﾟｽﾄ&ﾃｲﾙ

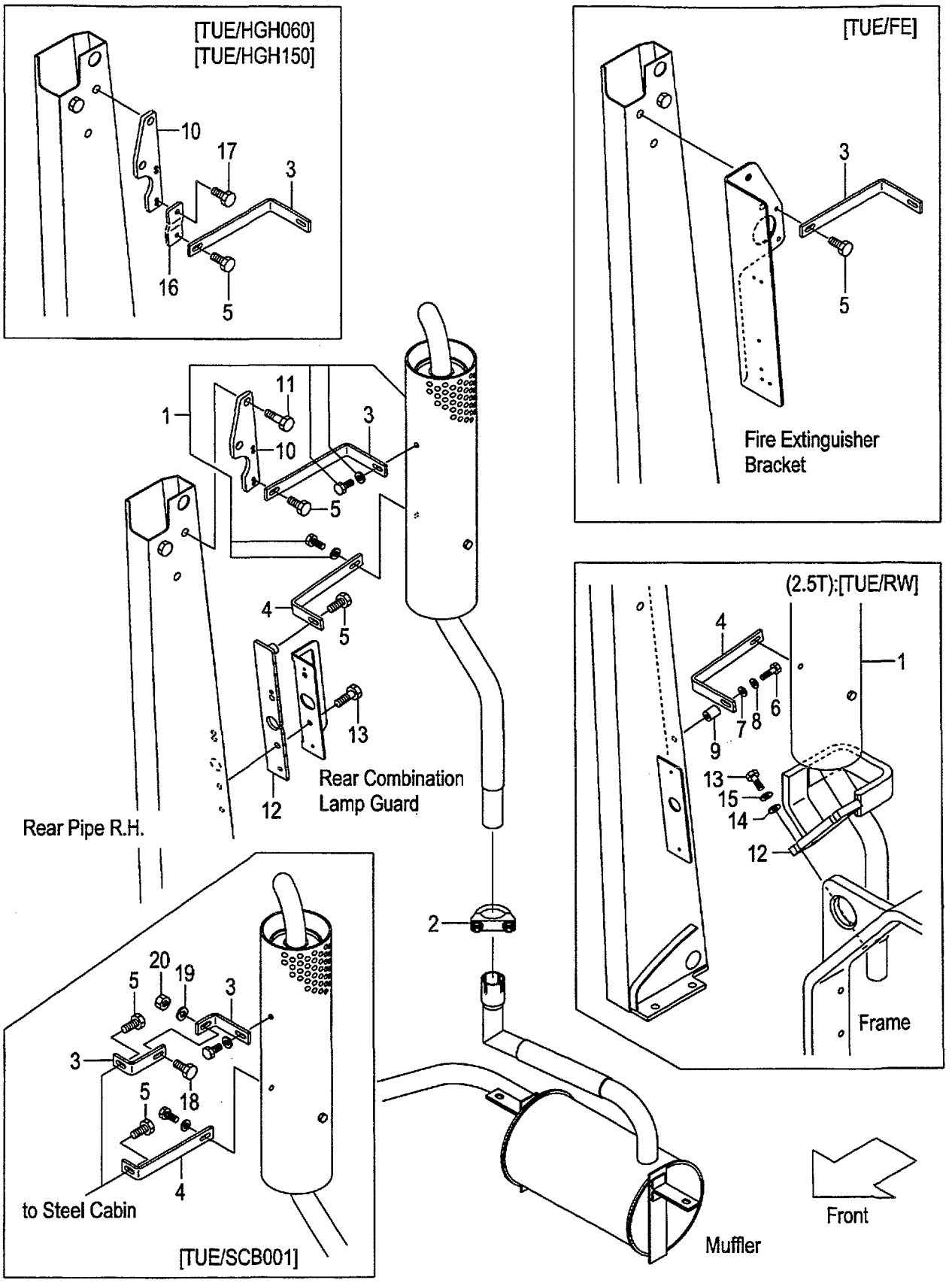

A:FG20C6H FG20T6H D:FG25W6H G:FD20W6H
B:FG25C6H FG25T6H E:FD20C6H FD20T6H H:FD25W6H
C:FG20W6H F:FD25C6H FD25T6H

FIG.21
(F5H22360)

Item No	Part No.	Mark	Description		Req'd	Remarks : Serial No.
1	537A0-80301		MUFFLER,VERTICAL	ﾏﾌﾗ	1	[TUE]
-	539C1-90501		MUFFLER,VERTICAL	ﾏﾌﾗ	1	B,D,F,H [TUE/RW]
2	234A2-30501		CLAMP,U-BOLT	ｸﾗﾝﾌﾟ	1	[TUE]
3	537A0-82001		STAY	ｽﾃｰ	1	[TUE]
-	524W3-92211		STAY	ｽﾃｰ	2	[TUE/SCB001]
-	539C1-90521		STAY	ｽﾃｰ	1	B,D,F,H [TUE/RW]
4	537A0-82011		STAY	ｽﾃｰ	1	[TUE]
-	514A0-82022		STAY	ｽﾃｰ	1	[TUE/SCB001]
-	514A0-82081		STAY	ｽﾃｰ	1	B,D,F,H [TUE/RW]
5	01185-08016		BOLT	ﾎﾞﾙﾄ	2	[TUE]
-	01185-08016		BOLT	ﾎﾞﾙﾄ	1	B,D,F,H [TUE/RW]
6	01100-08045		BOLT	ﾎﾞﾙﾄ	1	B,D,F,H [TUE/RW]
7	02000-00008		WASHER	ﾜｯｼｬ	1	B,D,F,H [TUE/RW]
8	02010-00008		WASHER	ﾜｯｼｬ	1	B,D,F,H [TUE/RW]
9	516G2-72071		SPACER	ｽﾍﾟｰｻ	1	B,D,F,H [TUE/RW]
10	510F0-82032		BRACKET,STAY	ﾌﾞﾗｹｯﾄ	1	[TUE](WITHOUT TUE/FE)
11	01186-12045		BOLT	ﾎﾞﾙﾄ	2	[TUE](WITHOUT TUE/FE)
12	534A0-82101		BRACKET,STAY	ﾌﾞﾗｹｯﾄ	1	[TUE]
-	539C1-92501		GUARD	ｶﾞｰﾄﾞ	1	B,D,F,H [TUE/RW]
13	01183-08022		BOLT	ﾎﾞﾙﾄ	2	[TUE]
-	01100-12045		BOLT	ﾎﾞﾙﾄ	4	B,D,F,H [TUE/RW]
14	02000-00012		WASHER	ﾜｯｼｬ	4	B,D,F,H [TUE/RW]
15	02010-00012		WASHER	ﾜｯｼｬ	4	B,D,F,H [TUE/RW]
16	514A0-82251		BRACKET,STAY	ﾌﾞﾗｹｯﾄ	1	[TUE/HGH060]
-	529F0-82101		BRACKET,STAY	ﾌﾞﾗｹｯﾄ	1	[TUE/HGH150]
17	01183-08016		BOLT	ﾎﾞﾙﾄ	2	[TUE/HGH060][TUE/HGH150]
18	01185-08030		BOLT	ﾎﾞﾙﾄ	1	[TUE/SCB001]
19	02000-00008		WASHER	ﾜｯｼｬ	1	[TUE/SCB001]
20	01400-00008		NUT	ﾅｯﾄ	1	[TUE/SCB001]

FIG.22 POST & TAIL [TUE/(EXB,EXC,EXE,EXK,EXN)]

(F5H22370) ﾎﾟｽﾄ&ﾃｲﾙ

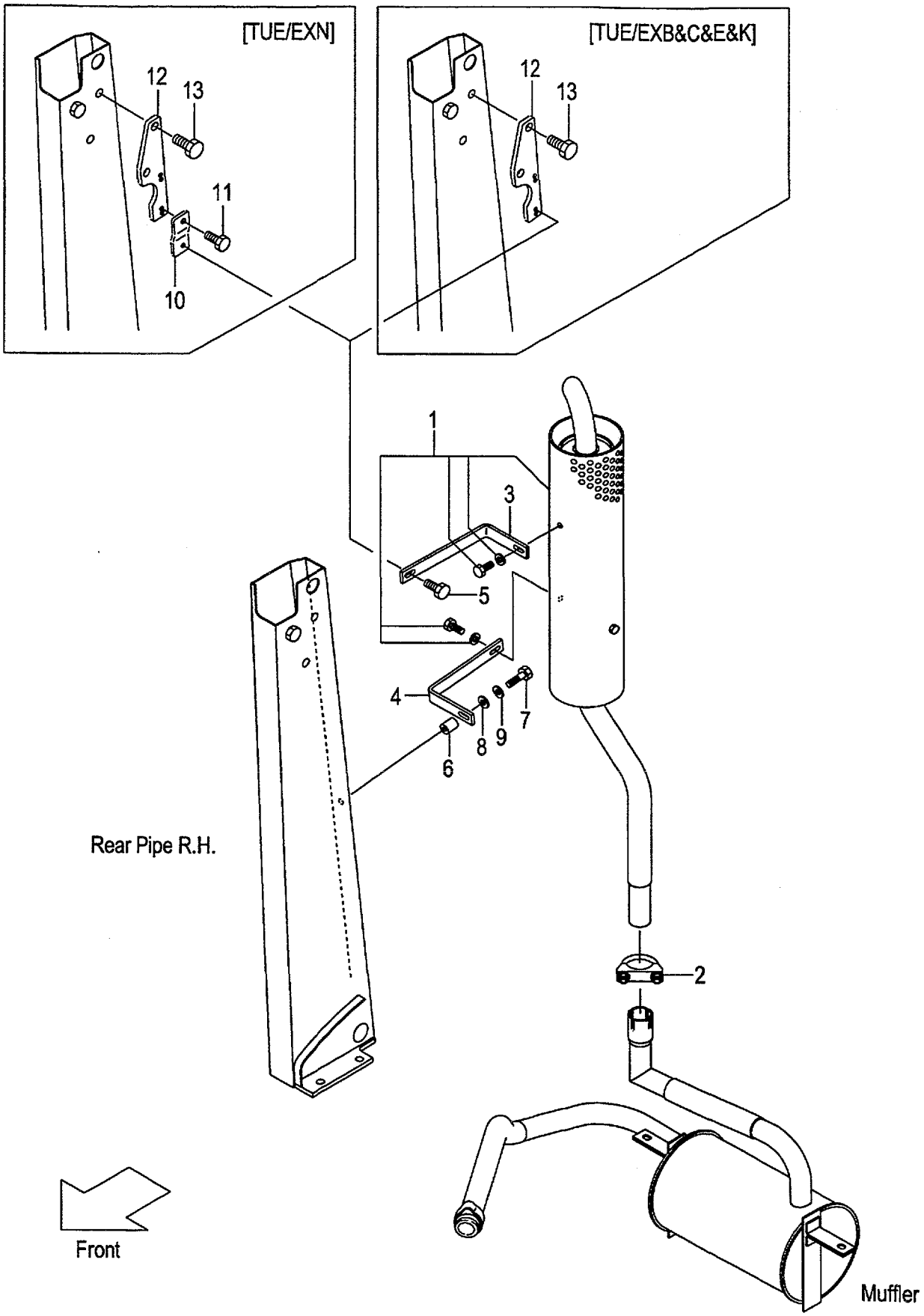

A:FG20C6H FG20T6H FG25C6H FG25T6H
B:FD20C6H FD20T6H FD25C6H FD25T6H

FIG.22
(F5H22370)

Item No	Part No.	Mark	Description		Req'd	Remarks : Serial No.
1	537A0-80301		MUFFLER,VERTICAL	ﾏﾌﾗ	1	[TUE/EXB&C&E&K&N]
2	234A2-30501		CLAMP,U-BOLT	ｸﾗﾝﾌﾟ	1	[TUE/EXB&C&E&K&N]
3	537A0-82001		STAY	ｽﾃｰ	1	[TUE/EXB&C&E&K&N]
4	537A0-82011		STAY	ｽﾃｰ	1	[TUE/EXB&C&E&K&N]
5	01185-08016		BOLT	ﾎﾞﾙﾄ	1	[TUE/EXB&C&E&K&N]
6	516G2-72071		SPACER	ｽﾍﾟｰｻ	1	[TUE/EXB&C&E&K&N]
7	01100-08045		BOLT	ﾎﾞﾙﾄ	1	[TUE/EXB&C&E&K&N]
8	02000-00008		WASHER	ﾜｯｼｬ	1	[TUE/EXB&C&E&K&N]
9	02010-00008		WASHER	ﾜｯｼｬ	1	[TUE/EXB&C&E&K&N]
10	514A0-82251		BRACKET,STAY	ﾌﾞﾗｹｯﾄ	1	[TUE/EXN]
11	01183-08016		BOLT	ﾎﾞﾙﾄ	2	[TUE/EXN]
12	510F0-82032		BRACKET,STAY	ﾌﾞﾗｹｯﾄ	1	[TUE/EXB&C&E&K&N]
13	01186-12045		BOLT	ﾎﾞﾙﾄ	2	[TUE/EXB&C&E&K&N]

FIG.23 WIRE HARNESS (DIESEL):[DPF]

(F5H22380) ワイヤハーネス

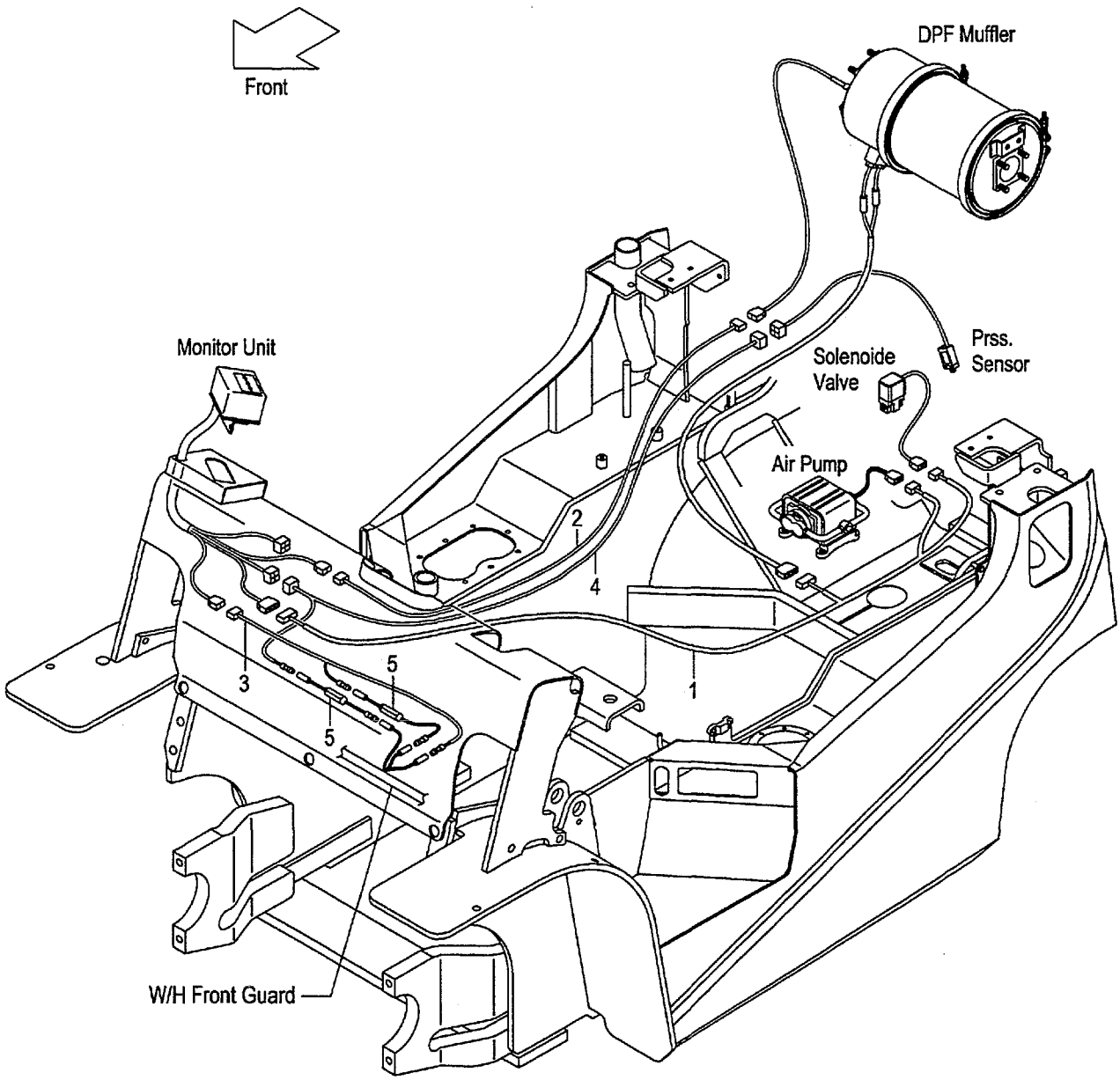

FIG.23
(F5H22380)

A:FD20C6H FD20T6H FD25C6H FD25T6H FD20W6H FD25W6H

Item No	Part No.	Mark	Description	Req'd	Remarks : Serial No.
1	539A5-92441		WIRE-HARNESS ﾜｲﾔﾊｰﾈｽ	1	[DPF] (MONITOR-HEATER& PUMP&VALVE)
2	509P5-92451		WIRE-HARNESS ﾜｲﾔﾊｰﾈｽ	1	[DPF](MONITOR-TEMP SENSOR)
3	509M5-92381		WIRE-HARNESS ﾜｲﾔﾊｰﾈｽ	1	[DPF](MONITOR-OPT TERMINAL)
4	509P5-92471		WIRE-HARNESS ﾜｲﾔﾊｰﾈｽ	1	[DPF] (MONITOR-PRESSURE SENSOR)
5	509P5-92481		WIRE-HARNESS ﾜｲﾔﾊｰﾈｽ	2	[DPF](FUSE BOX)

FIG.24 FRONT TUBE & JOINT (DIESEL):[DPF]

(F5H22390) フロントチューブ&ジョイント

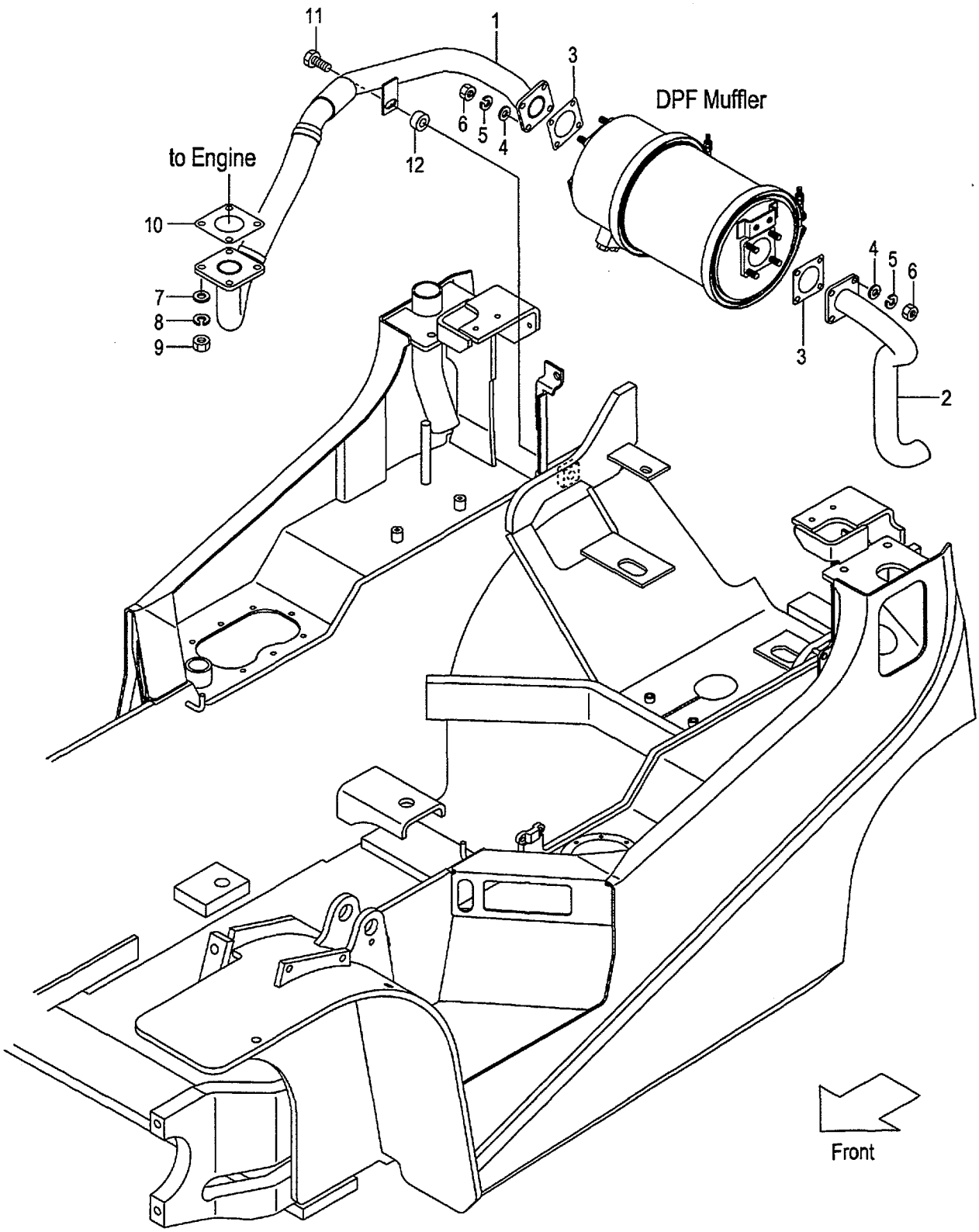

FIG.24
(F5H22390)

A:FD20C6H FD20T6H FD25C6H FD25T6H FD20W6H FD25W6H

Item No	Part No.	Mark	Description		Req'd	Remarks : Serial No.
1	539A5-92321		TUBE,FRONT	ﾁｭｰﾌﾞ	1	[DPF]
2	539A5-92341		TUBE,TAIL	ﾁｭｰﾌﾞ	1	[DPF]
3	509P5-92351		GASKET	ｶﾞｽｹｯﾄ	2	[DPF]
4	02001-00008		WASHER	ﾜｯｼｬ	8	[DPF]
5	02013-00008		WASHER	ﾜｯｼｬ	8	[DPF]
6	01400-30008		NUT	ﾅｯﾄ	8	[DPF]
7	02000-00010		WASHER	ﾜｯｼｬ	4	[DPF]
8	02010-00010		WASHER	ﾜｯｼｬ	4	[DPF]
9	01400-20010		NUT	ﾅｯﾄ	4	[DPF]
10	239A2-32001		GASKET	ｶﾞｽｹｯﾄ	1	[DPF]
11	01182-10030		BOLT	ﾎﾞﾙﾄ	1	[DPF]
12	22252-32241		RUBBER	ﾗﾊﾞｰ	1	[DPF]

FIG.25 COMBINATION METER (GASOLINE)

(F5H22410) コンビネーションメータ

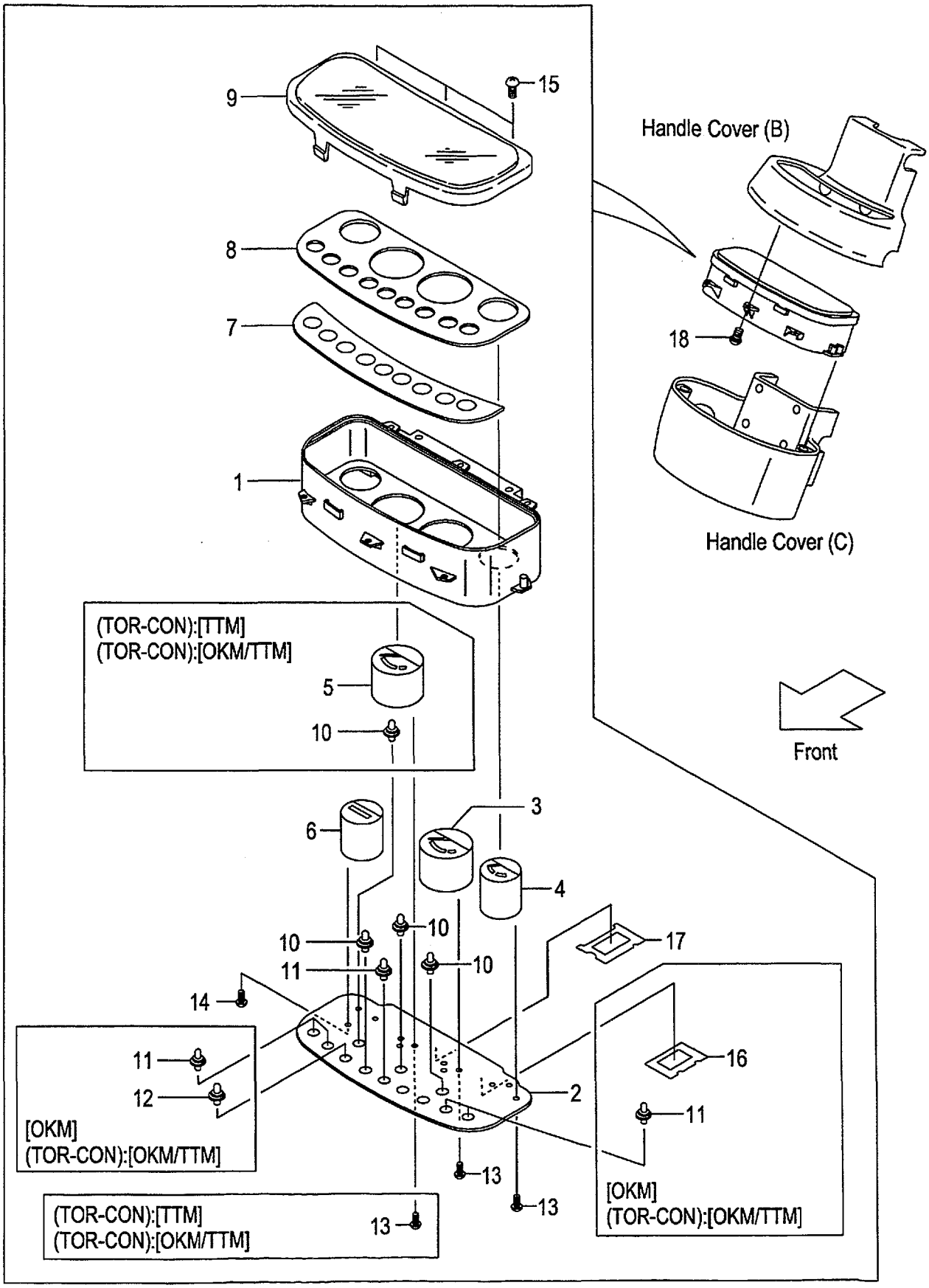

A:FG20C6H FG25C6H
B:FG20T6H FG25T6H
C:FG20W6H FG25W6H

FIG.25
(F5H22410)

Item No	Part No.	Mark	Description		Req'd	Remarks : Serial No.
A1	216G2-40301		METER-ASSY,COMBINATION	コンビネーションメータアッセン	1	INC.1-4,6-11,13-15,17
-	516G6-20101		METER-ASSY,COMBINATION	コンビネーションメータアッセン	1	[OKM] INC.1-4,6-17
-	516H8-80101		METER-ASSY,COMBINATION	コンビネーションメータアッセン	1	B [TTM] INC.1-11,13-15,17
-	516G6-20201		METER-ASSY,COMBINATION	コンビネーションメータアッセン	1	B [OKM/TTM] INC.1-17
1	216G2-43201		HOUSING	ハウジング	1	
2	216G2-43211		CIRCUIT,PRINTED	サーキット	1	
-	516G6-22051		CIRCUIT,PRINTED	サーキット	1	[OKM]
-	516G6-22051		CIRCUIT,PRINTED	サーキット	1	B [OKM/TTM]
3	216G2-43231		GAUGE,WATER-TEMP	ゲージ	1	
4	216G2-43241		GAUGE,FUEL	ゲージ	1	
5	216G2-43251		GAUGE,OIL-TEMP	ゲージ	1	B [TTM][OKM/TTM]
6	216G2-43261		METER,HOUR	メータ	1	
7	216G2-43271		LENS,WARNING	レンズ	1	
8	216G2-43281		PLATE,SHADOW	プレート	1	
-	216G2-43291		PLATE,SHADOW	プレート	1	B [TTM][OKM/TTM]
9	216G2-43301		COVER,FRONT	カバー	1	
10	222A2-42331		SOCKET & BULB	ソケット&バルブ	3	(14V/1.4W)
-	222A2-42331		SOCKET & BULB	ソケット&バルブ	4	B [TTM][OKM/TTM](14V/1.4W)
11	222A2-42401		SOCKET & BULB	ソケット&バルブ	1	(13.5V/2W)
-	222A2-42401		SOCKET & BULB	ソケット&バルブ	5	[OKM](13.5V/2W)
-	222A2-42401		SOCKET & BULB	ソケット&バルブ	5	B [OKM/TTM](13.5V/2W)
12	222A2-42341		SOCKET & BULB	ソケット&バルブ	1	[OKM](14V/3W)
-	222A2-42341		SOCKET & BULB	ソケット&バルブ	1	B [OKM/TTM](14V/3W)
13	229F2-42421		SCREW	スクリュ	6	
-	229F2-42421		SCREW	スクリュ	9	B [TTM][OKM/TTM]
14	229F2-42431		SCREW	スクリュ	3	
15	222A2-42361		SCREW	スクリュ	3	
16	516G6-22031		GASKET	ガスケット	1	[OKM]
-	516G6-22031		GASKET	ガスケット	1	B [OKM/TTM]
17	216G2-43161		GASKET	ガスケット	1	
18	222A2-42031		SCREW	スクリュ	5	

FIG.26 COMBINATION METER (DIESEL)

(F5H22420) コンビネーションメータ

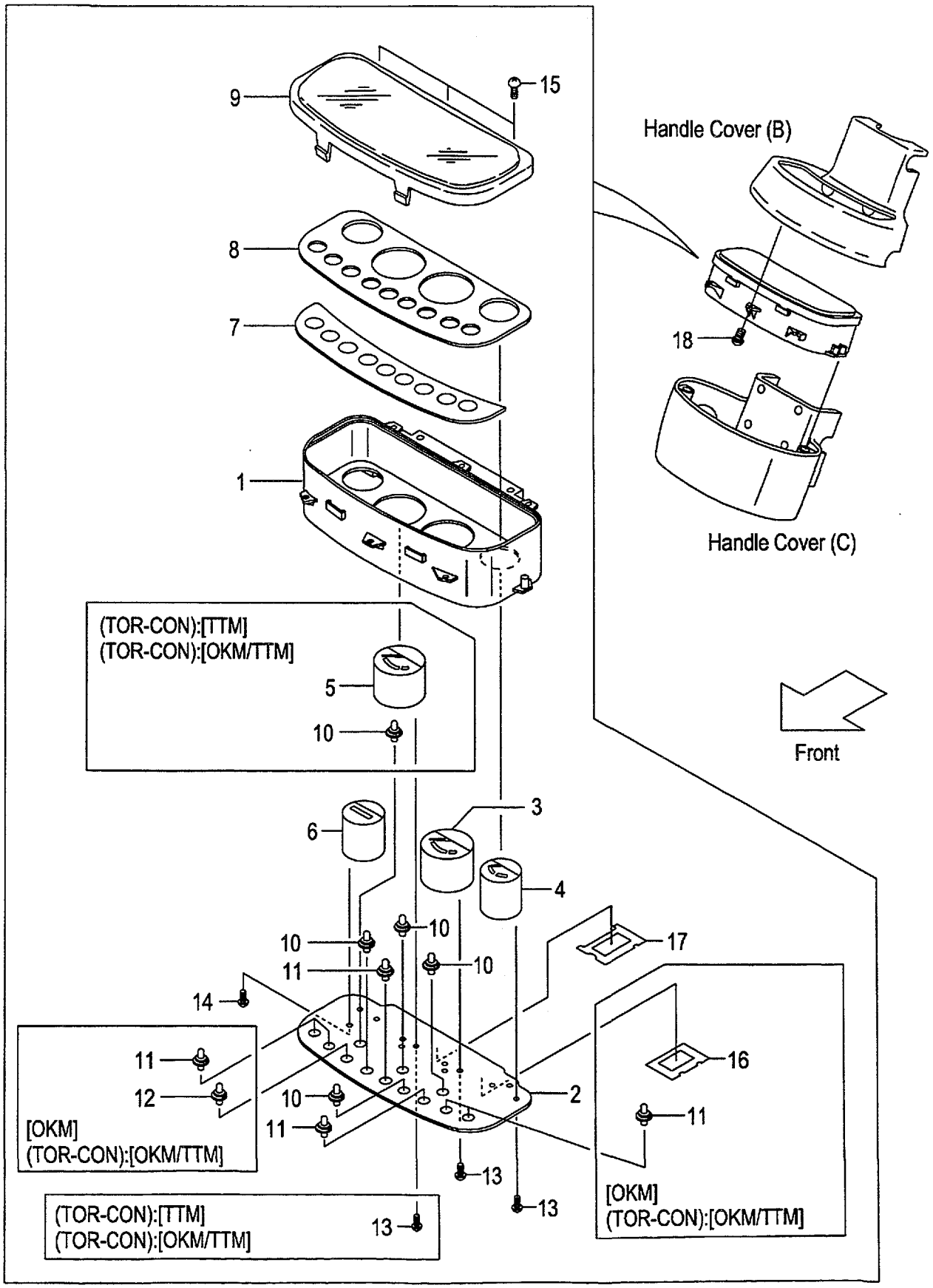

A:FD20C6H FD25C6H
B:FD20T6H FD25T6H
C:FD20W6H FD25W6H

FIG.26
(F5H22420)

Item No	Part No.	Mark	Description		Req'd	Remarks : Serial No.
A1	217G2-40301		METER-ASSY,COMBINATION	コンビネーションメータアッセン	1	INC.1-4,6-11,13-15,17
-	517G6-20101		METER-ASSY,COMBINATION	コンビネーションメータアッセン	1	[OKM] INC.1-4,6-17
-	517H8-80101		METER-ASSY,COMBINATION	コンビネーションメータアッセン	1	B [TTM] INC.1-11,13-15,17
-	517G6-20201		METER-ASSY,COMBINATION	コンビネーションメータアッセン	1	B [OKM/TTM] INC.1-17
1	216G2-43201		HOUSING	ハウジング	1	
2	216G2-43221		CIRCUIT,PRINTED	サーキット	1	
-	516G6-22051		CIRCUIT,PRINTED	サーキット	1	[OKM]
-	516G6-22051		CIRCUIT,PRINTED	サーキット	1	B [OKM/TTM]
3	216G2-43231		GAUGE,WATER-TEMP	ゲージ	1	
4	216G2-43241		GAUGE,FUEL	ゲージ	1	
5	216G2-43251		GAUGE,OIL-TEMP	ゲージ	1	B [TTM][OKM/TTM]
6	216G2-43261		METER,HOUR	メータ	1	
7	216G2-43271		LENS,WARNING	レンズ	1	
8	216G2-43281		PLATE,SHADOW	プレート	1	
-	216G2-43291		PLATE,SHADOW	プレート	1	B [TTM][OKM/TTM]
9	216G2-43301		COVER,FRONT	カバー	1	
10	222A2-42331		SOCKET & BULB	ソケット&バルブ	4	(14V/1.4W)
-	222A2-42331		SOCKET & BULB	ソケット&バルブ	5	B [TTM][OKM/TTM](14V/1.4W)
11	222A2-42401		SOCKET & BULB	ソケット&バルブ	2	(13.5V/2W)
-	222A2-42401		SOCKET & BULB	ソケット&バルブ	6	[OKM](13.5V/2W)
-	222A2-42401		SOCKET & BULB	ソケット&バルブ	6	B [OKM/TTM](13.5V/2W)
12	222A2-42341		SOCKET & BULB	ソケット&バルブ	1	[OKM](14V/3W)
-	222A2-42341		SOCKET & BULB	ソケット&バルブ	1	B [OKM/TTM](14V/3W)
13	229F2-42421		SCREW	スクリュ	6	
-	229F2-42421		SCREW	スクリュ	9	B [TTM][OKM/TTM]
14	229F2-42431		SCREW	スクリュ	3	
15	222A2-42361		SCREW	スクリュ	3	
16	516G6-22031		GASKET	ガスケット	1	[OKM]
-	516G6-22031		GASKET	ガスケット	1	B [OKM/TTM]
17	216G2-43161		GASKET	ガスケット	1	
18	222A2-42031		SCREW	スクリュ	5	

FIG.27 COMBINATION METER (GASOLINE):[EECG][EECLP]

(F5H224B0) コンビネーションメータ

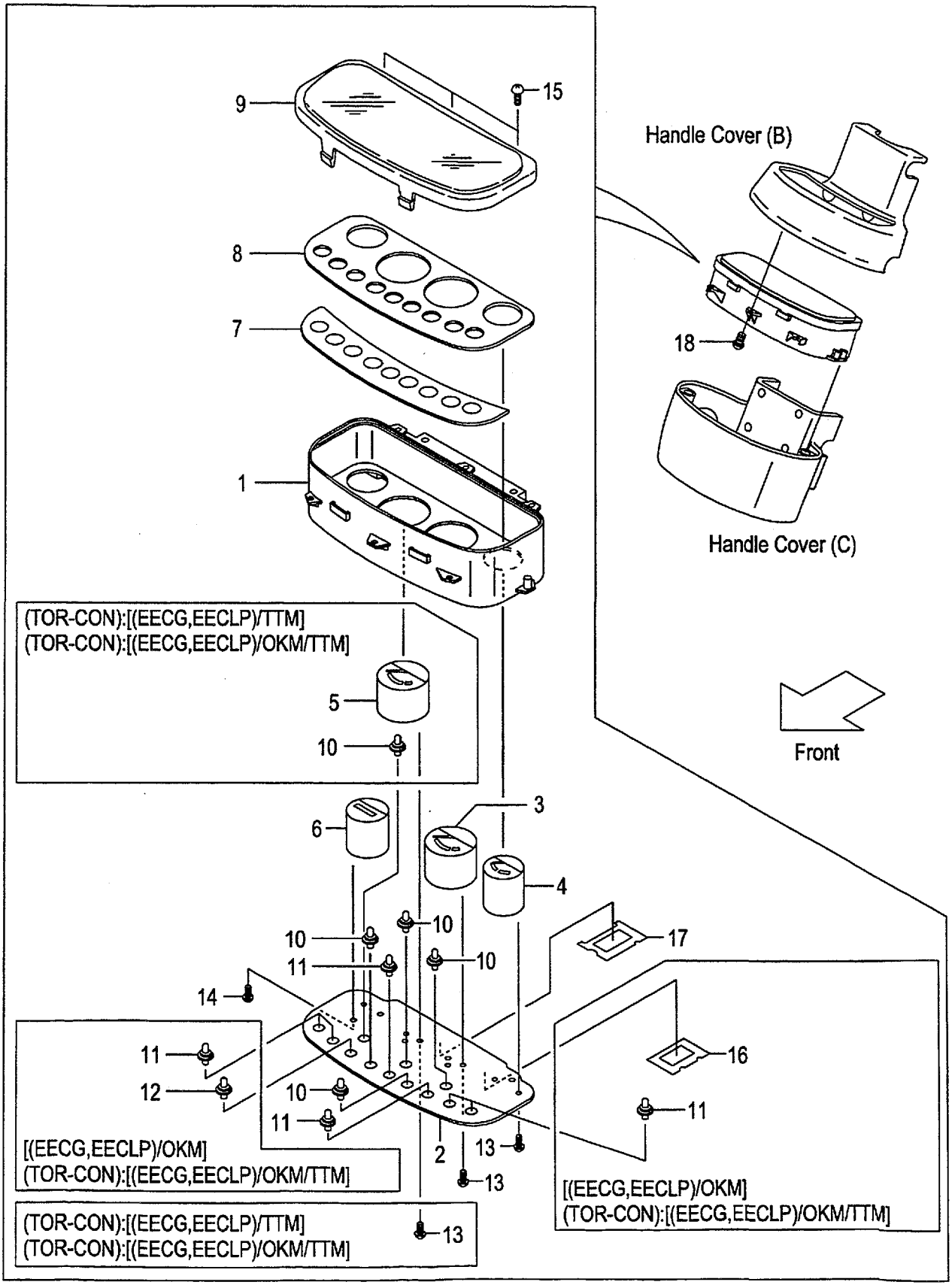

A:FG20C6H FG25C6H
B:FG20T6H FG25T6H

FIG.27
(F5H224B0)

Item No	Part No.	Mark	Description		Req'd	Remarks : Serial No.
A1	531B2-70251		METER-ASSY,COMBINATION	コンビネーションメータアッセン	1	[EECG][EECLP] INC.1-4,6-11,13-15,17
-	531B2-70271		METER-ASSY,COMBINATION	コンビネーションメータアッセン	1	[EECG/OKM][EECLP/OKM] INC.1-4,6-17
-	531B2-70261		METER-ASSY,COMBINATION	コンビネーションメータアッセン	1	B [EECG/TTM][EECLP/TTM] INC.1-11,13-15,17
-	531B2-70281		METER-ASSY,COMBINATION	コンビネーションメータアッセン	1	B [EECG/OKM/TTM][EECLP/OKM/TTM] INC.1-17
1	216G2-43201		HOUSING	ハウジング	1	[EECG][EECLP]
2	216G2-43221		CIRCUIT,PRINTED	サーキット	1	[EECG][EECLP]
-	516G6-22051		CIRCUIT,PRINTED	サーキット	1	[EECG/OKM][EECLP/OKM]
-	516G6-22051		CIRCUIT,PRINTED	サーキット	1	B [EECG/OKM/TTM][EECLP/OKM/TTM]
3	216G2-43231		GAUGE,WATER-TEMP	ゲージ	1	[EECG][EECLP]
4	216G2-43241		GAUGE,FUEL	ゲージ	1	[EECG][EECLP]
5	216G2-43251		GAUGE,OIL-TEMP	ゲージ	1	B [EECG/TTM][EECLP/TTM] [EECG/OKM/TTM][EECLP/OKM/TTM]
6	216G2-43261		METER,HOUR	メータ	1	[EECG][EECLP]
7	NO PART NO.		LENS,WARNING	レンズ	1	[EECG][EECLP]
8	216G2-43281		PLATE,SHADOW	プレート	1	[EECG][EECLP]
-	216G2-43291		PLATE,SHADOW	プレート	1	B [EECG/TTM][EECLP/TTM] [EECG/OKM/TTM][EECLP/OKM/TTM]
9	216G2-43301		COVER,FRONT	カバー	1	[EECG][EECLP]
10	222A2-42331		SOCKET & BULB	ソケット&バルブ	4	[EECG][EECLP](14V/1.4W)
-	222A2-42331		SOCKET & BULB	ソケット&バルブ	5	B [EECG/TTM][EECLP/TTM] (14V/1.4W)
-	222A2-42331		SOCKET & BULB	ソケット&バルブ	5	B [EECG/OKM/TTM][EECLP/OKM/TTM] (14V/1.4W)
11	222A2-42401		SOCKET & BULB	ソケット&バルブ	2	[EECG][EECLP](13.5V/2W)
-	222A2-42401		SOCKET & BULB	ソケット&バルブ	6	[EECG/OKM][EECLP/OKM] (13.5V/2W)
-	222A2-42401		SOCKET & BULB	ソケット&バルブ	6	B [EECG/OKM/TTM][EECLP/OKM/TTM] (13.5V/2W)
12	222A2-42341		SOCKET & BULB	ソケット&バルブ	1	[EECG/OKM][EECLP/OKM](14V/3W)
-	222A2-42341		SOCKET & BULB	ソケット&バルブ	1	B [EECG/OKM/TTM][EECLP/OKM/TTM] (14V/3W)
13	229F2-42421		SCREW	スクリュ	6	[EECG][EECLP]
-	229F2-42421		SCREW	スクリュ	9	B [EECG/TTM][EECLP/TTM] [EECG/OKM/TTM][EECLP/OKM/TTM]
14	229F2-42431		SCREW	スクリュ	3	[EECG][EECLP]
15	222A2-42361		SCREW	スクリュ	3	[EECG][EECLP]

FIG.27 COMBINATION METER (GASOLINE):[EECG][EECLP]

(F5H224B0) コンビネーションメータ

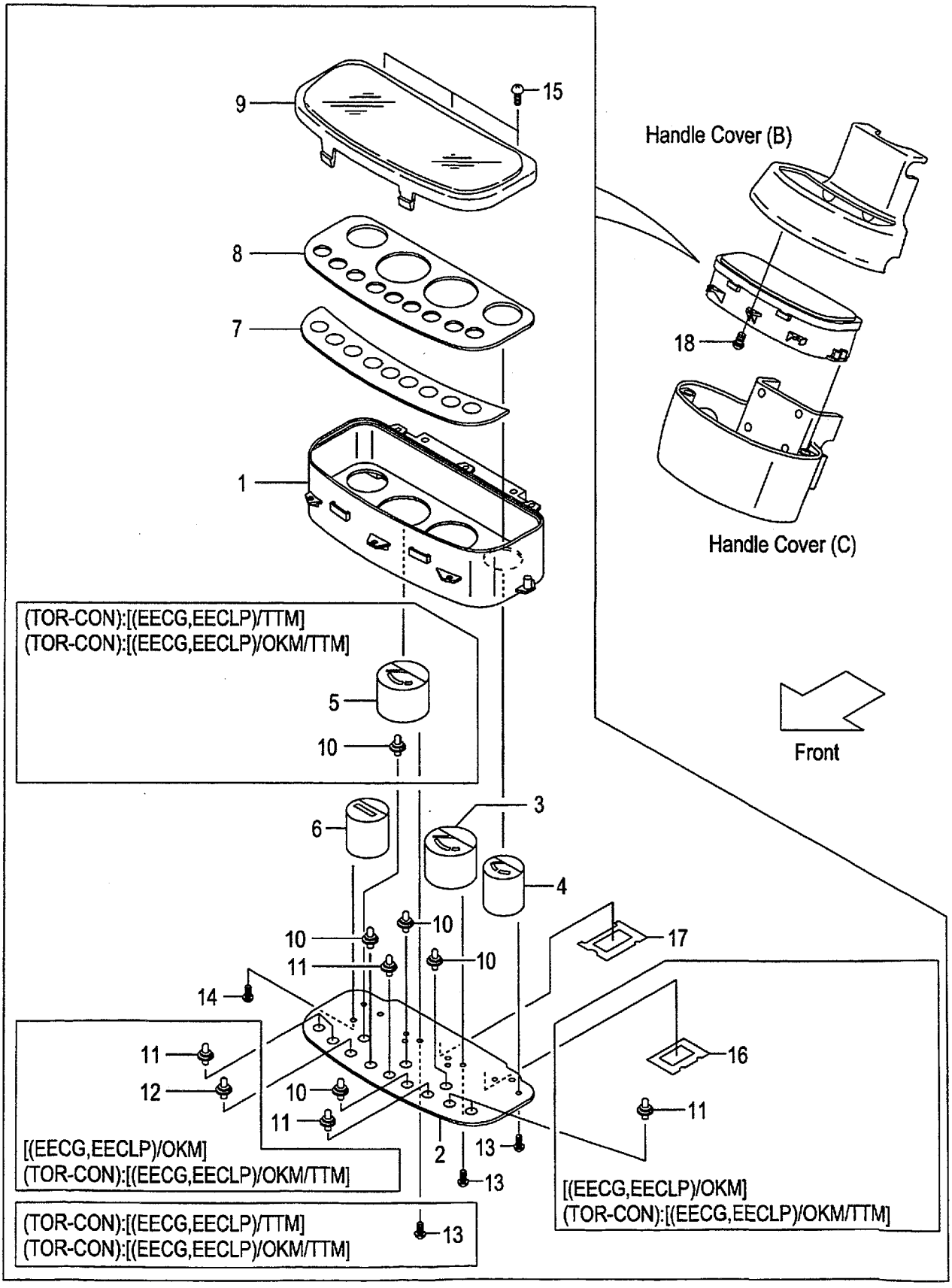

FIG.27

A:FG20C6H FG25C6H
B:FG20T6H FG25T6H

(F5H224B0)

Item No	Part No.	Mark	Description		Req'd	Remarks : Serial No.
16	516G6-22031		GASKET	ｶﾞｽｹｯﾄ	1	[EECG/OKM][EECLP/OKM]
-	516G6-22031		GASKET	ｶﾞｽｹｯﾄ	1	B [EECG/OKM/TTM][EECLP/OKM/TTM]
17	216G2-43161		GASKET	ｶﾞｽｹｯﾄ	1	[EECG][EECLP]
18	222A2-42031		SCREW	ｽｸﾘｭ	5	[EECG][EECLP]

FIG.28 STEERING SHAFT COVER (CLUTCH)(OIL CLUTCH)

(F5H22430) ステアリング゛シャフトカバ゛ー

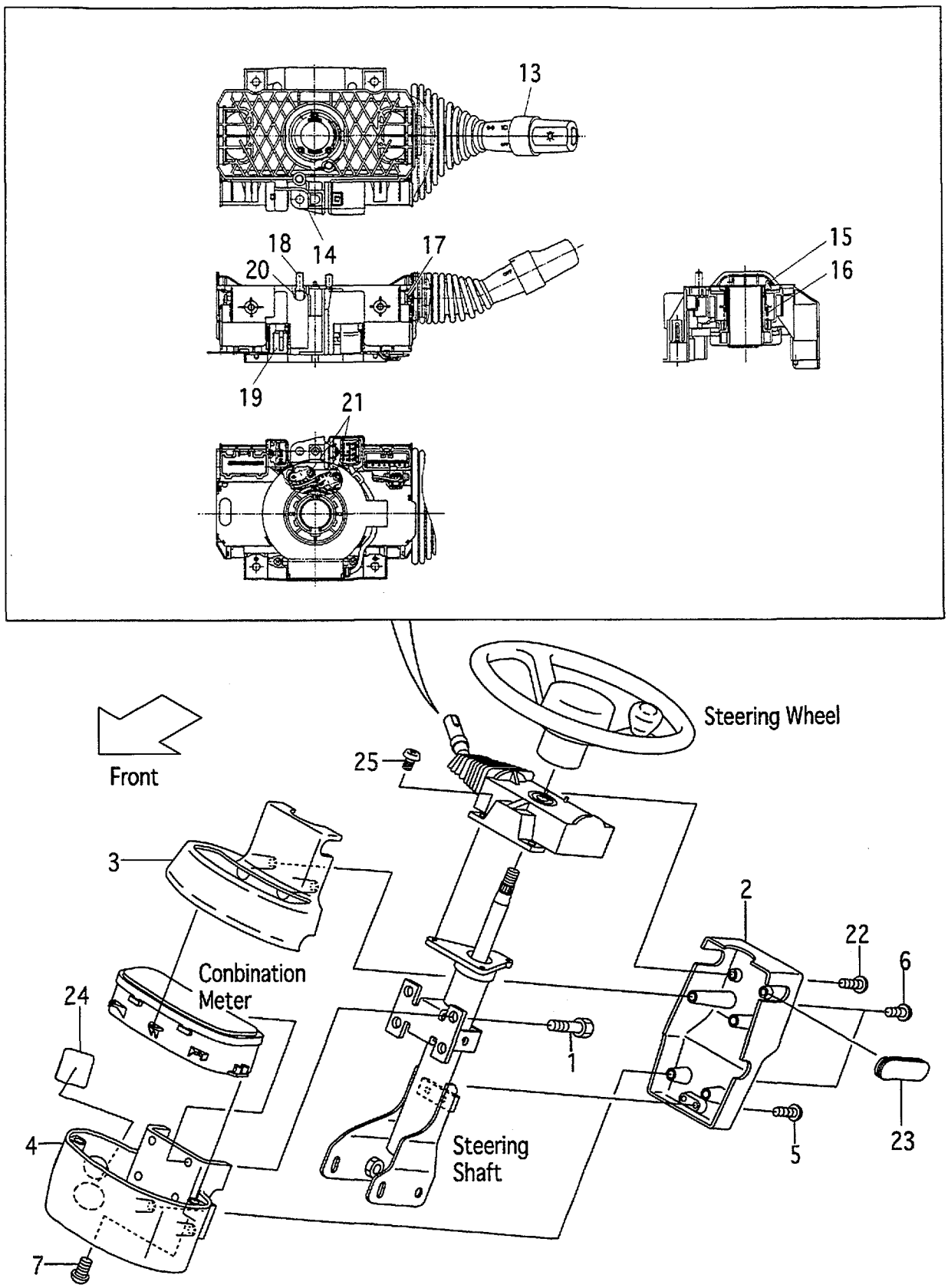

A:FG20C6H D:FG25W6H G:FD20W6H
B:FG25C6H E:FD20C6H H:FD25W6H
C:FG20W6H F:FD25C6H

FIG.28
(F5H22430)

Item No	Part No.	Mark	Description		Req'd	Remarks : Serial No.
1	01185-06016		BOLT	ﾎﾞﾙﾄ	4	
2	239A4-12501		COVER,HANDLE,A	ｶﾊﾞｰ	1	
3	239A4-12511		COVER,HANDLE,B	ｶﾊﾞｰ	1	
4	239A4-12521		COVER,HANDLE,C	ｶﾊﾞｰ	1	
-	539A7-72001		COVER,HANDLE,C	ｶﾊﾞｰ	1	[SWD]
-	536K6-02271		COVER,HANDLE,C	ｶﾊﾞｰ	1	B,D
						[CNG]
5	214A6-42771		SCREW	ｽｸﾘｭ	2	
6	222A2-42031		SCREW	ｽｸﾘｭ	4	
7	216G4-12091		SCREW	ｽｸﾘｭ	2	
8	04913-11200	+	BAND	ﾊﾞﾝﾄﾞ	1	
9	216G2-42131	+	BAND	ﾊﾞﾝﾄﾞ	14	
10	04913-10100	+	BAND	ﾊﾞﾝﾄﾞ	6	
11	04913-11100	+	BAND	ﾊﾞﾝﾄﾞ	2	
12	04913-10200	+	BAND	ﾊﾞﾝﾄﾞ	2	
A1	239A2-40501		SWITCH-ASSY,COMBINATION		1	INC.13-21
				ｺﾝﾋﾞﾈｰｼｮﾝｽｲｯﾁｱｯｾﾝ		
13	280C2-42331		SWITCH,TURN-SIGNAL	ｽｲｯﾁ	1	
14	NO PART NO.	#	BODY	ﾎﾞﾃﾞｨ	1	
15	NO PART NO.	#	CAM,CANCEL,RH	ｶﾑ	1	
16	NO PART NO.	#	SPRING	ｽﾌﾟﾘﾝｸﾞ	1	
17	NO PART NO.	#	SCREW	ｽｸﾘｭ	4	
18	280C2-42351		CONTACT,HORN	ｺﾝﾀｸﾄ	2	
19	NO PART NO.	#	CODE,CP-HORN	ｺｰﾄﾞ	1	
20	NO PART NO.	#	SPRING	ｽﾌﾟﾘﾝｸﾞ	2	
21	NO PART NO.	#	SCREW	ｽｸﾘｭ	2	
22	209K2-43001		SCREW	ｽｸﾘｭ	2	
23	239A4-12541		GROMMET,HANDLE-COVEF	ｸﾞﾛﾒｯﾄ	1	
24	229F6-42201		SEAL,PANEL-COVER,A	ｼｰﾙ	1	
25	01033-05014		SCREW	ｽｸﾘｭ	3	

FIG.29 STEERING SHAFT COVER (TOR-CON)

(F5H22440) ステアリング゛シャフトカバ゛ー

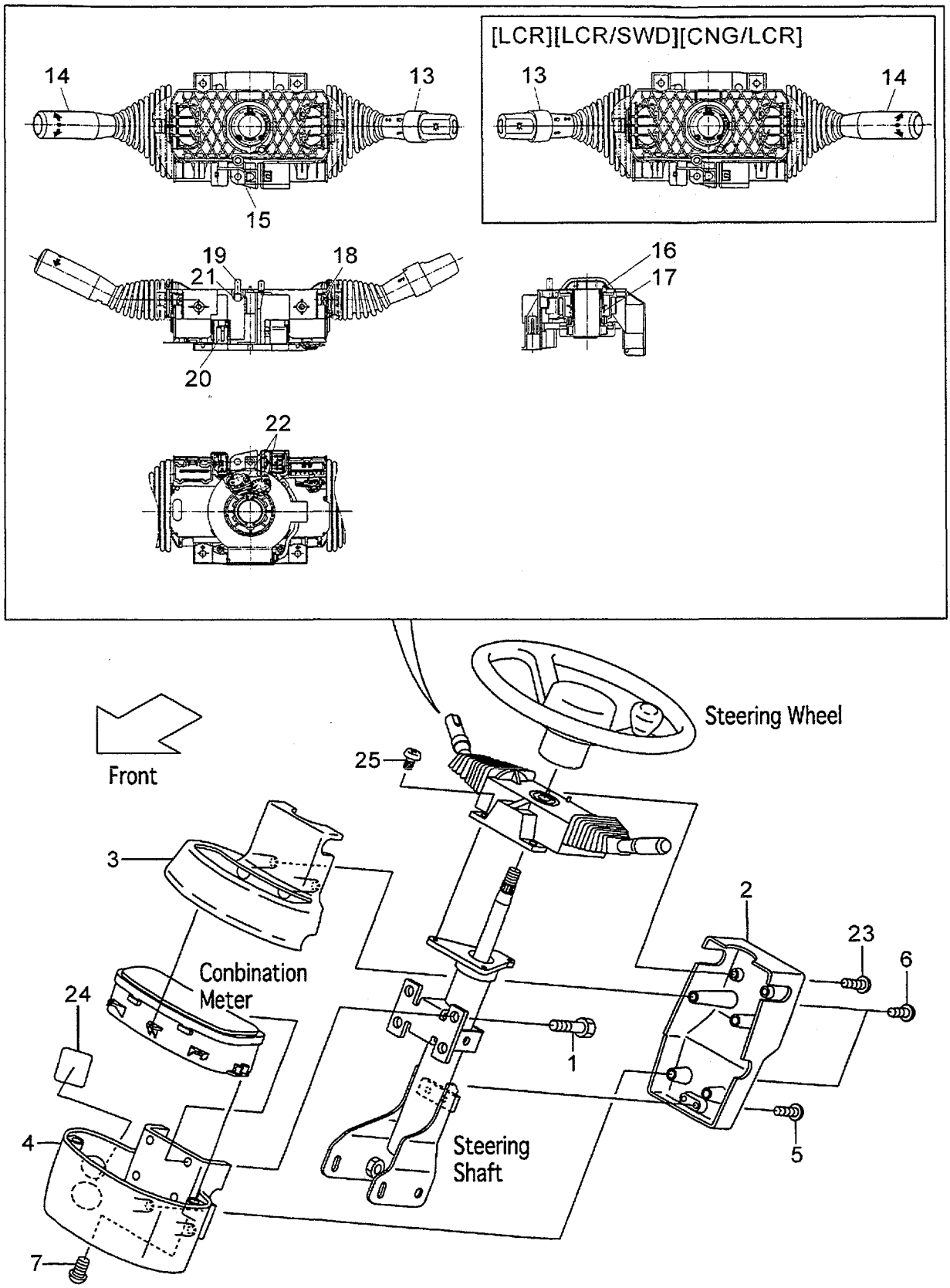

A:FG20T6H C:FD20T6H
B:FG25T6H D:FD25T6H

FIG.29
(F5H22440)

Item No	Part No.	Mark	Description		Req'd	Remarks : Serial No.
1	01185-06016		BOLT	ﾎﾞﾙﾄ	4	
2	239A4-12501		COVER,HANDLE,A	ｶﾊﾞｰ	1	
3	239A4-12511		COVER,HANDLE,B	ｶﾊﾞｰ	1	
4	239A4-12521		COVER,HANDLE,C	ｶﾊﾞｰ	1	
-	539A7-72001		COVER,HANDLE,C	ｶﾊﾞｰ	1	[SWD][LCR/SWD]
-	536K6-02271		COVER,HANDLE,C	ｶﾊﾞｰ	1	B
						[CNG][CNG/LCR]
5	214A6-42771		SCREW	ｽｸﾘｭ	2	
6	222A2-42031		SCREW	ｽｸﾘｭ	4	
7	216G4-12091		SCREW	ｽｸﾘｭ	2	
8	04913-11200	+	BAND	ﾊﾞﾝﾄﾞ	1	
9	216G2-42131	+	BAND	ﾊﾞﾝﾄﾞ	14	
10	04913-10100	+	BAND	ﾊﾞﾝﾄﾞ	6	
11	04913-11100	+	BAND	ﾊﾞﾝﾄﾞ	2	
12	04913-10200	+	BAND	ﾊﾞﾝﾄﾞ	2	
A1	209K2-40501		SWITCH-ASSY,COMBINATION		1	INC.13-22
				ｺﾝﾋﾞﾈｰｼｮﾝｽｲｯﾁｱｯｾﾝ		
-	509K2-30101		SWITCH-ASSY,COMBINATION		1	[LCR][LCR/SWD] INC.13-22
				ｺﾝﾋﾞﾈｰｼｮﾝｽｲｯﾁｱｯｾﾝ		
-	509K2-30101		SWITCH-ASSY,COMBINATION		1	B
				ｺﾝﾋﾞﾈｰｼｮﾝｽｲｯﾁｱｯｾﾝ		[CNG/LCR] INC.13-22
13	280C2-42331		SWITCH,TURN-SIGNAL	ｽｲｯﾁ	1	
-	280C2-42301		SWITCH,TURN-SIGNAL	ｽｲｯﾁ	1	[LCR][LCR/SWD]
-	280C2-42301		SWITCH,TURN-SIGNAL	ｽｲｯﾁ	1	B
						[CNG/LCR]
14	280C2-42341		SWITCH,DIRECTION	ｽｲｯﾁ	1	
-	280C2-42311		SWITCH,DIRECTION	ｽｲｯﾁ	1	[LCR][LCR/SWD]
-	280C2-42311		SWITCH,DIRECTION	ｽｲｯﾁ	1	B
						[CNG/LCR]
15	NO PART NO.	#	BODY	ﾎﾞﾃﾞｨ	1	
16	NO PART NO.	#	CAM,CANCEL,RH	ｶﾑ	1	
-	NO PART NO.	#	CAM,CANCEL,RH	ｶﾑ	1	[LCR][LCR/SWD]
-	NO PART NO.	#	CAM,CANCEL,RH	ｶﾑ	1	B
						[CNG/LCR]
17	NO PART NO.	#	SPRING	ｽﾌﾟﾘﾝｸﾞ	1	
18	NO PART NO.	#	SCREW	ｽｸﾘｭ	4	
19	280C2-42351		CONTACT,HORN	ｺﾝﾀｸﾄ	2	
20	NO PART NO.	#	CODE,CP-HORN	ｺｰﾄﾞ	1	
21	NO PART NO.	#	SPRING	ｽﾌﾟﾘﾝｸﾞ	2	
22	NO PART NO.	#	SCREW	ｽｸﾘｭ	2	
23	209K2-43001		SCREW	ｽｸﾘｭ	2	
24	229F6-42201		SEAL,PANEL-COVER,A	ｼｰﾙ	1	
25	01033-05014		SCREW	ｽｸﾘｭ	3	

FIG.30 ELECTRIC PARTS (1/2)(GASOLINE)

(F5H22450) エレクトリックパーツ(1/2)

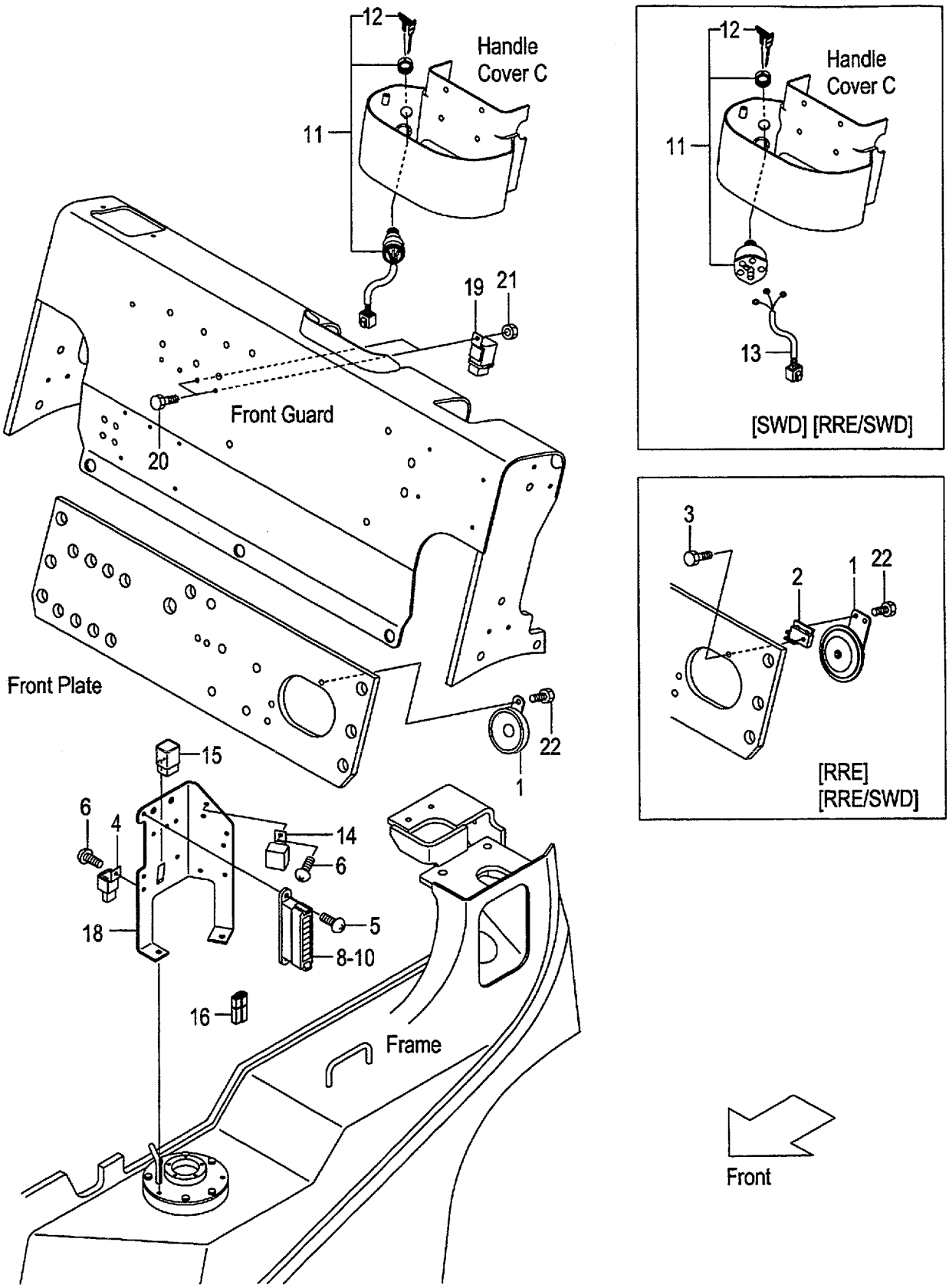

A:FG20C6H FG20T6H C:FG20W6H
B:FG25C6H FG25T6H D:FG25W6H

FIG.30
(F5H22450)

Item No	Part No.	Mark	Description		Req'd	Remarks : Serial No.
1	216G2-43651		HORN	ﾎｰﾝ	1	
-	20712-40275		HORN	ﾎｰﾝ	1	[RRE][RRE/SWD]
2	539A9-92001		BRACKET,HORN	ﾌﾞﾗｹｯﾄ	1	[RRE][RRE/SWD]
3	01183-06025		BOLT	ﾎﾞﾙﾄ	1	[RRE][RRE/SWD]
4	216G2-43711		UNIT,FLASHER	ﾕﾆｯﾄ	1	
5	214A2-42621		SCREW	ｽｸﾘｭ	2	
6	214A2-42611		SCREW	ｽｸﾘｭ	2	
7	04913-10200	+	BAND	ﾊﾞﾝﾄﾞ	2	
8	235C2-40301		BOX,FUSE	ﾎﾞｯｸｽ	1	INC.9,10
9	214T2-42311		FUSE,10A	ﾋｭｰｽﾞ	7	
10	214T2-42321		FUSE,30A	ﾋｭｰｽﾞ	1	
11	216G2-42312		SWITCH,STARTER	ｽｲｯﾁ	1	INC.12
-	24352-42521		SWITCH,STARTER	ｽｲｯﾁ	1	[SWD][RRE/SWD] INC.12
12	216G2-43401		KEY,SPARE,511323	ｷｰ	1	(1SET=2PCS)
-	216G2-43411		KEY,SPARE,512421	ｷｰ	(1)	(1SET=2PCS)
-	216G2-43421		KEY,SPARE,513454	ｷｰ	(1)	(1SET=2PCS)
-	93956-59279		KEY,SPARE	ｷｰ	1	[SWD][RRE/SWD] (1SET=2PCS)
13	534A7-72001		WIRE,LEAD	ﾜｲﾔ	1	[SWD][RRE/SWD]
14	217G2-42301		RELAY,STARTER	ﾘﾚｰ	1	1-15012
-	216G2-42321		RELAY,STARTER	ﾘﾚｰ	1	15013-
15	228F2-42131		RELAY,AUTO-CHOKE	ﾘﾚｰ	1	
16	21152-42091		DIODE,MOLD-UNIT	ﾀﾞｲｵｰﾄﾞ	1	
17	234B2-42201	+	TIE,PUSH-MOUNT	ﾀｲ	1	
18	218G2-42001		BRACKET,ELECTRIC	ﾌﾞﾗｹｯﾄ	1	
19	26062-42881		RELAY,12V	ﾘﾚｰ	2	
20	239A5-42381		BOLT	ﾎﾞﾙﾄ	2	
21	01400-00006		NUT	ﾅｯﾄ	2	
22	01185-08016		BOLT	ﾎﾞﾙﾄ	1	
-	01183-06016		BOLT	ﾎﾞﾙﾄ	2	[RRE][RRE/SWD]

FIG.31 ELECTRIC PARTS (1/2)(DIESEL)

(F5H22460) エレクトリックパーツ(1/2)

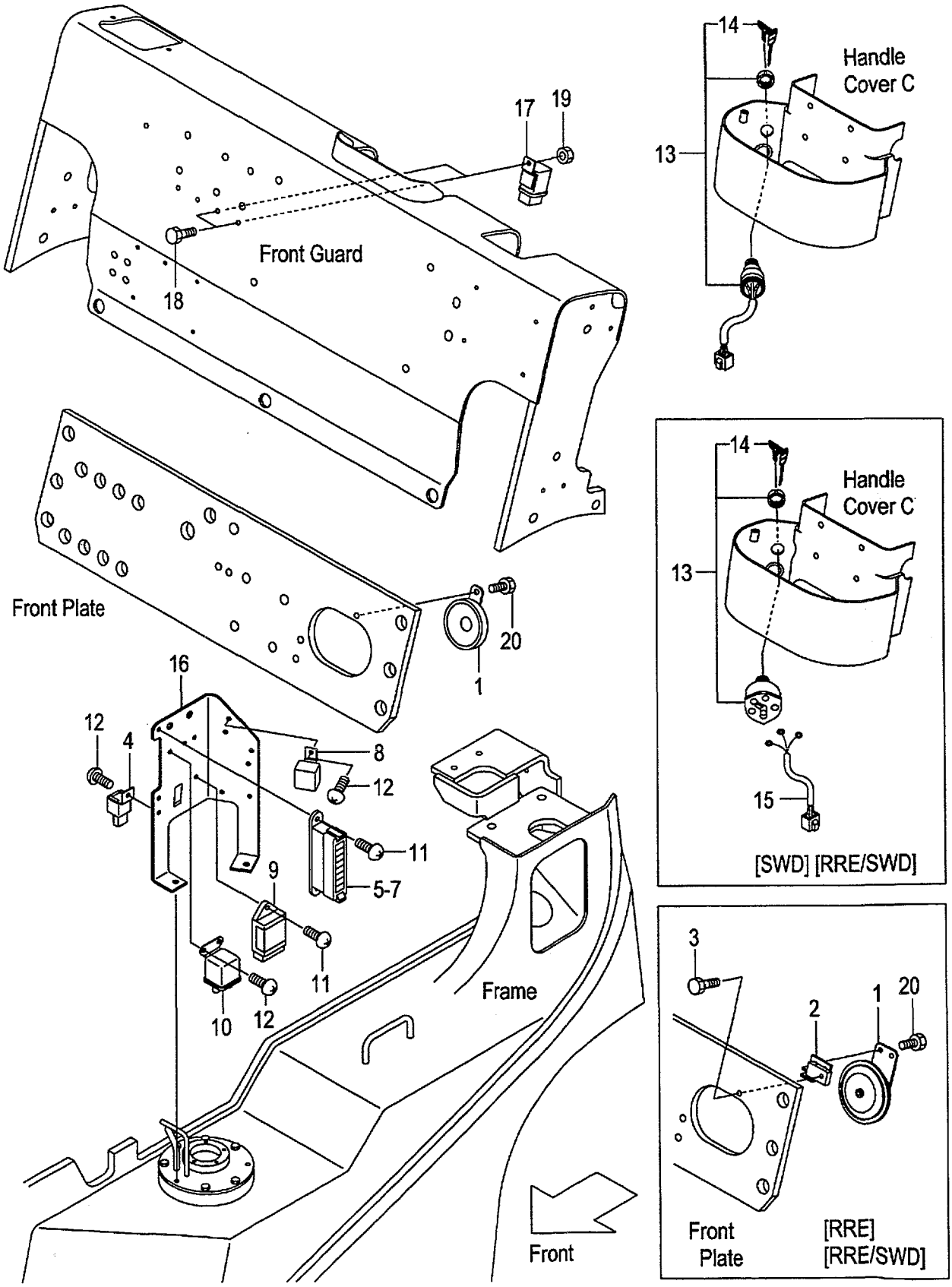

A:FD20C6H FD20T6H FD25C6H FD25T6H
B:FD20W6H FD25W6H

FIG.31
(F5H22460)

Item No	Part No.	Mark	Description		Req'd	Remarks : Serial No.
1	216G2-43651		HORN	ﾎｰﾝ	1	
-	20712-40275		HORN	ﾎｰﾝ	1	[RRE][RRE/SWD]
2	539A9-92001		BRACKET,HORN	ﾌﾞﾗｹｯﾄ	1	[RRE][RRE/SWD]
3	01183-06025		BOLT	ﾎﾞﾙﾄ	1	[RRE][RRE/SWD]
4	216G2-43711		UNIT,FLASHER	ﾕﾆｯﾄ	1	
5	235C2-40301		BOX,FUSE	ﾎﾞｯｸｽ	1	INC.6,7
6	214T2-42311		FUSE,10A	ﾋｭｰｽﾞ	7	
7	214T2-42321		FUSE,30A	ﾋｭｰｽﾞ	1	
8	217G2-42301		RELAY,STARTER	ﾘﾚｰ	1	1-150
-	216G2-42321		RELAY,STARTER	ﾘﾚｰ	1	151-
9	239A2-42311		TIMER,QOS-3	ﾀｲﾏ	1	
10	239A2-42301		RELAY,GLOW-PLUG	ﾘﾚｰ	1	
11	214A2-42621		SCREW	ｽｸﾘｭ	3	
12	214A2-42611		SCREW	ｽｸﾘｭ	4	
13	216G2-42312		SWITCH,STARTER	ｽｲｯﾁ	1	INC.14
-	24352-42521		SWITCH,STARTER	ｽｲｯﾁ	1	[SWD][RRE/SWD] INC.14
14	216G2-43401		KEY,SPARE,511323	ｷｰ	1	(1SET=2PCS)
-	216G2-43411		KEY,SPARE,512421	ｷｰ	(1)	(1SET=2PCS)
-	216G2-43421		KEY,SPARE,513454	ｷｰ	(1)	(1SET=2PCS)
-	93956-59279		KEY,SPARE	ｷｰ	1	[SWD][RRE/SWD] (1SET=2PCS)
15	534A7-72001		WIRE,LEAD	ﾜｲﾔ	1	[SWD][RRE/SWD]
16	218G2-42001		BRACKET,ELECTRIC	ﾌﾞﾗｹｯﾄ	1	
17	26062-42881		RELAY,12V	ﾘﾚｰ	2	
18	239A5-42381		BOLT	ﾎﾞﾙﾄ	2	
19	01400-00006		NUT	ﾅｯﾄ	2	
20	01185-08016		BOLT	ﾎﾞﾙﾄ	1	
-	01183-06016		BOLT	ﾎﾞﾙﾄ	2	[RRE][RRE/SWD]

FIG.32 ELECTRIC PARTS (2/2)(GASOLINE)

(F5H22470) エレクトリックパーツ(2/2)

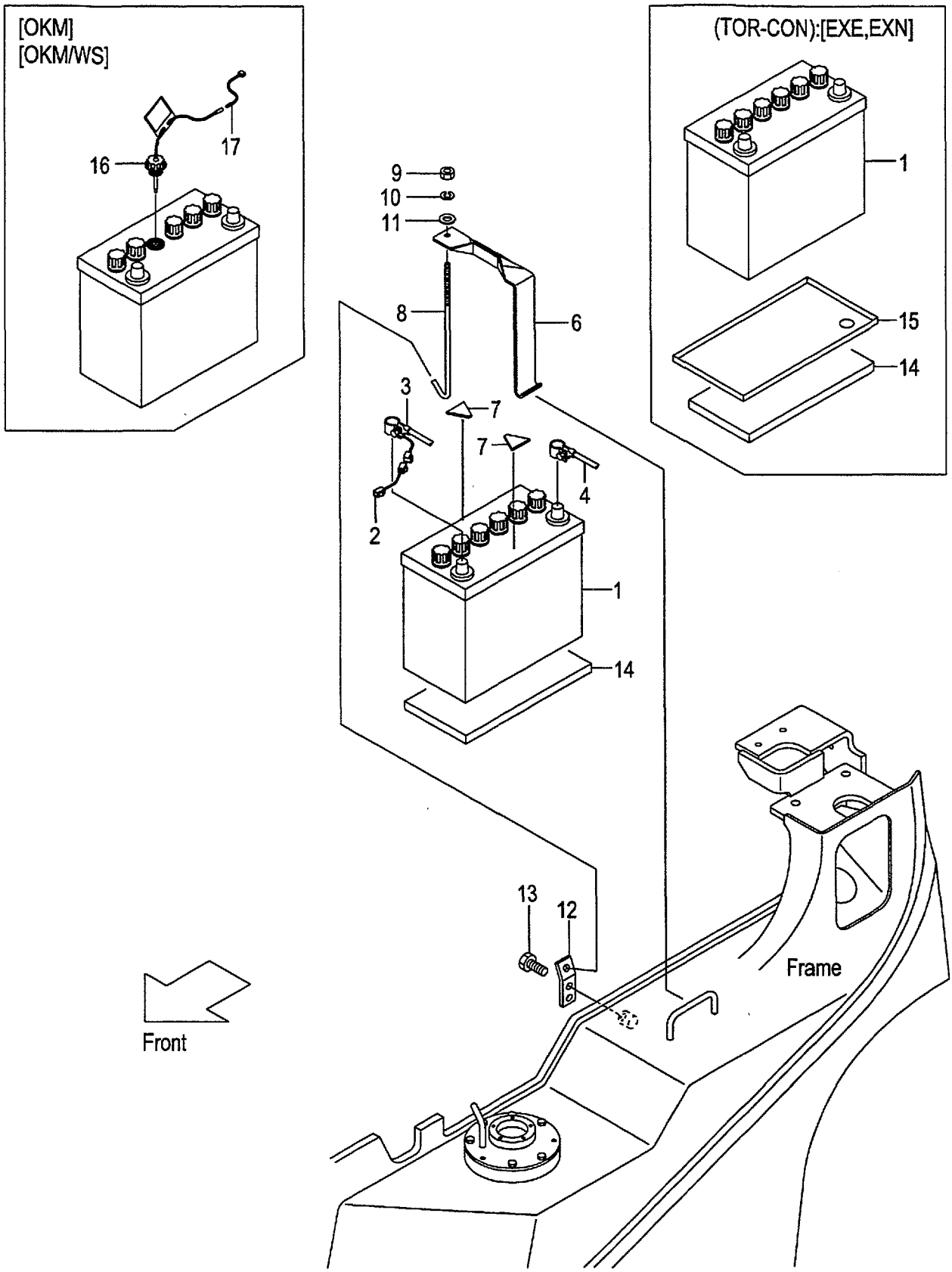

A:FG20C6H FG25C6H
B:FG20T6H FG25T6H
C:FG20W6H FG25W6H

FIG.32
(F5H22470)

Item No	Part No.	Mark	Description		Req'd	Remarks : Serial No.
1	225R2-42001		BATTERY,WET,55B24R	ﾊﾞｯﾃﾘ	1	
-	217G2-42051		BATTERY,WET,65D23R	ﾊﾞｯﾃﾘ	1	[WS]
2	25592-42081		WIRE,FUSIBLE-LINK	ﾜｲﾔ	1	
3	237A2-42151		CABLE,BATTERY(+)	ｹｰﾌﾞﾙ	1	
-	217G2-42151		CABLE,BATTERY(+)	ｹｰﾌﾞﾙ	1	[WS]
-	216G2-43151		CABLE,BATTERY(+)	ｹｰﾌﾞﾙ	1	B
						[EXE][EXN]
4	212T2-42311		CABLE,BATTERY(-)	ｹｰﾌﾞﾙ	1	
-	238A2-42151		CABLE,BATTERY(-)	ｹｰﾌﾞﾙ	1	[WS]
-	536G3-82201		CABLE,BATTERY(-)	ｹｰﾌﾞﾙ	1	B
						[EXE][EXN]
5	516G3-82521	+	TERMINAL,BATTERY	ﾀｰﾐﾅﾙ	1	B
						[EXE][EXN]
6	216G2-42071		HOLDER,BATTERY	ﾎﾙﾀﾞ	1	
-	217G2-42021		HOLDER,BATTERY	ﾎﾙﾀﾞ	1	[WS]
7	216G2-43111		RUBBER	ﾗﾊﾞｰ	2	
8	256A2-42171		BOLT,ANCHOR	ﾎﾞﾙﾄ	1	
9	01420-00006		NUT	ﾅｯﾄ	1	
10	02010-00006		WASHER	ﾜｯｼｬ	1	
11	23452-42181		WASHER	ﾜｯｼｬ	1	
12	218G2-42101		HOOK,ANCHOR-BOLT	ﾌｯｸ	1	
-	239A2-42101		HOOK,ANCHOR-BOLT	ﾌｯｸ	1	[WS]
13	01185-08016		BOLT	ﾎﾞﾙﾄ	1	
14	239A2-42031		RUBBER	ﾗﾊﾞｰ	1	
15	518G2-72121		CASE,BATTERY	ｹｰｽ	1	B
						[EXE][EXN]
16	522A7-12211		CAP,BATTERY	ｷｬｯﾌﾟ	1	[OKM]
-	521A2-42001		CAP,BATTERY	ｷｬｯﾌﾟ	1	[OKM/WS]
17	539A6-22021		WIRE,LEAD	ﾜｲﾔ	1	[OKM][OKM/WS]

FIG.33 ELECTRIC PARTS (2/2)(DIESEL)

(F5H22480) エレクトリックパーツ(2/2)

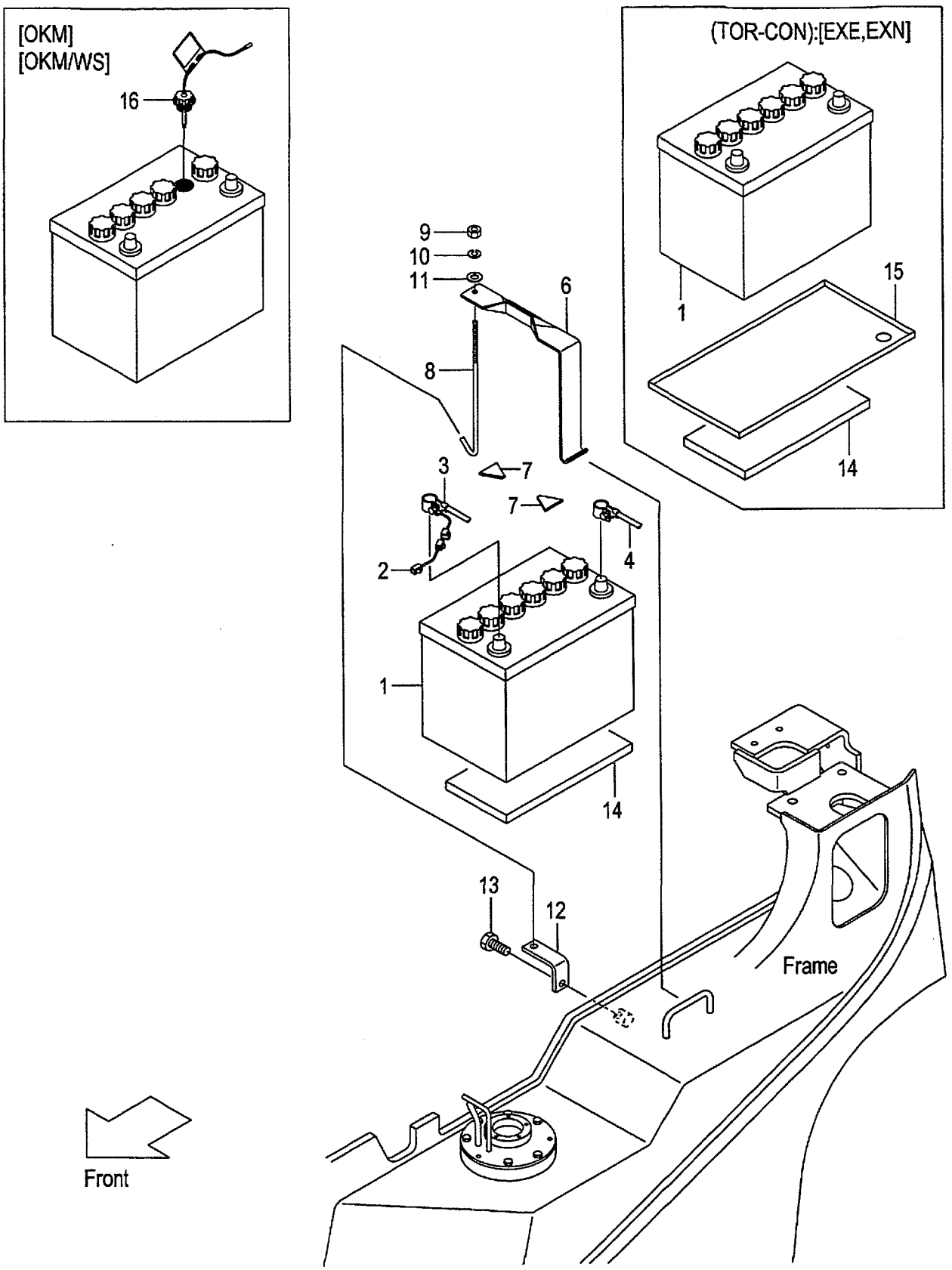

A:FD20C6H FD25C6H
B:FD20T6H FD25T6H
C:FD20W6H FD25W6H

FIG.33
(F5H22480)

Item No	Part No.	Mark	Description		Req'd	Remarks : Serial No.
1	230C2-42301		BATTERY,WET,95D31R	ﾊﾞｯﾃﾘ	1	
-	534A7-02001		BATTERY,WET,115D31R	ﾊﾞｯﾃﾘ	1	[WS]
2	25592-42081		WIRE,FUSIBLE-LINK	ﾜｲﾔ	1	
3	239A2-42151		CABLE,BATTERY(+)	ｹｰﾌﾞﾙ	1	
-	234A2-42151		CABLE,BATTERY(+)	ｹｰﾌﾞﾙ	1	B [EXE][EXN]
4	54612-72281		CABLE,BATTERY(-)	ｹｰﾌﾞﾙ	1	
-	539B3-82201		CABLE,BATTERY(-)	ｹｰﾌﾞﾙ	1	B [EXE][EXN]
5	530C3-82361	+	TERMINAL,BATTERY	ﾀｰﾐﾅﾙ	1	B [EXE][EXN]
6	217G2-42021		HOLDER,BATTERY	ﾎﾙﾀﾞ	1	
7	216G2-43111		RUBBER	ﾗﾊﾞｰ	2	
8	256A2-42171		BOLT,ANCHOR	ﾎﾞﾙﾄ	1	
9	01420-00006		NUT	ﾅｯﾄ	1	
10	02010-00006		WASHER	ﾜｯｼｬ	1	
11	23452-42181		WASHER	ﾜｯｼｬ	1	
12	239A2-42101		HOOK,ANCHOR-BOLT	ﾌｯｸ	1	
13	01185-08016		BOLT	ﾎﾞﾙﾄ	1	
14	239A2-42031		RUBBER	ﾗﾊﾞｰ	1	
15	539A2-72121		CASE,BATTERY	ｹｰｽ	1	B [EXE][EXN]
16	522A2-42001		CAP,BATTERY	ｷｬｯﾌﾟ	1	[OKM][OKM/WS]

FIG.34 FRONT GUARD WIRE HARNESS (CLUTCH & OIL CLUTCH)

(F5H224C0) ﾌﾛﾝﾄｶﾞｰﾄﾞﾜｲﾔﾊｰﾈｽ

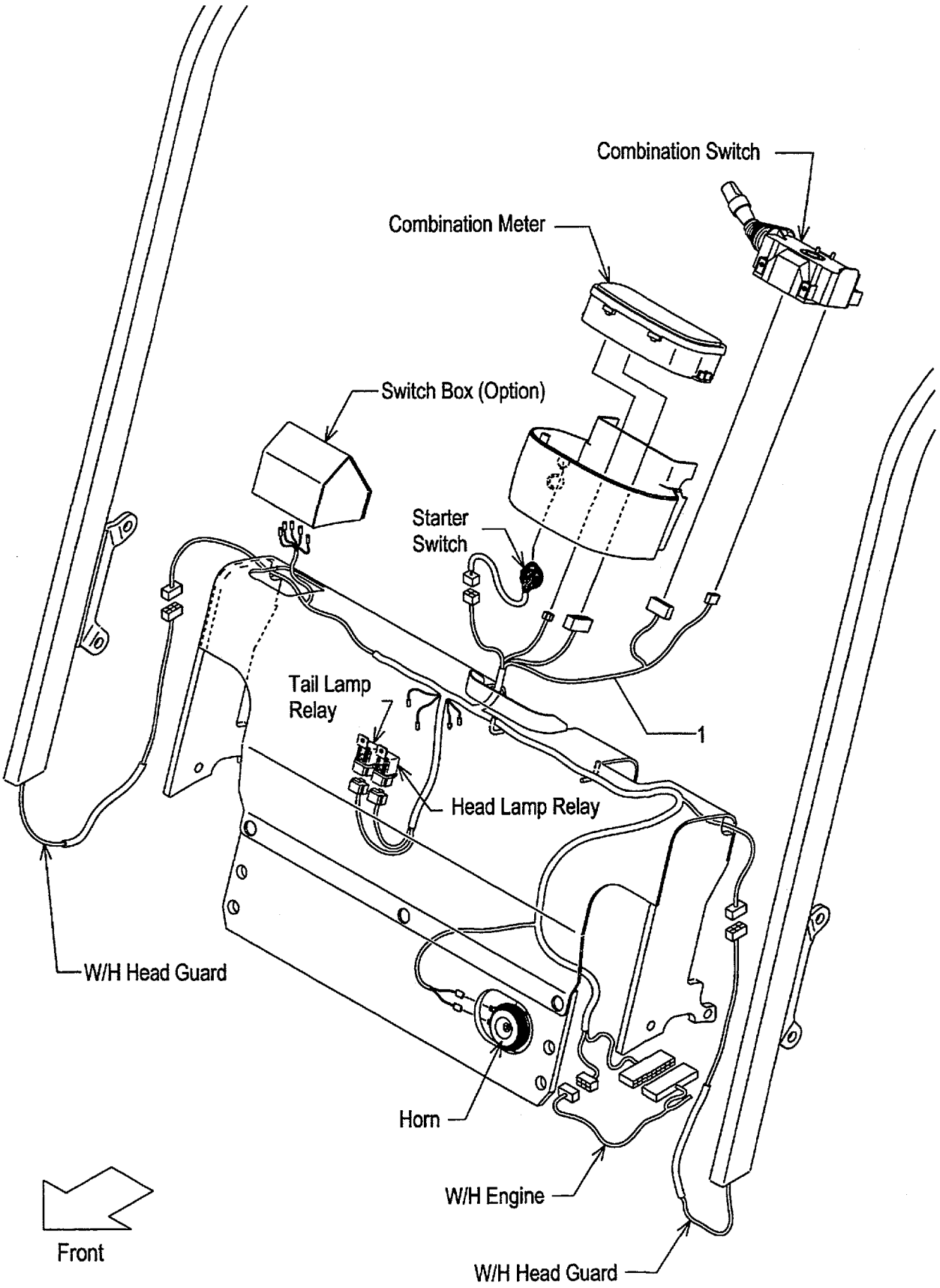

FIG.34
(F5H224C0)

A:FG20C6H FG25C6H C:FD20C6H FD25C6H
B:FG20W6H FG25W6H D:FD20W6H FD25W6H

Item No	Part No.	Mark	Description	Req'd	Remarks : Serial No.
1	239A2-42201		WIRE-HARNESS,F.GUARD ﾜｲﾔﾊｰﾈｽ	1	
-	539A3-72151		WIRE-HARNESS,F.GUARD ﾜｲﾔﾊｰﾈｽ	1	[FC]

FIG.35 FRONT GUARD WIRE HARNESS (TOR-CON)

(F5H224D0) フロントガードワイヤハーネス

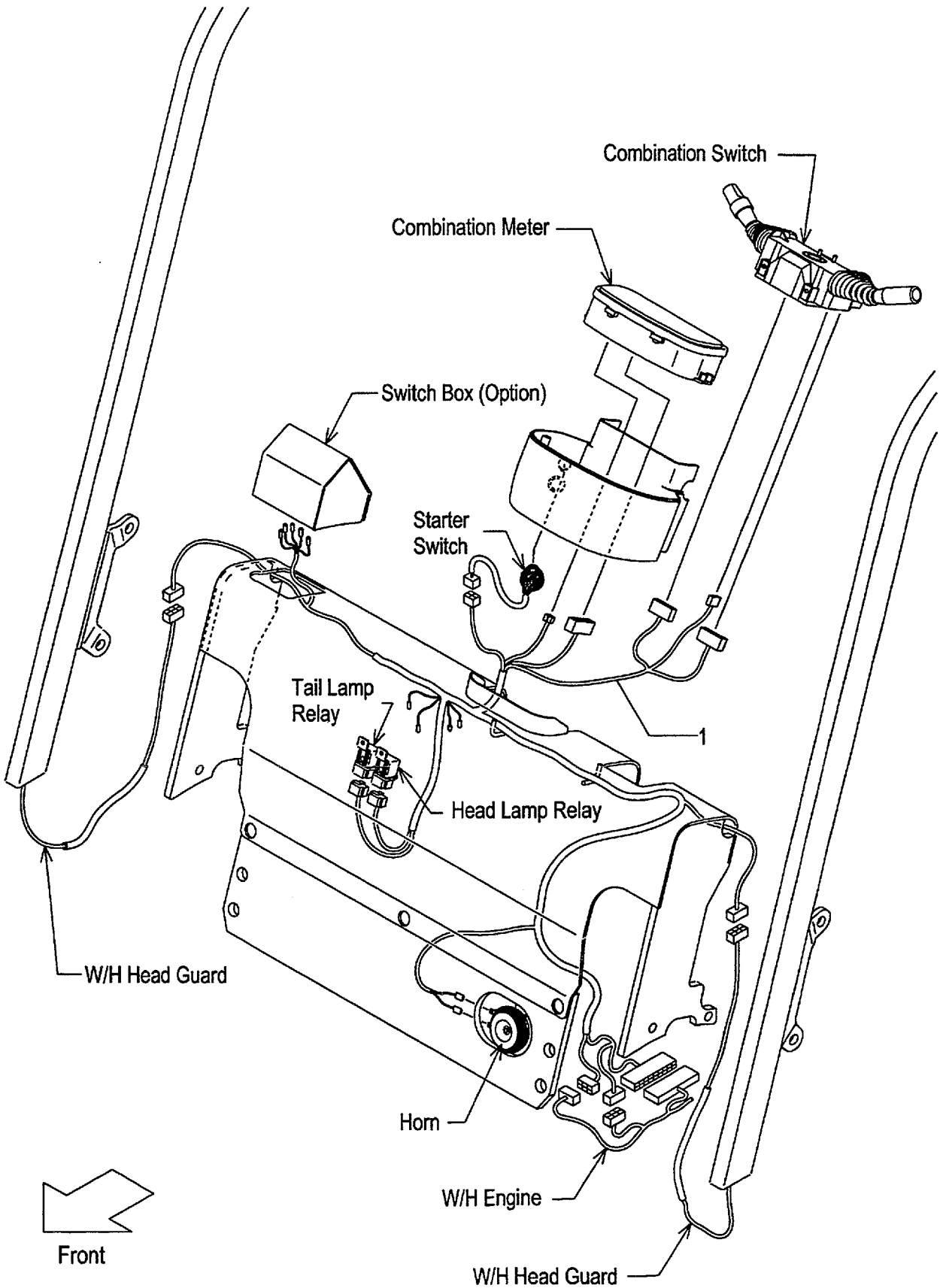

A:FG20T6H FG25T6H
B:FD20T6H FD25T6H

FIG.35
(F5H224D0)

Item No	Part No.	Mark	Description	Req'd	Remarks : Serial No.
1	239B2-42201		WIRE-HARNESS,F.GUARD ﾜｲﾔﾊｰﾈｽ	1	
-	539B3-82301		WIRE-HARNESS,F.GUARD ﾜｲﾔﾊｰﾈｽ	1	[EXE][EXN]
-	539B2-32201		WIRE-HARNESS,F.GUARD ﾜｲﾔﾊｰﾈｽ	1	[LCR]
-	539B3-72151		WIRE-HARNESS,F.GUARD ﾜｲﾔﾊｰﾈｽ	1	[FC]
-	539B3-72201		WIRE-HARNESS,F.GUARD ﾜｲﾔﾊｰﾈｽ	1	[FC/LCR]

ENGINE WIRE HARNESS
FIG.36 (GASOLINE:CLUTCH & OIL CLUTCH)

(F5H224E0) エンジンワイヤハーネス

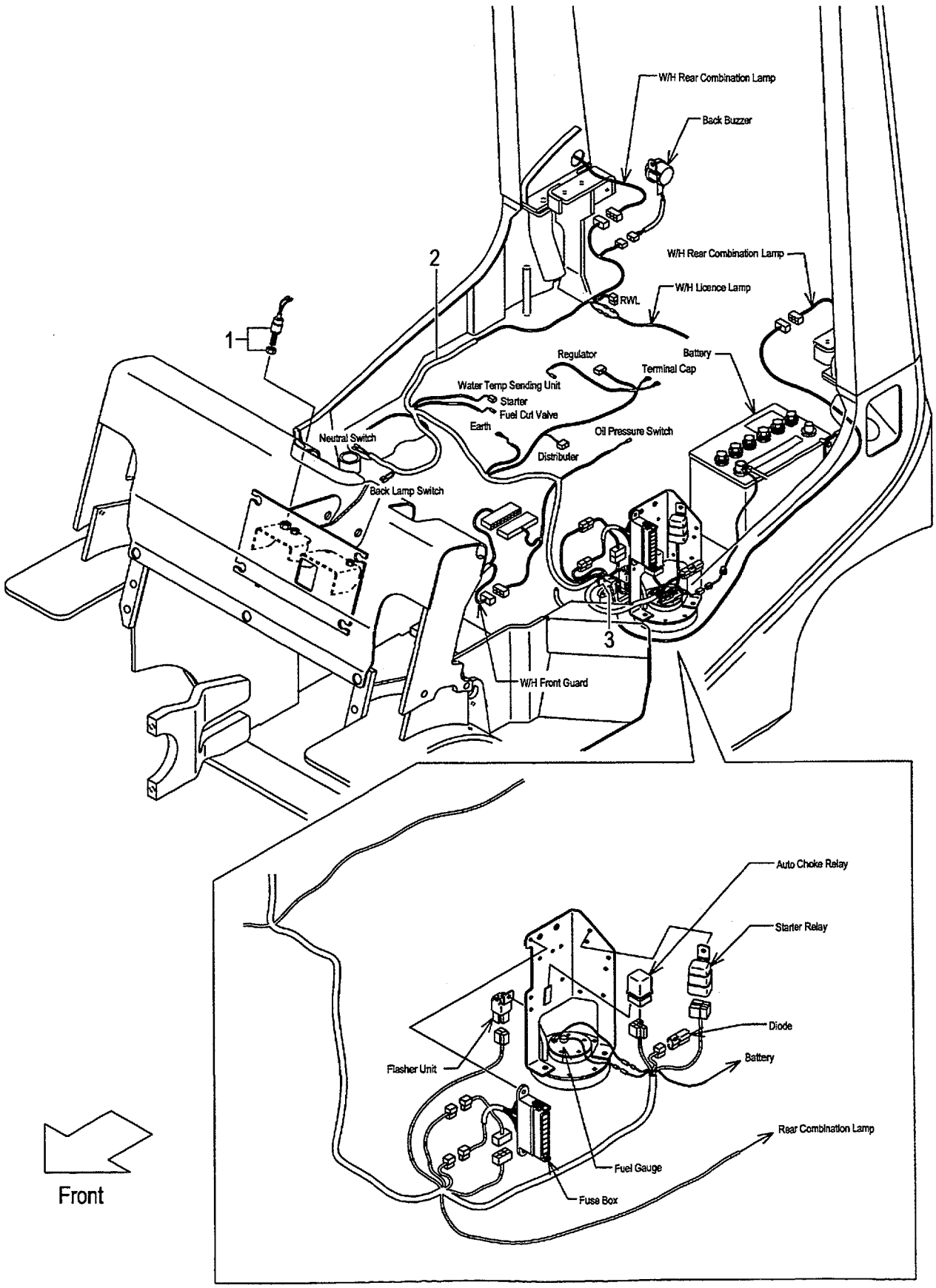

A:FG20C6H FG25C6H
B:FG20W6H FG25W6H

FIG.36
(F5H224E0)

Item No	Part No.	Mark	Description		Req'd	Remarks : Serial No.
1	23232-42072		SWITCH,STOP-LAMP	ｽｲｯﾁ	1	
2	237A2-42211		WIRE-HARNESS,ENGINE	ﾜｲﾔﾊｰﾈｽ	1	1-15012
-	237A2-42212		WIRE-HARNESS,ENGINE	ﾜｲﾔﾊｰﾈｽ	1	15013-
-	537A3-72021		WIRE-HARNESS,ENGINE	ﾜｲﾔﾊｰﾈｽ	1	[FC]
-	537A2-72011		WIRE-HARNESS,ENGINE	ﾜｲﾔﾊｰﾈｽ	1	A [EECG]
-	537A2-72021		WIRE-HARNESS,ENGINE	ﾜｲﾔﾊｰﾈｽ	1	A [EECLP]
3	214A2-42331		CLIP	ｸﾘｯﾌﾟ	3	

FIG.37 ENGINE WIRE HARNESS (GASOLINE:TOR-CON)

(F5H224F0) エンジンワイヤハーネス

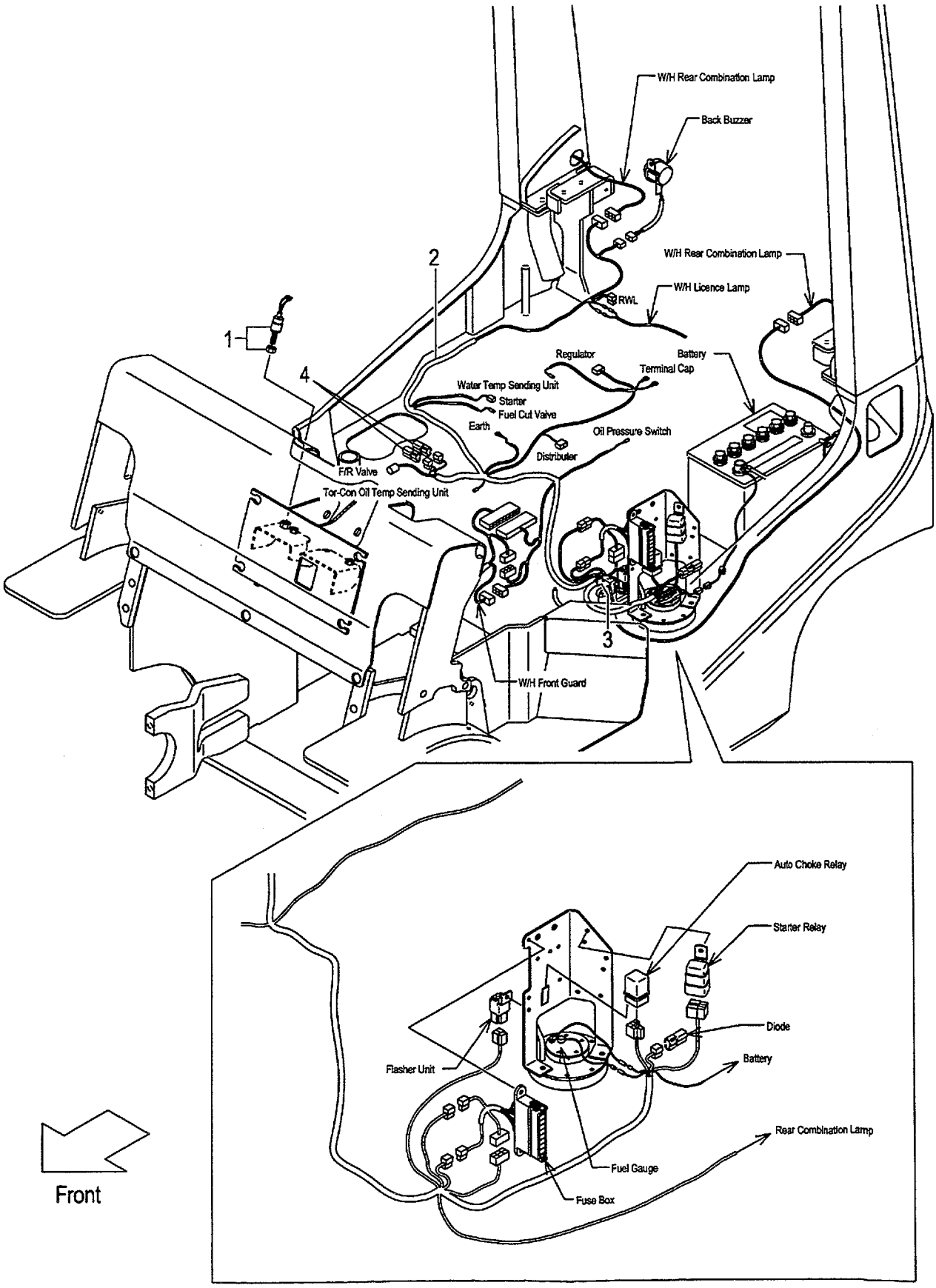

A:FG20T6H FG25T6H

Item No	Part No.	Mark	Description		Req'd	Remarks : Serial No.
1	23232-42072		SWITCH,STOP-LAMP	ｽｲｯﾁ	1	
2	237B2-42211		WIRE-HARNESS,ENGINE	ﾜｲﾔﾊｰﾈｽ	1	1-15012
-	237B2-42212		WIRE-HARNESS,ENGINE	ﾜｲﾔﾊｰﾈｽ	1	15013-
-	537B3-72021		WIRE-HARNESS,ENGINE	ﾜｲﾔﾊｰﾈｽ	1	[FC]
-	537B2-72011		WIRE-HARNESS,ENGINE	ﾜｲﾔﾊｰﾈｽ	1	[EECG]
-	537B2-72021		WIRE-HARNESS,ENGINE	ﾜｲﾔﾊｰﾈｽ	1	[EECLP]
3	214A2-42331		CLIP	ｸﾘｯﾌﾟ	3	
4	230C2-42201		DIODE,3A	ﾀﾞｲｵｰﾄﾞ	2	

ENGINE WIRE HARNESS
FIG.38 (DIESEL:CLUTCH & OIL CLUTCH)

(F5H224H0) エンジンワイヤハーネス

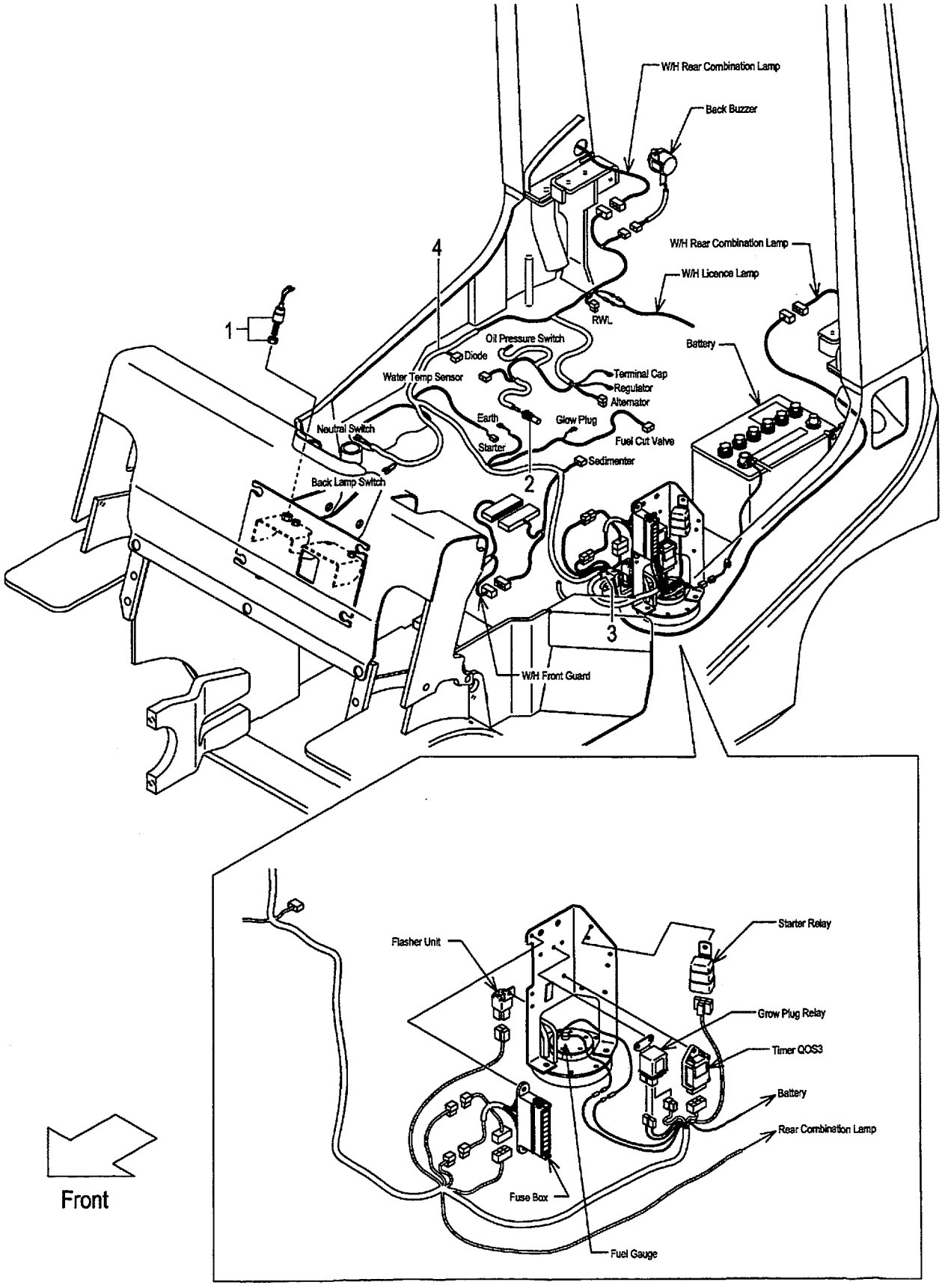

A:FD20C6H FD25C6H
B:FD20W6H FD25W6H

FIG.38
(F5H224H0)

Item No	Part No.	Mark	Description	Req'd	Remarks : Serial No.
1	23232-42072		SWITCH,STOP-LAMP スイッチ	1	
2	23652-44001		UNIT,SENDING ユニット	1	
3	214A2-42331		CLIP クリップ	5	
4	239A2-42211		WIRE-HARNESS,ENGINE ワイヤハーネス	1	1-150
-	239A2-42212		WIRE-HARNESS,ENGINE ワイヤハーネス	1	151-
-	539A3-72021		WIRE-HARNESS,ENGINE ワイヤハーネス	1	[FC]

FIG.39 ENGINE WIRE HARNESS (DIESEL:TOR-CON)

(F5H224K0) エンジンワイヤハーネス

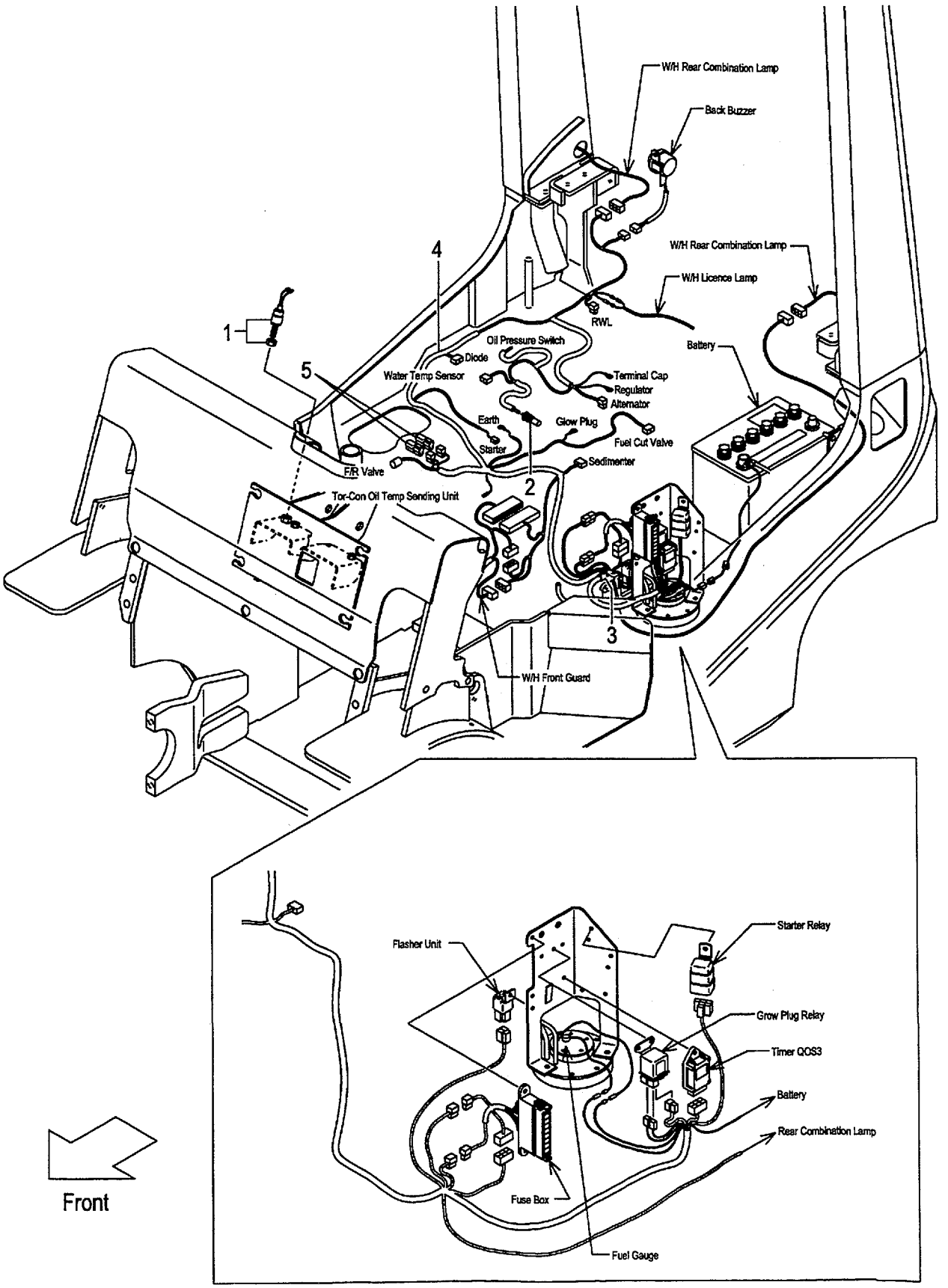

A:FD20T6H FD25T6H

Item No	Part No.	Mark	Description	Req'd	Remarks : Serial No.
1	23232-42072		SWITCH,STOP-LAMP スイッチ	1	
2	23652-44001		UNIT,SENDING ユニット	1	
3	214A2-42331		CLIP クリップ	5	
4	239B2-42211		WIRE-HARNESS,ENGINE ワイヤハーネス	1	1-150
-	239B2-42212		WIRE-HARNESS,ENGINE ワイヤハーネス	1	151-
-	539B3-72021		WIRE-HARNESS,ENGINE ワイヤハーネス	1	[FC]
5	230C2-42201		DIODE,3A ダイオード	2	

FIG.40 BACK BUZZER

(F5H224A0) ﾊﾞｯｸﾌﾞｻﾞｰ

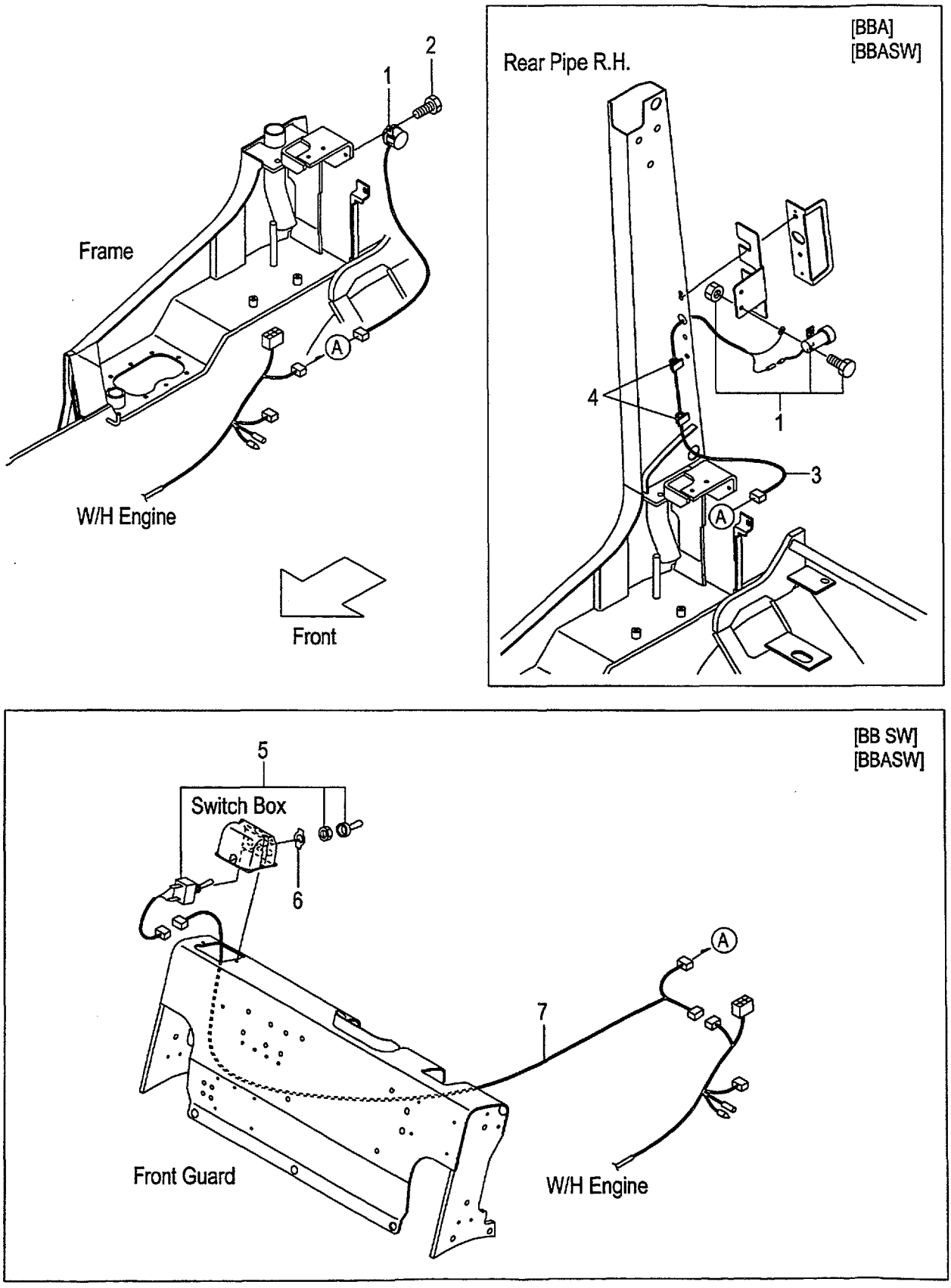

FIG.40
(F5H224A0)

A:FG20C6H FG20T6H FG25C6H FG25T6H FG20W6H FG25W6H
B:FD20C6H FD20T6H FD25C6H FD25T6H FD20W6H FD25W6H

Item No	Part No.	Mark	Description		Req'd	Remarks : Serial No.
1	234A2-42301		BUZZER,BACK,12V	ﾌﾞｻﾞｰ	1	
-	214A2-44001		BUZZER,BACK,12V	ﾌﾞｻﾞｰ	1	[BBA][BBASW]
2	01185-08016		BOLT	ﾎﾞﾙﾄ	1	(WITHOUT BBA,BBASW)
3	516G1-32012		WIRE,LEAD	ﾜｲﾔ	1	[BBA][BBASW]
4	27732-42311		CLAMP,HARNESS	ｸﾗﾝﾌﾟ	2	[BBA][BBASW]
5	57042-72091		SWITCH	ｽｲｯﾁ	1	[BB SW][BBASW]
6	27652-62211		PLATE,SWITCH	ﾌﾟﾚｰﾄ	1	[BB SW][BBASW]
7	516G1-32002		WIRE,LEAD	ﾜｲﾔ	1	[BB SW][BBASW]

FIG.41 LIGHT UNIT

(F5H22490) ライトユニット

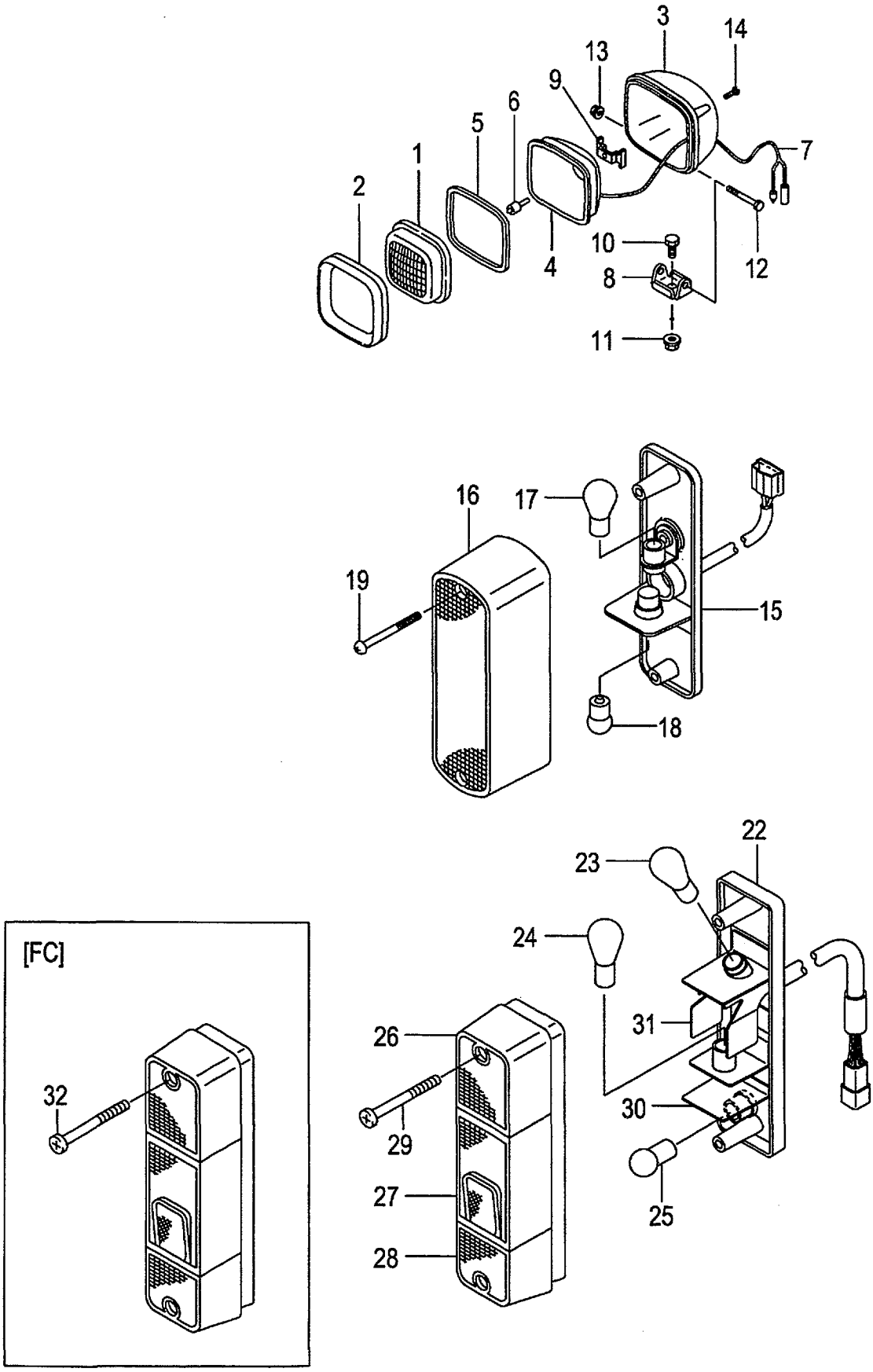

A:FG20C6H FG20T6H FG25C6H FG25T6H FG20W6H FG25W6H
B:FD20C6H FD20T6H FD25C6H FD25T6H FD20W6H FD25W6H

Item No	Part No.	Mark	Description		Req'd	Remarks : Serial No.
A1	216G2-40602		LAMP-ASSY,HEAD	ﾍｯﾄﾞﾗﾝﾌﾟｱｯｾﾝ	2	INC.1-14
1	216G2-43502		LENS	ﾚﾝｽﾞ	2	
2	216G2-43631		RIM	ﾘﾑ	2	
3	NO PART NO.	#	HOUSING	ﾊｳｼﾞﾝｸﾞ	2	
4	NO PART NO.	#	REFLECTOR	ﾘﾌﾚｸﾀ	2	
5	216G2-43531		GASKET	ｶﾞｽｹｯﾄ	2	
6	216G2-43542		BULB,12V/55W	ﾊﾞﾙﾌﾞ	2	
7	216G2-43551		WIRE,LEAD	ﾜｲﾔ	2	
8	216G2-43562		BRACKET	ﾌﾞﾗｹｯﾄ	2	
9	216G2-43571		SPRING	ｽﾌﾟﾘﾝｸﾞ	2	
10	216G2-43582		BOLT	ﾎﾞﾙﾄ	2	
11	216G2-43592		NUT	ﾅｯﾄ	2	
12	216G2-43602		BOLT	ﾎﾞﾙﾄ	2	
13	216G2-43611		NUT	ﾅｯﾄ	2	
14	216G2-43622		SCREW	ｽｸﾘｭ	8	
A2	216G2-40701		LAMP-ASSY,FRONT-COMBINATION	ﾌﾛﾝﾄｺﾝﾋﾞﾈｰｼｮﾝﾗﾝﾌﾟｱｯｾﾝ	2	INC.15-19
15	NO PART NO.	#	BODY	ﾎﾞﾃﾞｨ	2	
16	216G2-40731		LENS	ﾚﾝｽﾞ	2	
17	216G2-40711		BULB,12V/27W	ﾊﾞﾙﾌﾞ	2	
18	216G2-40721		BULB,12V/10W	ﾊﾞﾙﾌﾞ	2	
19	NO PART NO.		SCREW	ｽｸﾘｭ	4	
20	239A2-42221	+	WIRE-HARNESS,H.GUARD	ﾜｲﾔﾊｰﾈｽ	2	
-	534A9-22211	+	WIRE-HARNESS,H.GUARD	ﾜｲﾔﾊｰﾈｽ	2	[HL][BKH]
21	04913-11100	+	BAND	ﾊﾞﾝﾄﾞ	2	(WITHOUT HL,BKH)
A3	214A2-40203		LAMP-ASSY,REAR-COMBINATION	ﾘﾔｰｺﾝﾋﾞﾈｰｼｮﾝﾗﾝﾌﾟｱｯｾﾝ	2	INC.22-31
22	NO PART NO.	#	BODY	ﾎﾞﾃﾞｨ	2	
23	210F2-42011		BULB,12V/23W	ﾊﾞﾙﾌﾞ	2	
24	214A2-44501		BULB,12V/23,8W	ﾊﾞﾙﾌﾞ	2	(OLD PARTS)
-	210F2-42021		BULB,12V/23,8W	ﾊﾞﾙﾌﾞ	2	(NEW PARTS)
25	210F2-42031		BULB,12V/10W	ﾊﾞﾙﾌﾞ	2	
26	210F2-42201		LENS,PLASTIC	ﾚﾝｽﾞ	2	
27	210F2-42211		LENS,PLASTIC	ﾚﾝｽﾞ	2	
28	210F2-42221		LENS,PLASTIC	ﾚﾝｽﾞ	2	
29	01030-05065		SCREW	ｽｸﾘｭ	4	(WITHOUT FC)
30	210F2-42231		SHADE	ｼｪｰﾄﾞ	2	
31	214A2-44511		SHADE	ｼｪｰﾄﾞ	2	
32	514A3-72091		BOLT,PAN-HEAD	ﾎﾞﾙﾄ	4	[FC]

FIG.42 LICENSE LIGHT

(F5H224L0) ライセンスライト

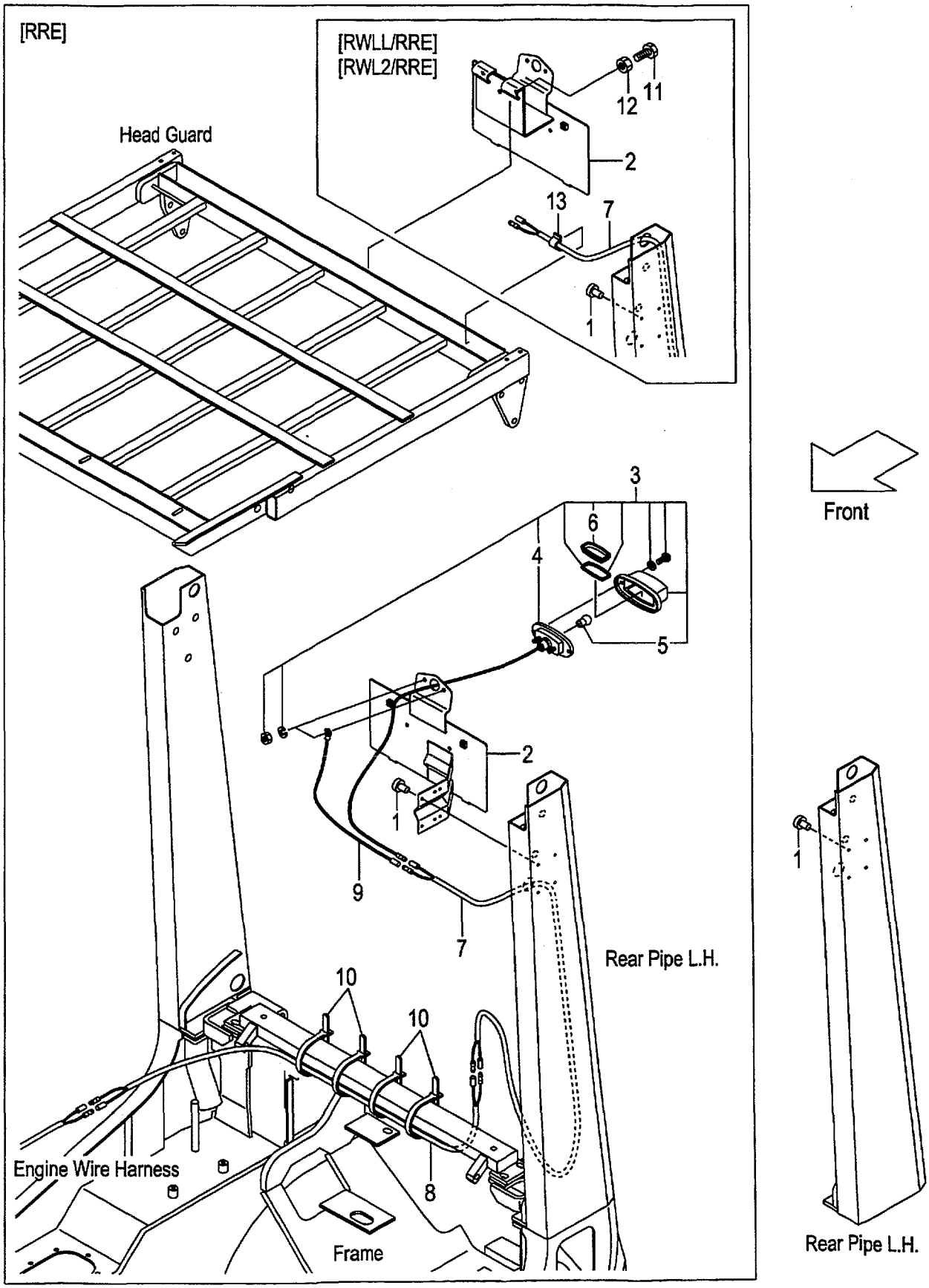

FIG.42
(F5H224L0)

A:FG20C6H FG20T6H FG25C6H FG25T6H FG20W6H FG25W6H:1-15074
B:FD20C6H FD20T6H FD25C6H FD25T6H FD20W6H FD25W6H:1-313

Item No	Part No.	Mark	Description		Req'd	Remarks : Serial No.
1	25596-42361		RIVET,NYLON	ﾘﾍﾞｯﾄ	4	
-	22256-42001		RIVET	ﾘﾍﾞｯﾄ	4	[RRE][RWLL/RRE][RWL2/RRE]
2	509P9-90101		BRACKET,NUMBER-PLATE	ﾌﾞﾗｹｯﾄ	1	[RRE]
-	533A0-52051		BRACKET,NUMBER-PLATE	ﾌﾞﾗｹｯﾄ	1	[RWLL/RRE][RWL2/RRE]
3	22132-40202		LAMP,LICENCE	ﾗﾝﾌﾟ	1	[RRE][RWLL/RRE][RWL2/RRE] INC.4-6
4	NO PART NO.	#	BODY	ﾎﾞﾃﾞｨ	1	[RRE][RWLL/RRE][RWL2/RRE]
5	22132-40041		BULB,12V/10W	ﾊﾞﾙﾌﾞ	1	[RRE][RWLL/RRE][RWL2/RRE]
6	22192-42411		LENS,PLASTIC	ﾚﾝｽﾞ	1	[RRE][RWLL/RRE][RWL2/RRE]
7	516G9-92101		WIRE-HARNESS,LICENCE	ﾜｲﾔﾊｰﾈｽ	1	[RRE]
-	534A9-92131		WIRE-HARNESS,LICENCE	ﾜｲﾔﾊｰﾈｽ	1	[RWLL/RRE][RWL2/RRE]
8	558A9-92001		WIRE-HARNESS,LICENCE	ﾜｲﾔﾊｰﾈｽ	1	[RRE][RWLL/RRE][RWL2/RRE]
9	222A2-42511		WIRE,LEAD	ﾜｲﾔ	1	[RRE][RWLL/RRE][RWL2/RRE]
10	04913-11120		BAND	ﾊﾞﾝﾄﾞ	4	[RRE][RWLL/RRE][RWL2/RRE]
11	01100-08020		BOLT	ﾎﾞﾙﾄ	3	[RWLL/RRE][RWL2/RRE]
12	01400-00008		NUT	ﾅｯﾄ	3	[RWLL/RRE][RWL2/RRE]
13	27732-42311		CLAMP,HARNESS	ｸﾗﾝﾌﾟ	1	[RWLL/RRE][RWL2/RRE]

FIG.42A LICENSE LIGHT

(F5H224L1) ライセンスライト

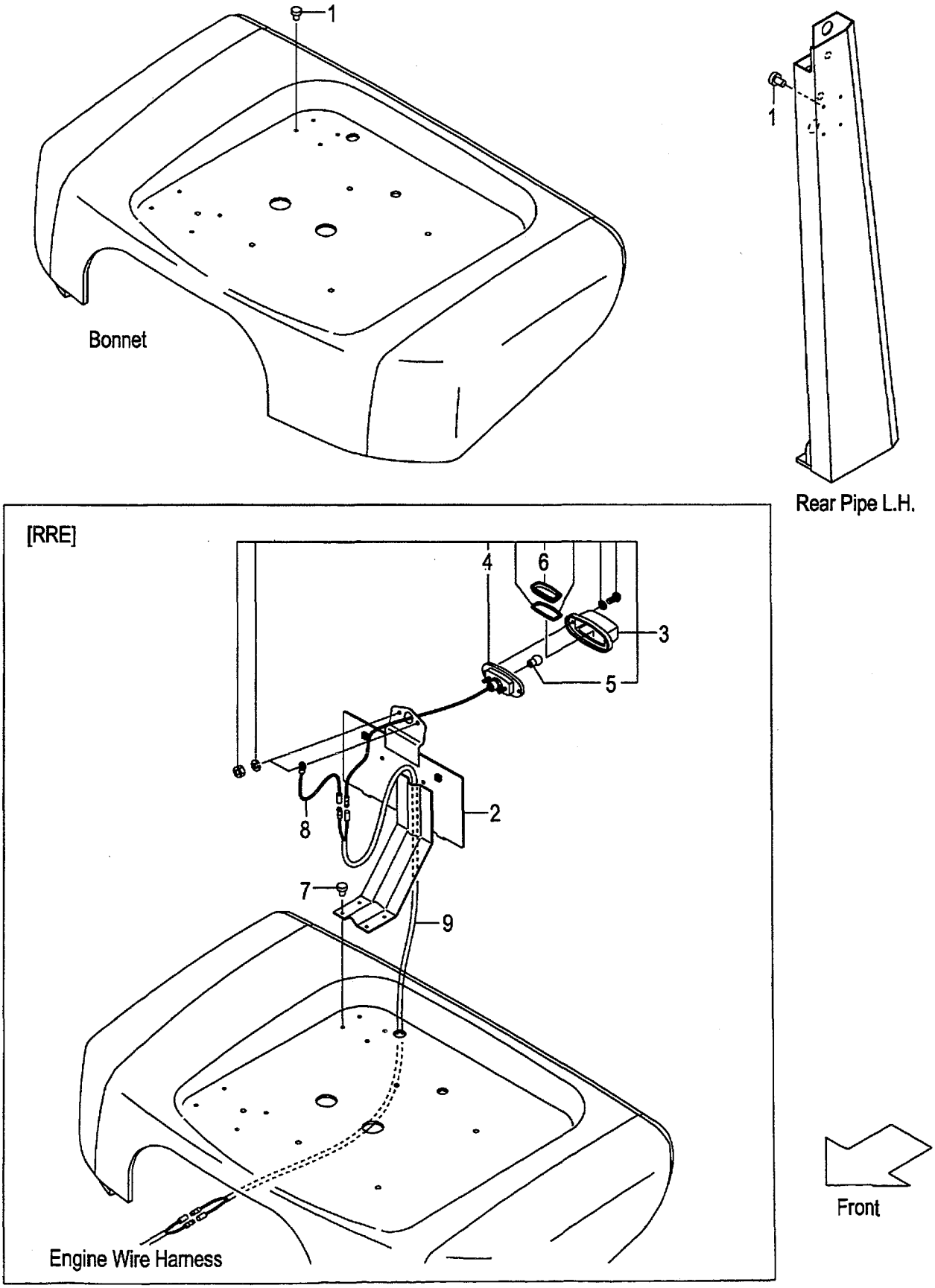

A:FG20C6H FG20T6H FG25C6H FG25T6H FG20W6H FG25W6H:15075-
B:FD20C6H FD20T6H FD25C6H FD25T6H FD20W6H FD25W6H:314-

Item No	Part No.	Mark	Description		Req'd	Remarks : Serial No.
1	25596-42361		RIVET,NYLON	ﾘﾍﾞｯﾄ	8	
-	25596-42361		RIVET,NYLON	ﾘﾍﾞｯﾄ	4	[RRE]
2	539A9-92101		BRACKET,NUMBER-PLATE	ﾌﾞﾗｹｯﾄ	1	[RRE]
3	22132-40202		LAMP,LICENCE	ﾗﾝﾌﾟ	1	[RRE] INC.4-6
4	NO PART NO.	#	BODY	ﾎﾞﾃﾞｨ	1	[RRE]
5	22132-40041		BULB,12V/10W	ﾊﾞﾙﾌﾞ	1	[RRE]
6	22192-42411		LENS,PLASTIC	ﾚﾝｽﾞ	1	[RRE]
7	22256-42001		RIVET	ﾘﾍﾞｯﾄ	4	[RRE]
8	222A2-42511		WIRE,LEAD	ﾜｲﾔ	1	[RRE]
9	558A9-92001		WIRE-HARNESS,LICENCE	ﾜｲﾔﾊｰﾈｽ	1	[RRE]

FIG.43 LICENSE LIGHT [SCB001/RRE]

(F5H224M0) ライセンスライト

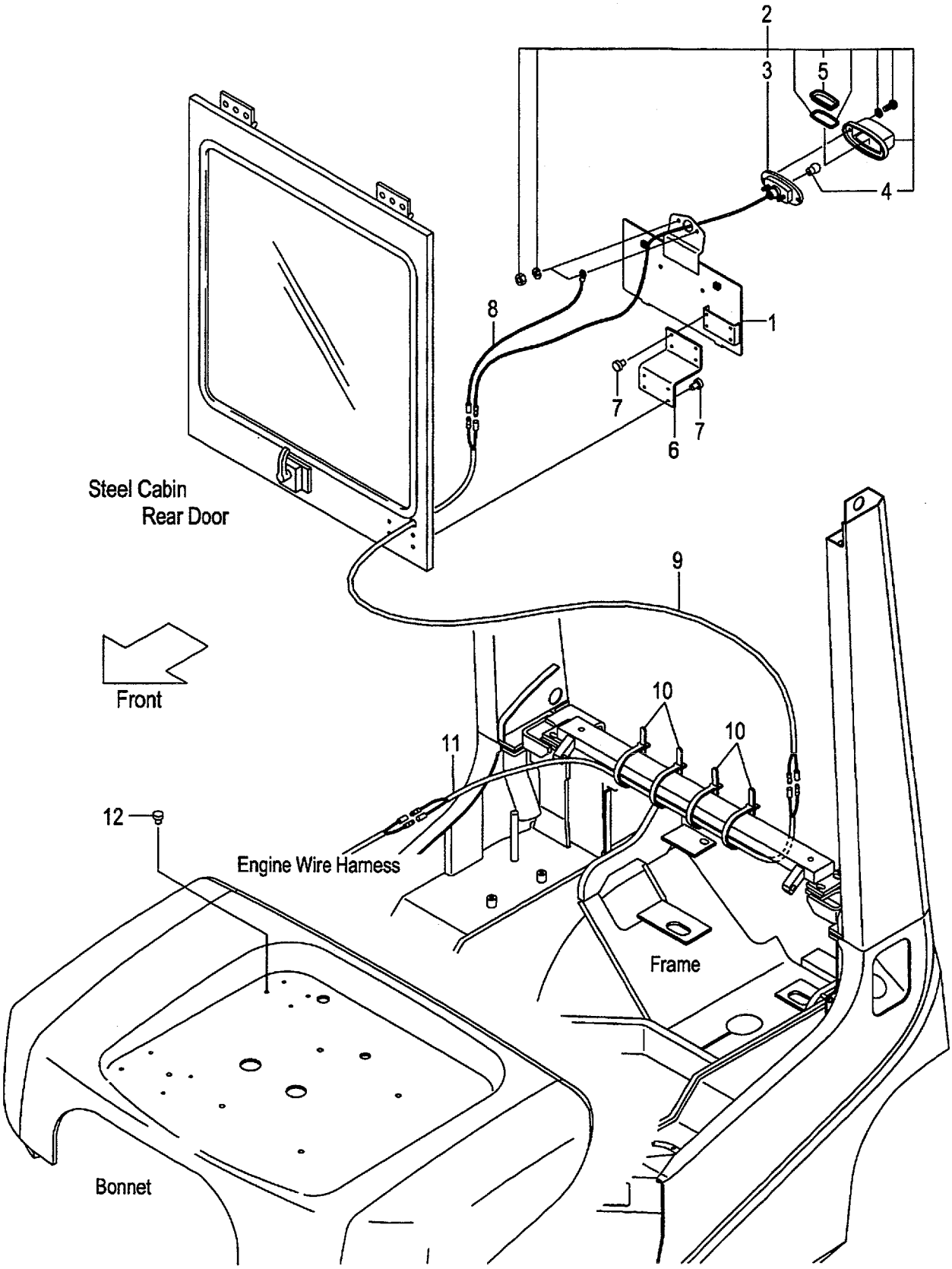

FIG.43
(F5H224M0)

A:FG20C6H FG20T6H FG25C6H FG25T6H FG20W6H FG25W6H
B:FD20C6H FD20T6H FD25C6H FD25T6H FD20W6H FD25W6H

Item No	Part No.	Mark	Description		Req'd	Remarks : Serial No.
1	531A0-52521		BRACKET,NUMBER-PLATE	ﾌﾞﾗｹｯﾄ	1	[SCB001/RRE]
2	22132-40202		LAMP,LICENCE	ﾗﾝﾌﾟ	1	[SCB001/RRE] INC.3-5
3	NO PART NO.	#	BODY	ﾎﾞﾃﾞｨ	1	[SCB001/RRE]
4	22132-40041		BULB,12V/10W	ﾊﾞﾙﾌﾞ	1	[SCB001/RRE]
5	22192-42411		LENS,PLASTIC	ﾚﾝｽﾞ	1	[SCB001/RRE]
6	539A5-32361		BRACKET	ﾌﾞﾗｹｯﾄ	1	[SCB001/RRE]
7	22256-42001		RIVET	ﾘﾍﾞｯﾄ	8	[SCB001/RRE]
8	222A2-42511		WIRE,LEAD	ﾜｲﾔ	1	[SCB001/RRE]
9	534A9-92131		WIRE-HARNESS,LICENCE	ﾜｲﾔﾊｰﾈｽ	1	[SCB001/RRE]
10	04913-11120		BAND	ﾊﾞﾝﾄﾞ	4	[SCB001/RRE]
11	558A9-92001		WIRE-HARNESS,LICENCE	ﾜｲﾔﾊｰﾈｽ	1	[SCB001/RRE]
12	25596-42361		RIVET,NYLON	ﾘﾍﾞｯﾄ	4	[SCB001/RRE]

FIG.44 LICENSE LIGHT [RRE/RW]

(F5H224N0) ライセンスライト

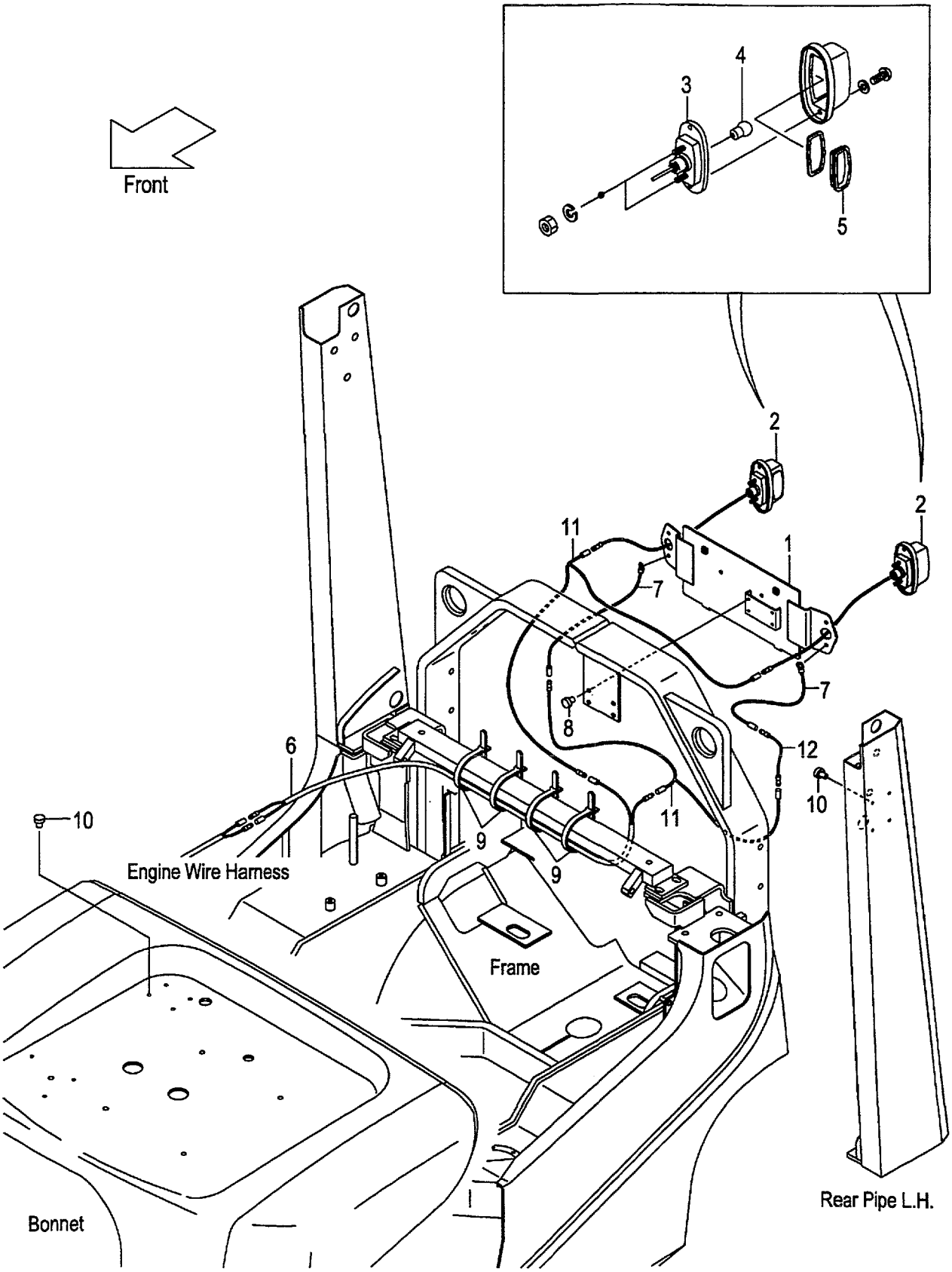

A:FG25C6H FG25T6H FG25W6H
B:FD25C6H FD25T6H FD25W6H

FIG.44
(F5H224N0)

Item No	Part No.	Mark	Description		Req'd	Remarks : Serial No.
1	539C1-90151		BRACKET,NUMBER-PLATE	ﾌﾞﾗｹｯﾄ	1	[RRE/RW]
2	22132-40202		LAMP,LICENCE	ﾗﾝﾌﾟ	2	[RRE/RW] INC.3-5
3	NO PART NO.	#	BODY	ﾎﾞﾃﾞｨ	2	[RRE/RW]
4	22132-40041		BULB,12V/10W	ﾊﾞﾙﾌﾞ	2	[RRE/RW]
5	22192-42411		LENS,PLASTIC	ﾚﾝｽﾞ	2	[RRE/RW]
6	NO PART NO.		WIRE-HARNESS,LICENCE	ﾜｲﾔﾊｰﾈｽ	1	[RRE/RW]
7	222A2-42511		WIRE,LEAD	ﾜｲﾔ	2	[RRE/RW]
8	22256-42001		RIVET	ﾘﾍﾞｯﾄ	4	[RRE/RW]
9	04913-11120		BAND	ﾊﾞﾝﾄﾞ	4	[RRE/RW]
10	25596-42361		RIVET,NYLON	ﾘﾍﾞｯﾄ	8	[RRE/RW]

FIG.45 LICENSE LIGHT [TUE/RRE][RRE/(LPG,LPO,CNG)]

(F5H224P0) ライセンスライト

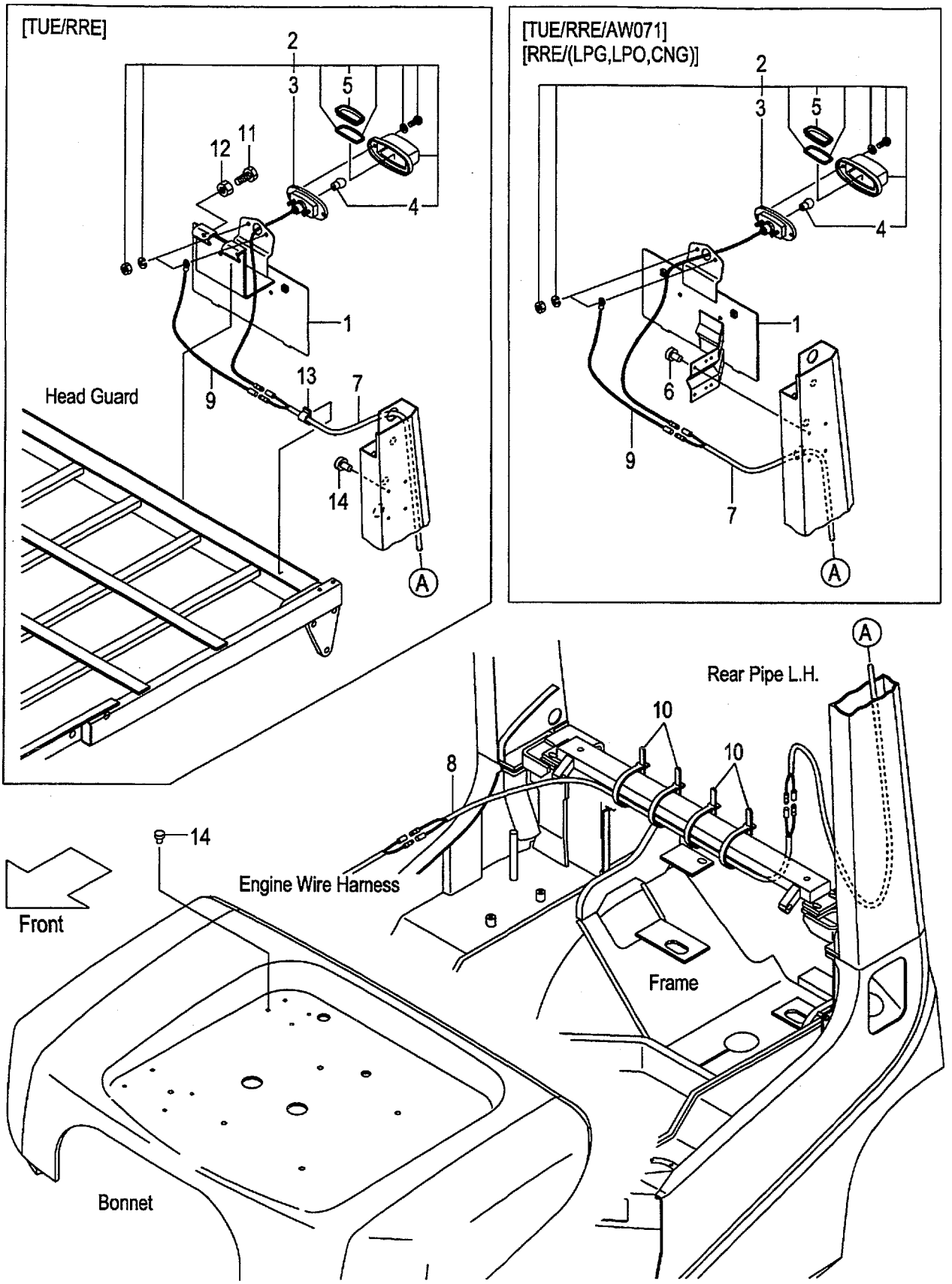

A:FG20C6H FG20T6H FG20W6H C:FD20C6H FD20T6H FD20W6H
B:FG25C6H FG25T6H FG25W6H D:FD25C6H FD25T6H FD25W6H

Item No	Part No.	Mark	Description		Req'd	Remarks : Serial No.
1	533A0-52051		BRACKET,NUMBER-PLATE	ﾌﾞﾗｹｯﾄ	1	A,B:15075- C,D:314- [TUE/RRE]
-	509P9-90101		BRACKET,NUMBER-PLATE	ﾌﾞﾗｹｯﾄ	1	A,B:15075- C,D:314- [TUE/RRE/AW071]
-	509P9-90101		BRACKET,NUMBER-PLATE	ﾌﾞﾗｹｯﾄ	1	A,B:15075- [RRE/LPG][RRE/LPO]
-	509P9-90101		BRACKET,NUMBER-PLATE	ﾌﾞﾗｹｯﾄ	1	B [RRE/CNG]
2	22132-40202		LAMP,LICENCE	ﾗﾝﾌﾟ	1	A,B:15075- C,D:314- [TUE/RRE] INC.3-5
-	22132-40202		LAMP,LICENCE	ﾗﾝﾌﾟ	1	A,B:15075- [RRE/LPG][RRE/LPO] INC.3-5
-	22132-40202		LAMP,LICENCE	ﾗﾝﾌﾟ	1	B [RRE/CNG] INC.3-5
3	NO PART NO.	#	BODY	ﾎﾞﾃﾞｨ	1	A,B:15075- C,D:314- [TUE/RRE]
-	NO PART NO.	#	BODY	ﾎﾞﾃﾞｨ	1	A,B:15075- [RRE/LPG][RRE/LPO]
-	NO PART NO.	#	BODY	ﾎﾞﾃﾞｨ	1	B [RRE/CNG]
4	22132-40041		BULB,12V/10W	ﾊﾞﾙﾌﾞ	1	A,B:15075- C,D:314- [TUE/RRE]
-	22132-40041		BULB,12V/10W	ﾊﾞﾙﾌﾞ	1	A,B:15075- [RRE/LPG][RRE/LPO]
-	22132-40041		BULB,12V/10W	ﾊﾞﾙﾌﾞ	1	B [RRE/CNG]
5	22192-42411		LENS,PLASTIC	ﾚﾝｽﾞ	1	A,B:15075- C,D:314- [TUE/RRE]
-	22192-42411		LENS,PLASTIC	ﾚﾝｽﾞ	1	A,B:15075- [RRE/LPG][RRE/LPO]
-	22192-42411		LENS,PLASTIC	ﾚﾝｽﾞ	1	B [RRE/CNG]
6	22256-42001		RIVET	ﾘﾍﾞｯﾄ	4	A,B:15075- C,D:314- [TUE/RRE/AW071]
-	22256-42001		RIVET	ﾘﾍﾞｯﾄ	4	A,B:15075- [RRE/LPG][RRE/LPO]
-	22256-42001		RIVET	ﾘﾍﾞｯﾄ	4	B [RRE/CNG]
7	534A9-92131		WIRE-HARNESS,LICENCE	ﾜｲﾔﾊｰﾈｽ	1	A,B:15075- C,D:314- [TUE/RRE]

FIG.45 LICENSE LIGHT [TUE/RRE][RRE/(LPG,LPO,CNG)]

(F5H224P0) ライセンスライト

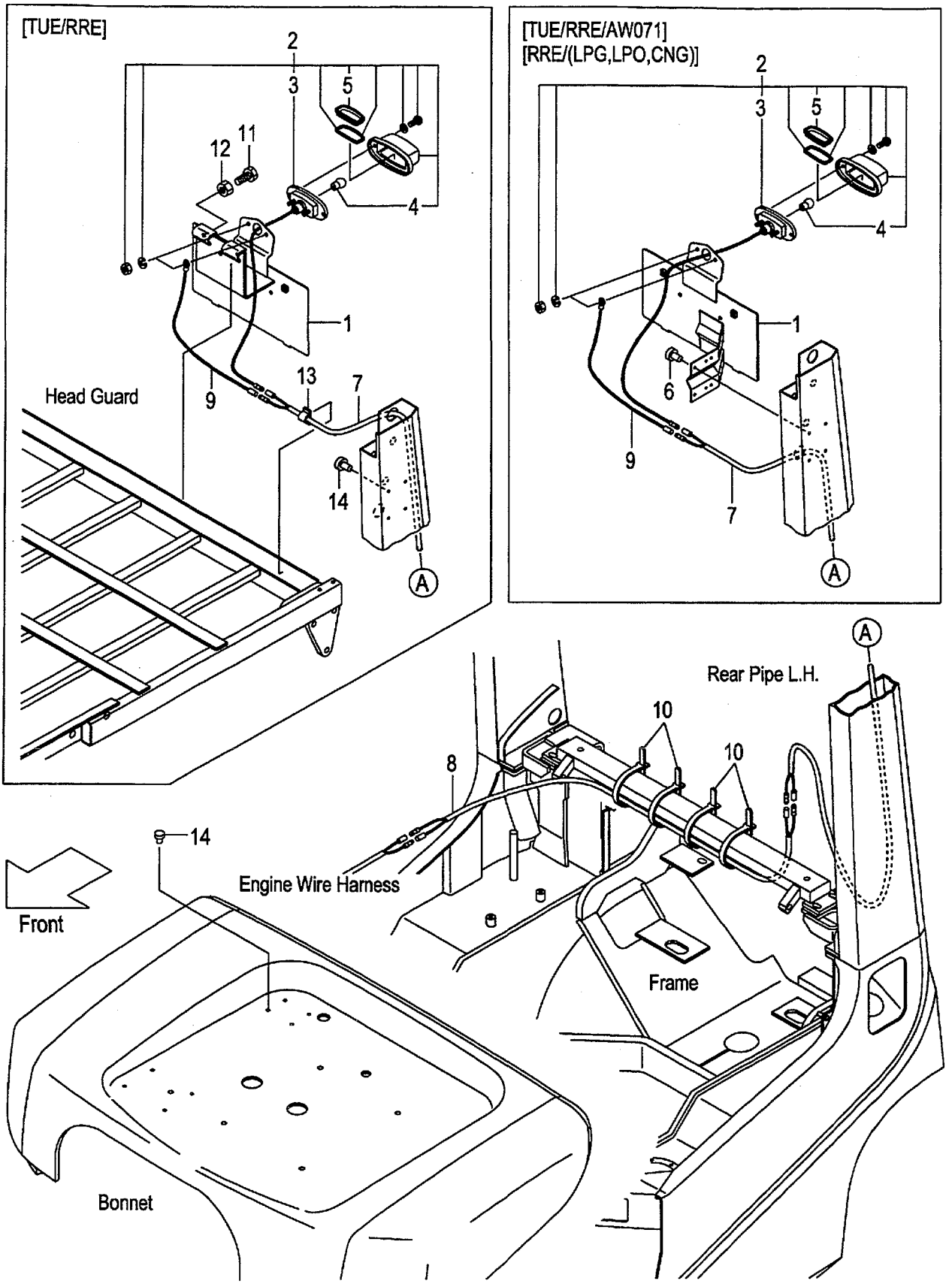

A:FG20C6H FG20T6H FG20W6H C:FD20C6H FD20T6H FD20W6H
B:FG25C6H FG25T6H FG25W6H D:FD25C6H FD25T6H FD25W6H

Item No	Part No.	Mark	Description		Req'd	Remarks : Serial No.
-	516G9-92101		WIRE-HARNESS,LICENCE	ﾜｲﾔﾊｰﾈｽ	1	A,B:15075- C,D:314- [TUE/RRE/AW071]
-	516G9-92101		WIRE-HARNESS,LICENCE	ﾜｲﾔﾊｰﾈｽ	1	A,B:15075- [RRE/LPG][RRE/LPO]
-	516G9-92101		WIRE-HARNESS,LICENCE	ﾜｲﾔﾊｰﾈｽ	1	B [RRE/CNG]
8	558A9-92001		WIRE-HARNESS,LICENCE	ﾜｲﾔﾊｰﾈｽ	1	A,B:15075- C,D:314- [TUE/RRE]
-	558A9-92001		WIRE-HARNESS,LICENCE	ﾜｲﾔﾊｰﾈｽ	1	A,B:15075- [RRE/LPG][RRE/LPO]
-	558A9-92001		WIRE-HARNESS,LICENCE	ﾜｲﾔﾊｰﾈｽ	1	B [RRE/CNG]
9	222A2-42511		WIRE,LEAD	ﾜｲﾔ	1	A,B:15075- C,D:314- [TUE/RRE]
-	222A2-42511		WIRE,LEAD	ﾜｲﾔ	1	A,B:15075- [RRE/LPG][RRE/LPO]
-	222A2-42511		WIRE,LEAD	ﾜｲﾔ	1	B [RRE/CNG]
10	04913-11120		BAND	ﾊﾞﾝﾄﾞ	4	A,B:15075- C,D:314- [TUE/RRE]
-	04913-11120		BAND	ﾊﾞﾝﾄﾞ	4	A,B:15075- [RRE/LPG][RRE/LPO]
-	04913-11120		BAND	ﾊﾞﾝﾄﾞ	4	B [RRE/CNG]
11	01100-08020		BOLT	ﾎﾞﾙﾄ	3	A,B:15075- C,D:314- [TUE/RRE]
12	01400-00008		NUT	ﾅｯﾄ	3	A,B:15075- C,D:314- [TUE/RRE]
13	27732-42311		CLAMP,HARNESS	ｸﾗﾝﾌﾟ	1	A,B:15075- C,D:314- [TUE/RRE]
14	25596-42361		RIVET,NYLON	ﾘﾍﾞｯﾄ	8	A,B:15075- C,D:314- [TUE/RRE]
-	25596-42361		RIVET,NYLON	ﾘﾍﾞｯﾄ	4	A,B:15075- C,D:314- [TUE/RRE/AW071]
-	25596-42361		RIVET,NYLON	ﾘﾍﾞｯﾄ	4	A,B:15075- [RRE/LPG][RRE/LPO]
-	25596-42361		RIVET,NYLON	ﾘﾍﾞｯﾄ	4	B [RRE/CNG]

FIG.46 REAR WORKING LIGHT [RWLR]

(F5H224Q0) リヤーワーキング゛ライト

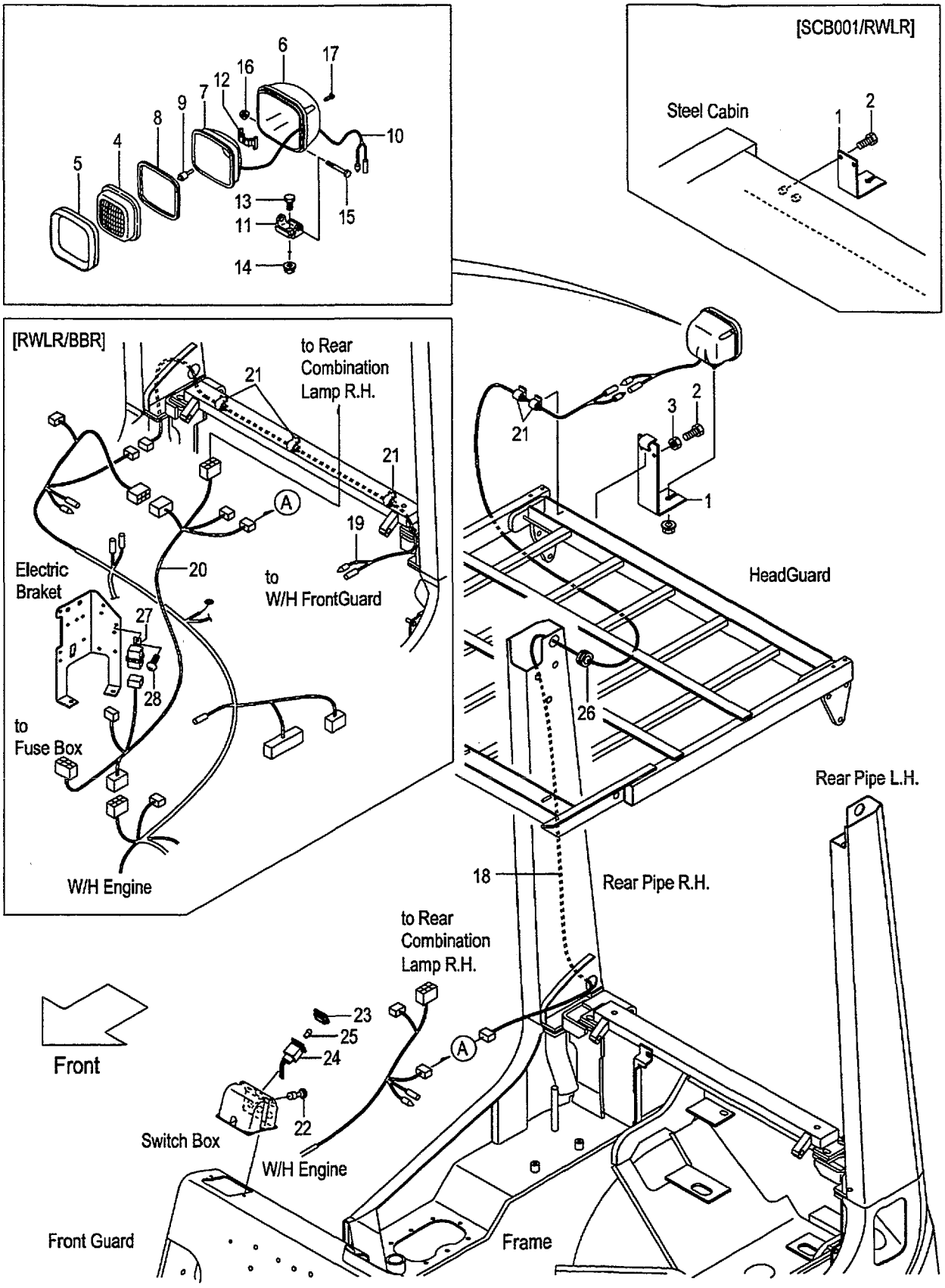

A:FG20C6H FG20T6H FG25C6H FG25T6H FG20W6H FG25W6H
B:FD20C6H FD20T6H FD25C6H FD25T6H FD20W6H FD25W6H

Item No	Part No.	Mark	Description		Req'd	Remarks : Serial No.
1	516G1-42151		BRACKET,REAR-LAMP	ﾌﾞﾗｹｯﾄ	1	[RWLR]
-	539A1-42201		BRACKET,REAR-LAMP	ﾌﾞﾗｹｯﾄ	1	[RWLR/AW061]
-	530C1-42001		BRACKET,REAR-LAMP	ﾌﾞﾗｹｯﾄ	1	[SCB001/RWLR]
2	01100-08020		BOLT	ﾎﾞﾙﾄ	3	[RWLR]
-	01185-08020		BOLT	ﾎﾞﾙﾄ	2	[SCB001/RWLR]
3	01400-00008		NUT	ﾅｯﾄ	3	[RWLR](WITHOUT SCB001/RWLR)
A1	216G2-40602		LAMP-ASSY,HEAD	ﾍｯﾄﾞﾗﾝﾌﾟｱｯｾﾝ	1	[RWLR] INC.4-17
4	216G2-43502		LENS	ﾚﾝｽﾞ	1	[RWLR]
5	216G2-43631		RIM	ﾘﾑ	1	[RWLR]
6	NO PART NO.	#	HOUSING	ﾊｳｼﾞﾝｸﾞ	1	[RWLR]
7	NO PART NO.	#	REFLECTOR	ﾘﾌﾚｸﾀ	1	[RWLR]
8	216G2-43531		GASKET	ｶﾞｽｹｯﾄ	1	[RWLR]
9	216G2-43542		BULB,12V/55W	ﾊﾞﾙﾌﾞ	1	[RWLR]
10	216G2-43551		WIRE,LEAD	ﾜｲﾔ	1	[RWLR]
11	216G2-43562		BRACKET	ﾌﾞﾗｹｯﾄ	1	[RWLR]
12	216G2-43571		SPRING	ｽﾌﾟﾘﾝｸﾞ	1	[RWLR]
13	216G2-43582		BOLT	ﾎﾞﾙﾄ	1	[RWLR]
14	216G2-43592		NUT	ﾅｯﾄ	1	[RWLR]
15	216G2-43602		BOLT	ﾎﾞﾙﾄ	1	[RWLR]
16	216G2-43611		NUT	ﾅｯﾄ	1	[RWLR]
17	216G2-43622		SCREW	ｽｸﾘｭ	4	[RWLR]
18	516G1-42101		WIRE,LEAD	ﾜｲﾔ	1	[RWLR]
19	516G1-42111		WIRE,LEAD	ﾜｲﾔ	1	[RWLR/RWL]
20	539A8-92111		WIRE,LEAD	ﾜｲﾔ	1	[RWLR/RWL]
21	27732-42311		CLAMP,HARNESS	ｸﾗﾝﾌﾟ	2	[RWLR]
-	27732-42311		CLAMP,HARNESS	ｸﾗﾝﾌﾟ	5	[RWLR/RWL]
22	22672-42501		SWITCH,LAMP	ｽｲｯﾁ	1	[RWLR]
A2	522A1-42051		LAMP-ASSY,PILOT	ﾊﾟｲﾛｯﾄﾗﾝﾌﾟｱｯｾﾝ	1	[RWLR] INC.23-25
23	522A1-42061		LENS	ﾚﾝｽﾞ	1	[RWLR]
24	NO PART NO.	#	HOLDER	ﾎﾙﾀﾞ	1	[RWLR]
25	23302-42311		BULB,12V/3.4W	ﾊﾞﾙﾌﾞ	1	[RWLR]
26	22679-47301		GROMMET	ｸﾞﾛﾒｯﾄ	1	[RWLR]
27	26062-42881		RELAY,12V	ﾘﾚｰ	1	[RWLR/RWL]
28	214A2-42611		SCREW	ｽｸﾘｭ	1	[RWLR/RWL]

FIG.47 REAR WORKING LIGHT [RWLL]

(F5H224R0) リヤーワーキング゛ライト

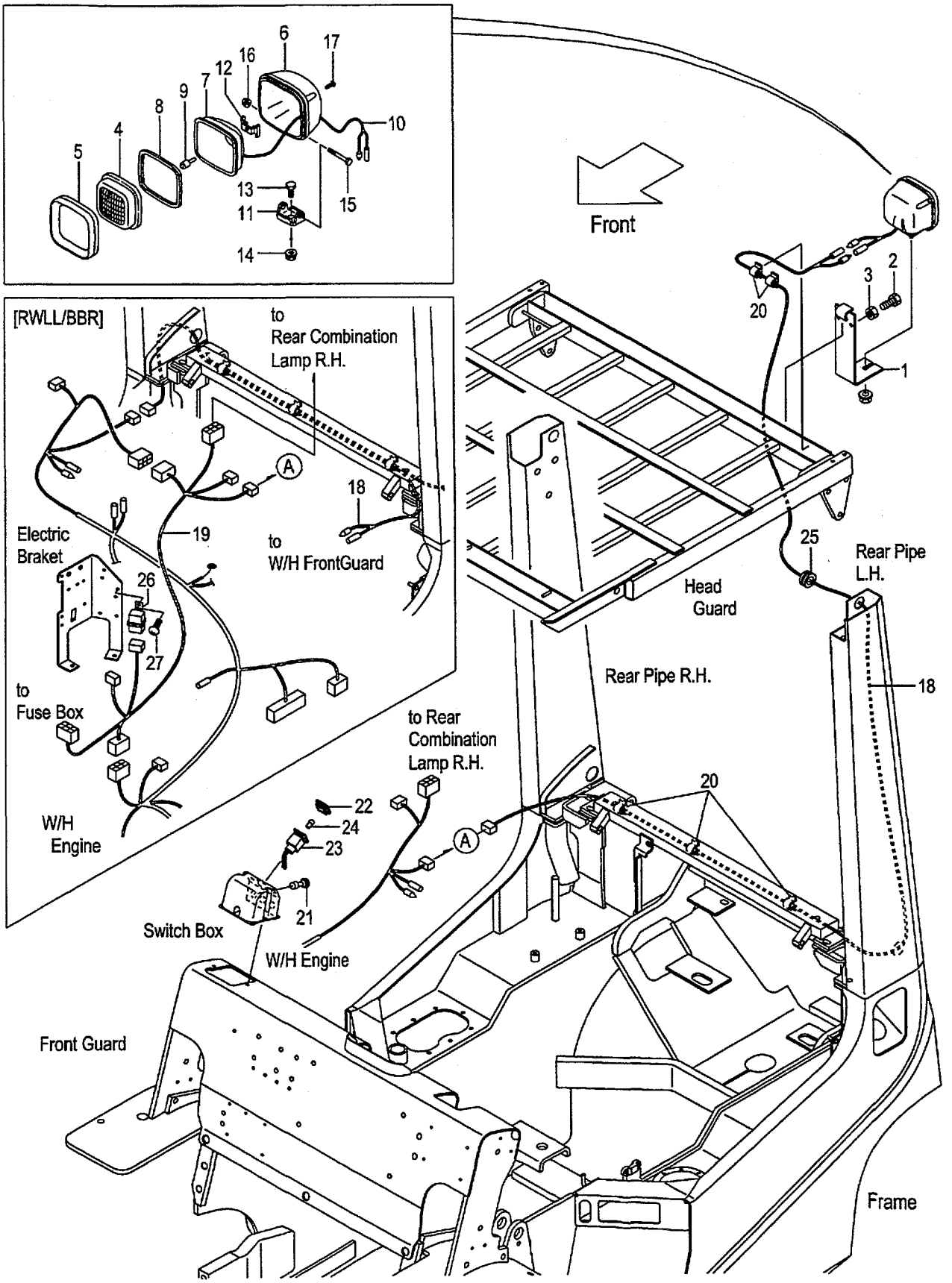

FIG.47
(F5H224R0)

A:FG20C6H FG20T6H FG25C6H FG25T6H FG20W6H FG25W6H
B:FD20C6H FD20T6H FD25C6H FD25T6H FD20W6H FD25W6H

Item No	Part No.	Mark	Description		Req'd	Remarks : Serial No.
1	516G1-42151		BRACKET,REAR-LAMP	ﾌﾞﾗｹｯﾄ	1	[RWLL]
-	539A1-42201		BRACKET,REAR-LAMP	ﾌﾞﾗｹｯﾄ	1	[RWLL/AW061]
2	01100-08020		BOLT	ﾎﾞﾙﾄ	3	[RWLL]
3	01400-00008		NUT	ﾅｯﾄ	3	[RWLL]
A1	216G2-40602		LAMP-ASSY,HEAD	ﾍｯﾄﾞﾗﾝﾌﾟｱｯｾﾝ	1	[RWLL] INC.4-17
4	216G2-43502		LENS	ﾚﾝｽﾞ	1	[RWLL]
5	216G2-43631		RIM	ﾘﾑ	1	[RWLL]
6	NO PART NO.	#	HOUSING	ﾊｳｼﾞﾝｸﾞ	1	[RWLL]
7	NO PART NO.	#	REFLECTOR	ﾘﾌﾚｸﾀ	1	[RWLL]
8	216G2-43531		GASKET	ｶﾞｽｹｯﾄ	1	[RWLL]
9	216G2-43542		BULB,12V/55W	ﾊﾞﾙﾌﾞ	1	[RWLL]
10	216G2-43551		WIRE,LEAD	ﾜｲﾔ	1	[RWLL]
11	216G2-43562		BRACKET	ﾌﾞﾗｹｯﾄ	1	[RWLL]
12	216G2-43571		SPRING	ｽﾌﾟﾘﾝｸﾞ	1	[RWLL]
13	216G2-43582		BOLT	ﾎﾞﾙﾄ	1	[RWLL]
14	216G2-43592		NUT	ﾅｯﾄ	1	[RWLL]
15	216G2-43602		BOLT	ﾎﾞﾙﾄ	1	[RWLL]
16	216G2-43611		NUT	ﾅｯﾄ	1	[RWLL]
17	216G2-43622		SCREW	ｽｸﾘｭ	4	[RWLL]
18	516G1-42111		WIRE,LEAD	ﾜｲﾔ	1	[RWLL]
-	516G1-42111		WIRE,LEAD	ﾜｲﾔ	2	[RWLL/RWL]
19	539A8-92111		WIRE,LEAD	ﾜｲﾔ	1	[RWLL/RWL]
20	27732-42311		CLAMP,HARNESS	ｸﾗﾝﾌﾟ	5	[RWLL]
21	22672-42501		SWITCH,LAMP	ｽｲｯﾁ	1	[RWLL]
A2	522A1-42051		LAMP-ASSY,PILOT	ﾊﾟｲﾛｯﾄﾗﾝﾌﾟｱｯｾﾝ	1	[RWLL] INC.22-24
22	522A1-42061		LENS	ﾚﾝｽﾞ	1	[RWLL]
23	NO PART NO.	#	HOLDER	ﾎﾙﾀﾞ	1	[RWLL]
24	23302-42311		BULB,12V/3.4W	ﾊﾞﾙﾌﾞ	1	[RWLL]
25	22679-47301		GROMMET	ｸﾞﾛﾒｯﾄ	1	[RWLL]
26	26062-42881		RELAY,12V	ﾘﾚｰ	1	[RWLL/RWL]
27	214A2-42611		SCREW	ｽｸﾘｭ	1	[RWLL/RWL]

FIG.48 REAR WORKING LIGHT [RWL2]

(F5H224S0) リヤーワーキング゛ライト

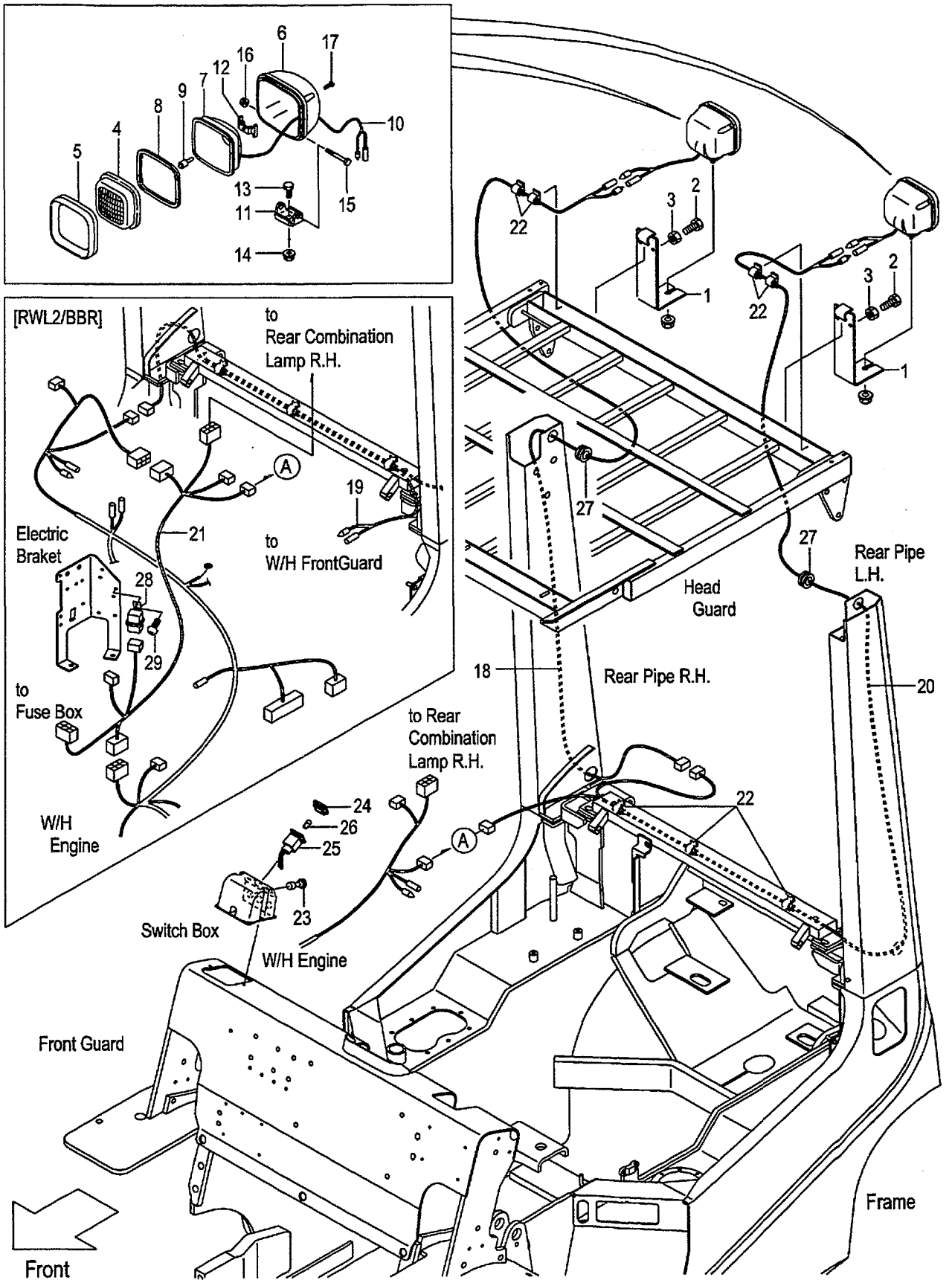

FIG.48
(F5H224S0)

A:FG20C6H FG20T6H FG25C6H FG25T6H FG20W6H FG25W6H
B:FD20C6H FD20T6H FD25C6H FD25T6H FD20W6H FD25W6H

Item No	Part No.	Mark	Description		Req'd	Remarks : Serial No.
1	516G1-42151		BRACKET,REAR-LAMP	ﾌﾞﾗｹｯﾄ	2	[RWL2]
-	539A1-42201		BRACKET,REAR-LAMP	ﾌﾞﾗｹｯﾄ	2	[RWL2/AW061]
2	01100-08020		BOLT	ﾎﾞﾙﾄ	6	[RWL2]
3	01400-00008		NUT	ﾅｯﾄ	6	[RWL2]
A1	216G2-40602		LAMP-ASSY,HEAD	ﾍｯﾄﾞﾗﾝﾌﾟｱｯｾﾝ	2	[RWL2] INC.4-17
4	216G2-43502		LENS	ﾚﾝｽﾞ	2	[RWL2]
5	216G2-43631		RIM	ﾘﾑ	2	[RWL2]
6	NO PART NO.	#	HOUSING	ﾊｳｼﾞﾝｸﾞ	2	[RWL2]
7	NO PART NO.	#	REFLECTOR	ﾘﾌﾚｸﾀ	2	[RWL2]
8	216G2-43531		GASKET	ｶﾞｽｹｯﾄ	2	[RWL2]
9	216G2-43542		BULB,12V/55W	ﾊﾞﾙﾌﾞ	2	[RWL2]
10	216G2-43551		WIRE,LEAD	ﾜｲﾔ	2	[RWL2]
11	216G2-43562		BRACKET	ﾌﾞﾗｹｯﾄ	2	[RWL2]
12	216G2-43571		SPRING	ｽﾌﾟﾘﾝｸﾞ	2	[RWL2]
13	216G2-43582		BOLT	ﾎﾞﾙﾄ	2	[RWL2]
14	216G2-43592		NUT	ﾅｯﾄ	2	[RWL2]
15	216G2-43602		BOLT	ﾎﾞﾙﾄ	2	[RWL2]
16	216G2-43611		NUT	ﾅｯﾄ	2	[RWL2]
17	216G2-43622		SCREW	ｽｸﾘｭ	8	[RWL2]
18	516G1-42101		WIRE,LEAD	ﾜｲﾔ	1	[RWL2]
19	516G1-42111		WIRE,LEAD	ﾜｲﾔ	1	[RWL2/RWL]
20	516G1-42121		WIRE,LEAD	ﾜｲﾔ	1	[RWL2]
21	539A8-92111		WIRE,LEAD	ﾜｲﾔ	1	[RWL2/RWL]
22	27732-42311		CLAMP,HARNESS	ｸﾗﾝﾌﾟ	7	[RWL2]
23	22672-42501		SWITCH,LAMP	ｽｲｯﾁ	1	[RWL2]
A2	522A1-42051		LAMP-ASSY,PILOT	ﾊﾟｲﾛｯﾄﾗﾝﾌﾟｱｯｾﾝ	1	[RWL2] INC.24-26
24	522A1-42061		LENS	ﾚﾝｽﾞ	1	[RWL2]
25	NO PART NO.	#	HOLDER	ﾎﾙﾀﾞ	1	[RWL2]
26	23302-42311		BULB,12V/3.4W	ﾊﾞﾙﾌﾞ	1	[RWL2]
27	22679-47301		GROMMET	ｸﾞﾛﾒｯﾄ	2	[RWL2]
28	26062-42881		RELAY,12V	ﾘﾚｰ	1	[RWL2/RWL]
29	214A2-42611		SCREW	ｽｸﾘｭ	1	[RWL2/RWL]

FIG.49 REVOLVING LIGHT [RLY][RLR]

(F5H224T0) ﾘﾎﾞﾙﾋﾞﾝｸﾞﾗｲﾄ

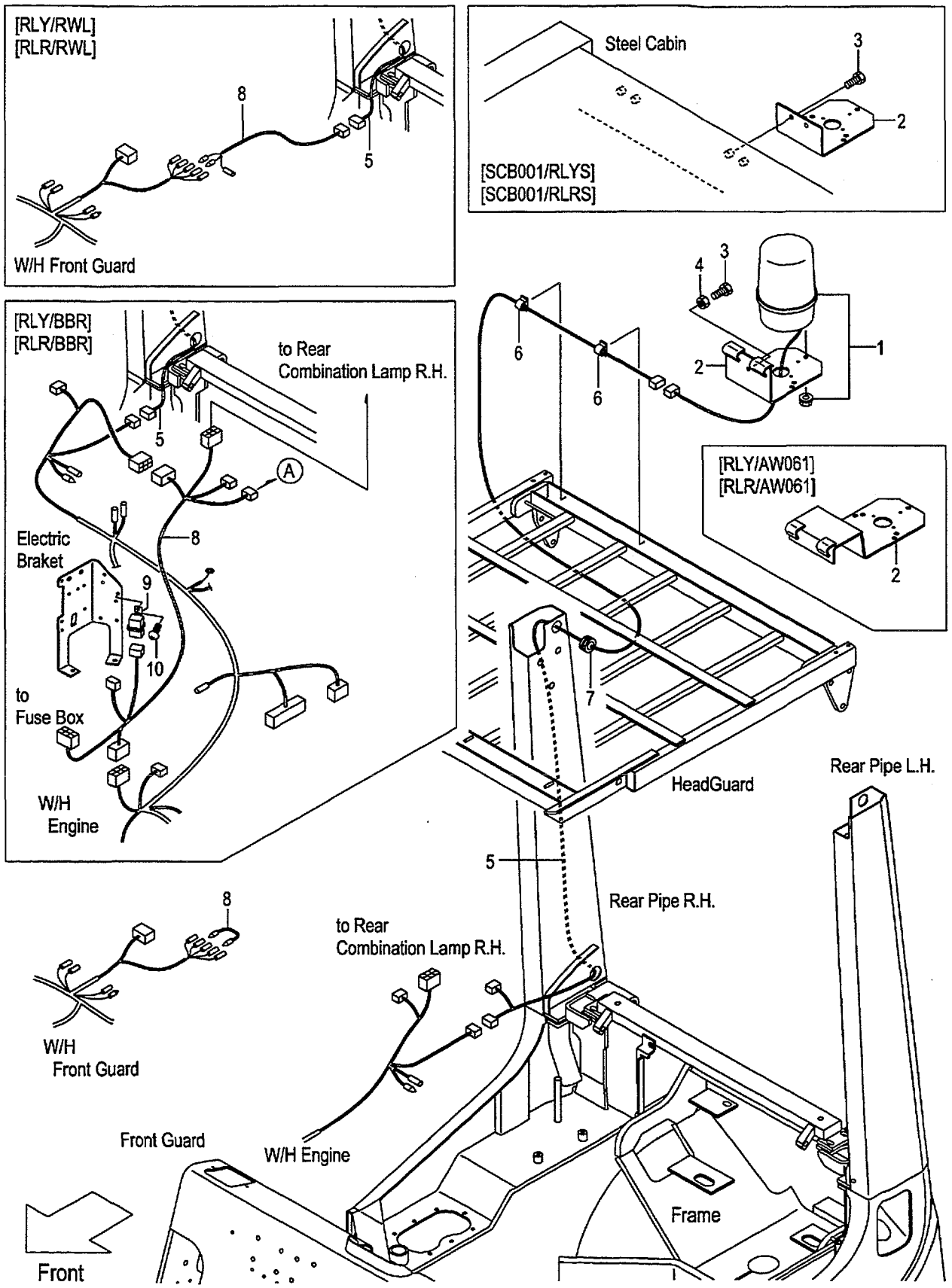

A:FG20C6H FG20T6H FG25C6H FG25T6H FG20W6H FG25W6H
B:FD20C6H FD20T6H FD25C6H FD25T6H FD20W6H FD25W6H

Item No	Part No.	Mark	Description		Req'd	Remarks : Serial No.
1	514A1-41001		LIGHT,REVOLVING	ﾗｲﾄ	1	[RLYS]
-	514A1-41011		LIGHT,REVOLVING	ﾗｲﾄ	1	[RLRS]
-	514A1-41021		LIGHT,REVOLVING	ﾗｲﾄ	1	[RLYM]
-	514A1-41031		LIGHT,REVOLVING	ﾗｲﾄ	1	[RLRM]
2	529F1-42251		BRACKET,REVOLVING	ﾌﾞﾗｹｯﾄ	1	[RLY][RLR]
-	529F1-42201		BRACKET,REVOLVING	ﾌﾞﾗｹｯﾄ	1	[RLY/BKTL][RLR/BKTL]
-	539A8-92251		BRACKET,REVOLVING	ﾌﾞﾗｹｯﾄ	1	[RLY/AW061][RLR/AW061]
-	535C8-92051		BRACKET,REVOLVING	ﾌﾞﾗｹｯﾄ	1	[SCB001/RLYS][SCB001/RLRS]
3	01100-08020		BOLT	ﾎﾞﾙﾄ	3	[RLY][RLR]
-	01185-08020		BOLT	ﾎﾞﾙﾄ	2	[SCB001/RLYS][SCB001/RLRS]
4	01400-00008		NUT	ﾅｯﾄ	3	[RLY][RLR] (WITHOUT SCB001/RLYS, SCB001/RLRS)
5	516G8-92001		WIRE,LEAD	ﾜｲﾔ	1	[RLY][RLR]
-	514A1-42191		WIRE,LEAD	ﾜｲﾔ	1	[RLY/BBR][RLR/BBR][RLY/RWL] [RLR/RWL]
6	27732-42311		CLAMP,HARNESS	ｸﾗﾝﾌﾟ	2	[RLY][RLR]
7	22679-47301		GROMMET	ｸﾞﾛﾒｯﾄ	1	[RLY][RLR]
8	516G1-42211		WIRE,LEAD	ﾜｲﾔ	1	[RLY][RLR]
-	539A8-92111		WIRE,LEAD	ﾜｲﾔ	1	[RLY/BBR][RLR/BBR]
-	514A1-42041		WIRE,LEAD	ﾜｲﾔ	1	[RLY/RWL][RLR/RWL]
9	26062-42881		RELAY,12V	ﾘﾚｰ	1	[RLY/BBR][RLR/BBR]
10	214A2-42611		SCREW	ｽｸﾘｭ	1	[RLY/BBR][RLR/BBR]

FIG.50 SPOT LIGHT [SPL]

(F5H22610) スポットライト

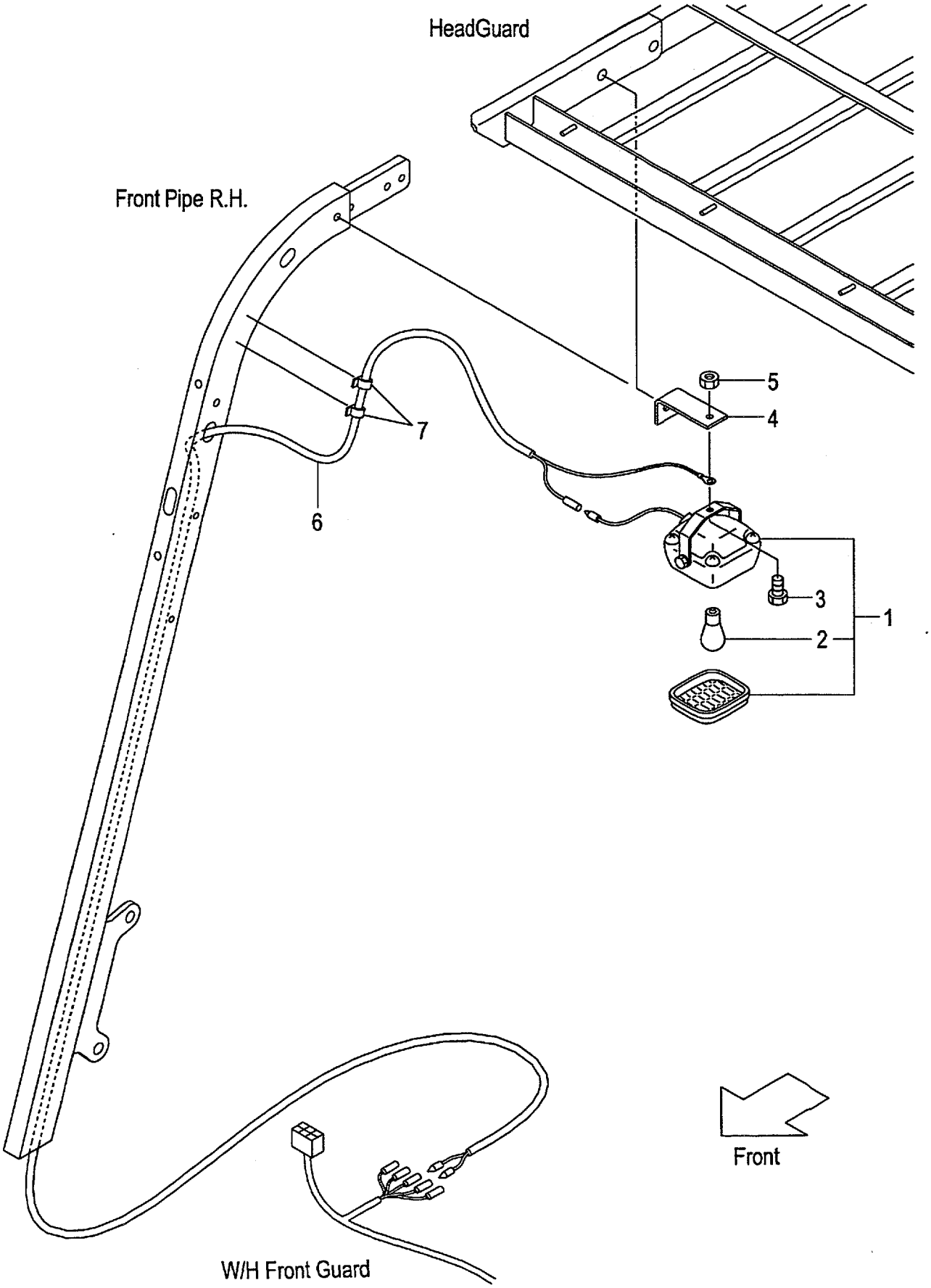

A:FG20C6H FG20T6H FG25C6H FG25T6H FG20W6H FG25W6H
B:FD20C6H FD20T6H FD25C6H FD25T6H FD20W6H FD25W6H

FIG.50
(F5H22610)

Item No	Part No.	Mark	Description		Req'd	Remarks : Serial No.
1	516G9-10101		LAMP	ﾗﾝﾌﾟ	1	[SPL] INC.2
2	516G9-12011		BULB,12V/18.2W	ﾊﾞﾙﾌﾞ	1	[SPL]
3	01185-08016		BOLT	ﾎﾞﾙﾄ	1	[SPL]
4	539A9-02001		BRACKET,SPOT-LAMP	ﾌﾞﾗｹｯﾄ	1	[SPL]
5	01400-00008		NUT	ﾅｯﾄ	1	[SPL]
6	539A9-02011		WIRE-HARNESS,SPOT-L.	ﾜｲﾔﾊｰﾈｽ	1	[SPL]
7	27732-42311		CLAMP,HARNESS	ｸﾗﾝﾌﾟ	2	[SPL]

FIG.51 HEATER UNIT [HR]

(F5H224U0) ヒータユニット

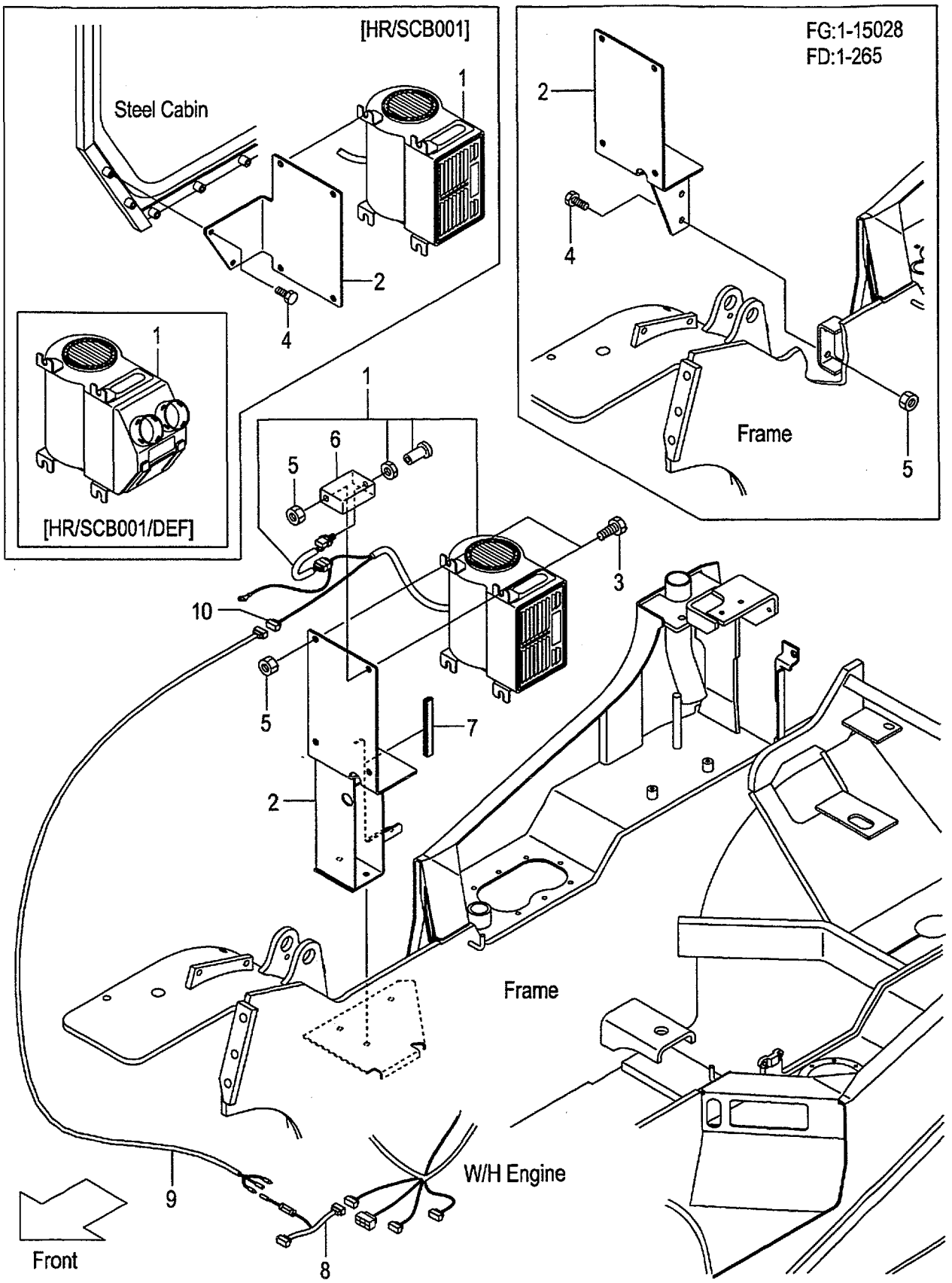

FIG.51
(F5H224U0)

A:FG20C6H FG20T6H FG25C6H FG25T6H FG20W6H FG25W6H
B:FD20C6H FD20T6H FD25C6H FD25T6H FD20W6H FD25W6H

Item No	Part No.	Mark	Description		Req'd	Remarks : Serial No.
1	514T7-20201		HEATER,CAR	ヒータ	1	[HR]
-	556C7-22001		HEATER,CAR	ヒータ	1	[HR/SCB001/DEF]
2	539A7-22011		BRACKET,HEATER	ブラケット	1	A:1-15028 B:1-265 [HR]
-	539A7-22511		BRACKET,HEATER	ブラケット	1	A:15029- B:266- [HR]
-	539A7-22211		BRACKET,HEATER	ブラケット	1	[HR/SCB001]
3	01186-10020		BOLT	ボルト	4	[HR]
4	01183-10025		BOLT	ボルト	2	A:1-15028 B:1-265 [HR]
-	01186-08020		BOLT	ボルト	2	[HR/SCB001]
5	01400-00010		NUT	ナット	6	A:1-15028 B:1-265 [HR]
-	01400-00010		NUT	ナット	4	A:15029- B:266- [HR]
-	01400-00010		NUT	ナット	4	[HR/SCB001]
6	539A7-22061		BRACKET,HEATER-SW.	ブラケット	1	[HR]
7	256J6-42291		RUBBER,SEAL	ラバー	1	A:15029- B:266- [HR](WITHOUT HR/SCB001)
8	514T7-22061		WIRE,LEAD	ワイヤ	1	[HR]
9	514A1-42041		WIRE,LEAD	ワイヤ	1	[HR]
10	534A7-22101		CONNECTOR,MALE	コネクタ	1	[HR]
11	27042-43501	+	TERMINAL	ターミナル	2	[HR]

FIG.52 HEATER VALVE & ELBOW (GASOLINE):[HR]

(F5H224W0) ヒータバルブ&エルボ

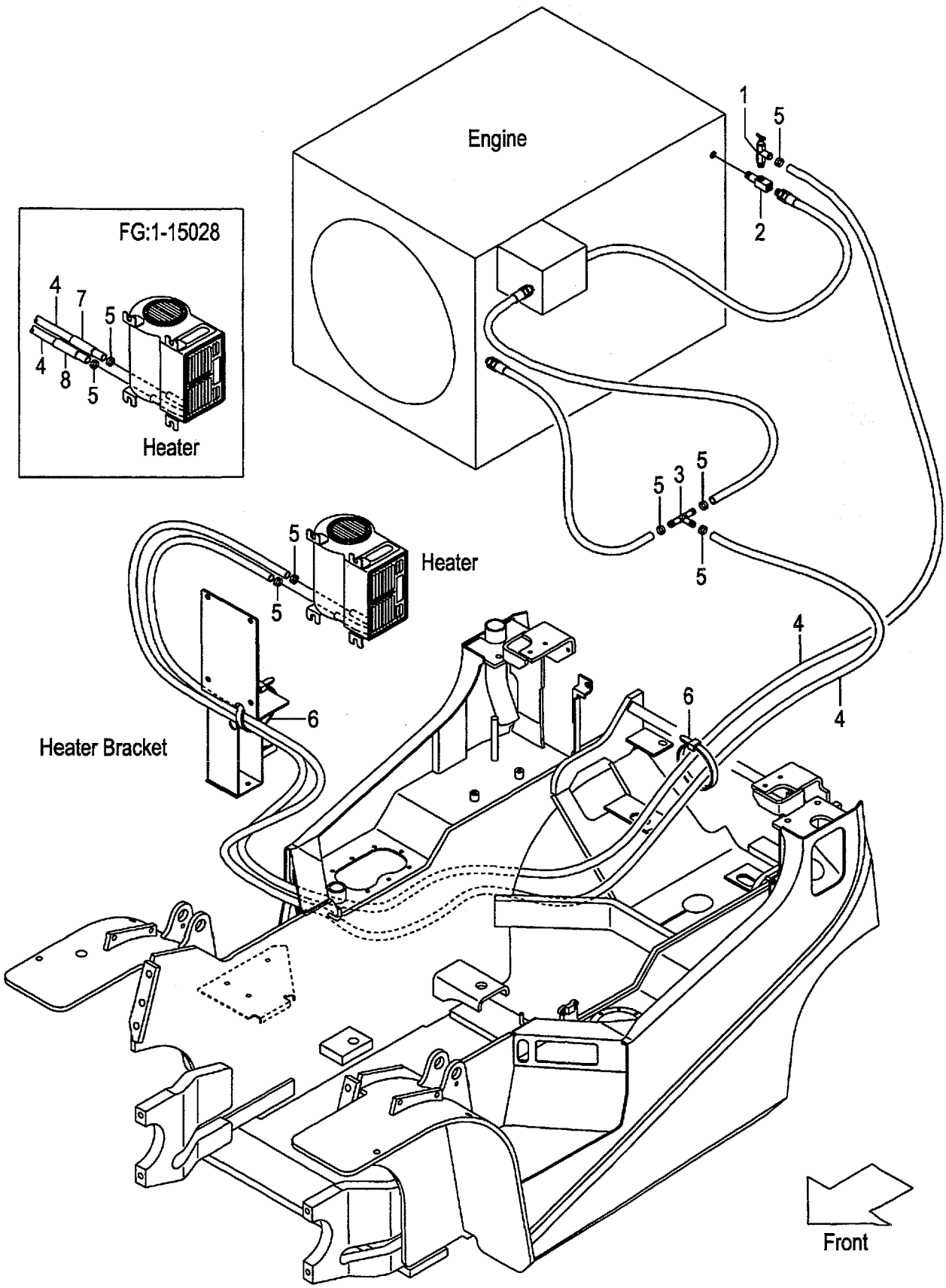

A:FG20C6H FG20T6H FG25C6H FG25T6H FG20W6H FG25W6H

Item No	Part No.	Mark	Description		Req'd	Remarks : Serial No.
1	56110-63521		VALVE,WATER	ﾊﾞﾙﾌﾞ	1	[HR]
2	55597-22111		ELBOW	ｴﾙﾎﾞ	1	[HR]
3	23679-45051		THREE-WAY	ｽﾘｰｳｴｲ	1	[HR]
-	516G7-22001		THREE-WAY	ｽﾘｰｳｴｲ	1	[HR/LPO]
4	522A7-22011		HOSE,WATER	ﾎｰｽ	2	[HR]
5	04911-00022		CLIP	ｸﾘｯﾌﾟ	6	[HR]
6	04913-11200		BAND	ﾊﾞﾝﾄﾞ	10	[HR]
7	534A7-22201		PROTECTOR,TUBE	ﾌﾟﾛﾃｸﾀ	1	1-15028 [HR]
8	534A7-22211		PROTECTOR,TUBE	ﾌﾟﾛﾃｸﾀ	1	1-15028 [HR]

FIG.53 HEATER VALVE & ELBOW (DIESEL):[HR]

(F5H224Y0) ﾋｰﾀﾊﾞﾙﾌﾞ&ｴﾙﾎﾞ

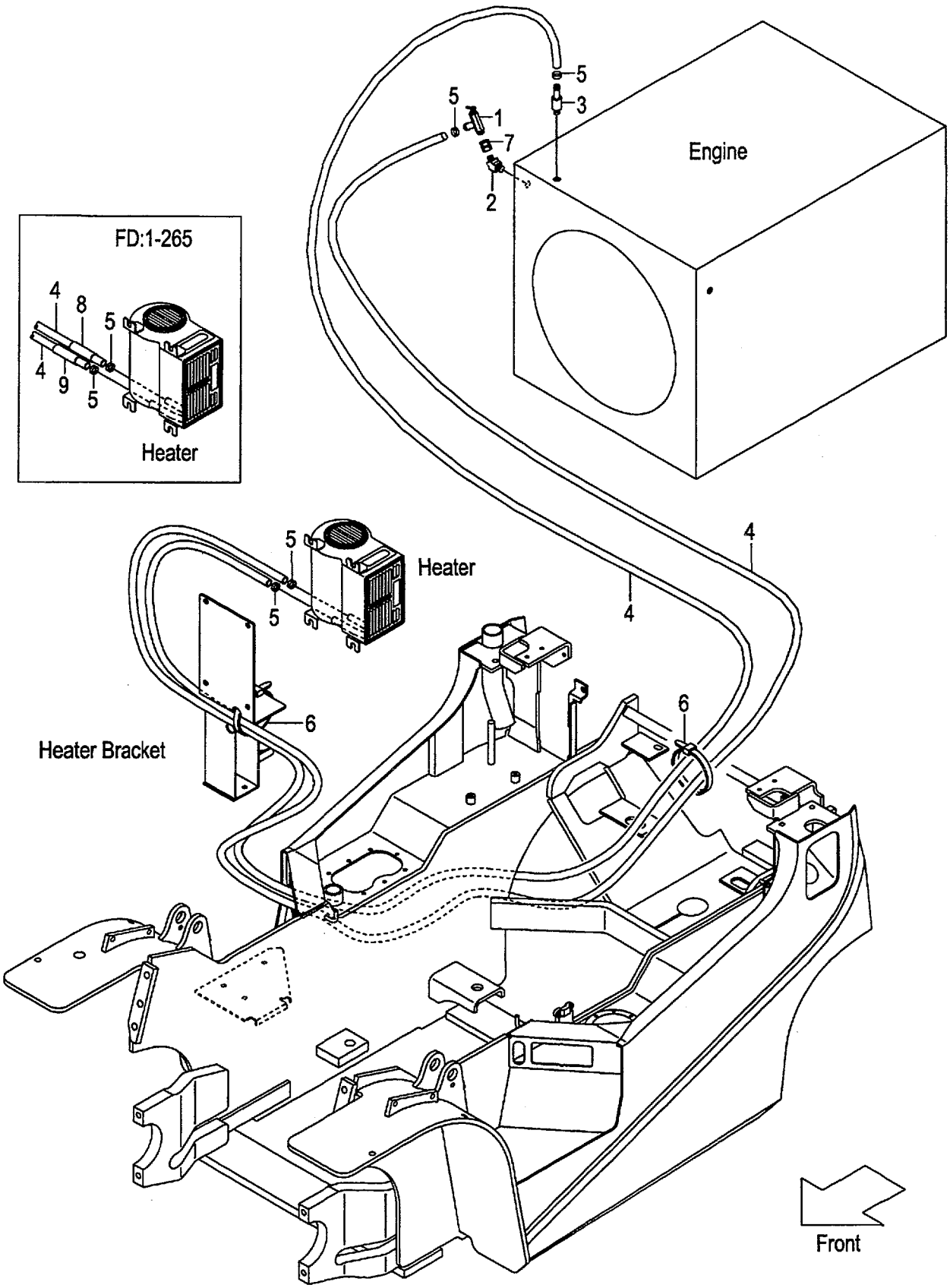

FIG.53
(F5H224Y0)

A:FD20C6H FD20T6H FD25C6H FD25T6H FD20W6H FD25W6H

Item No	Part No.	Mark	Description		Req'd	Remarks : Serial No.
1	56110-63521		VALVE,WATER	ﾊﾞﾙﾌﾞ	1	[HR]
2	53030-52471		ELBOW	ｴﾙﾎﾞ	1	1-265 [HR]
-	53130-12091		ELBOW	ｴﾙﾎﾞ	1	266- [HR]
3	529F7-22001		NIPPLE	ﾆｯﾌﾟﾙ	1	[HR]
4	522A7-22011		HOSE,WATER	ﾎｰｽ	2	[HR]
5	04911-00022		CLIP	ｸﾘｯﾌﾟ	4	[HR]
6	04913-11200		BAND	ﾊﾞﾝﾄﾞ	10	[HR]
7	04138-00303		UNION	ﾕﾆｵﾝ	1	266- [HR]
8	534A7-22201		PROTECTOR,TUBE	ﾌﾟﾛﾃｸﾀ	1	1-265 [HR]
9	534A7-22211		PROTECTOR,TUBE	ﾌﾟﾛﾃｸﾀ	1	1-265 [HR]

FIG.54 FAN [FAN]

(F5H22620) ファン

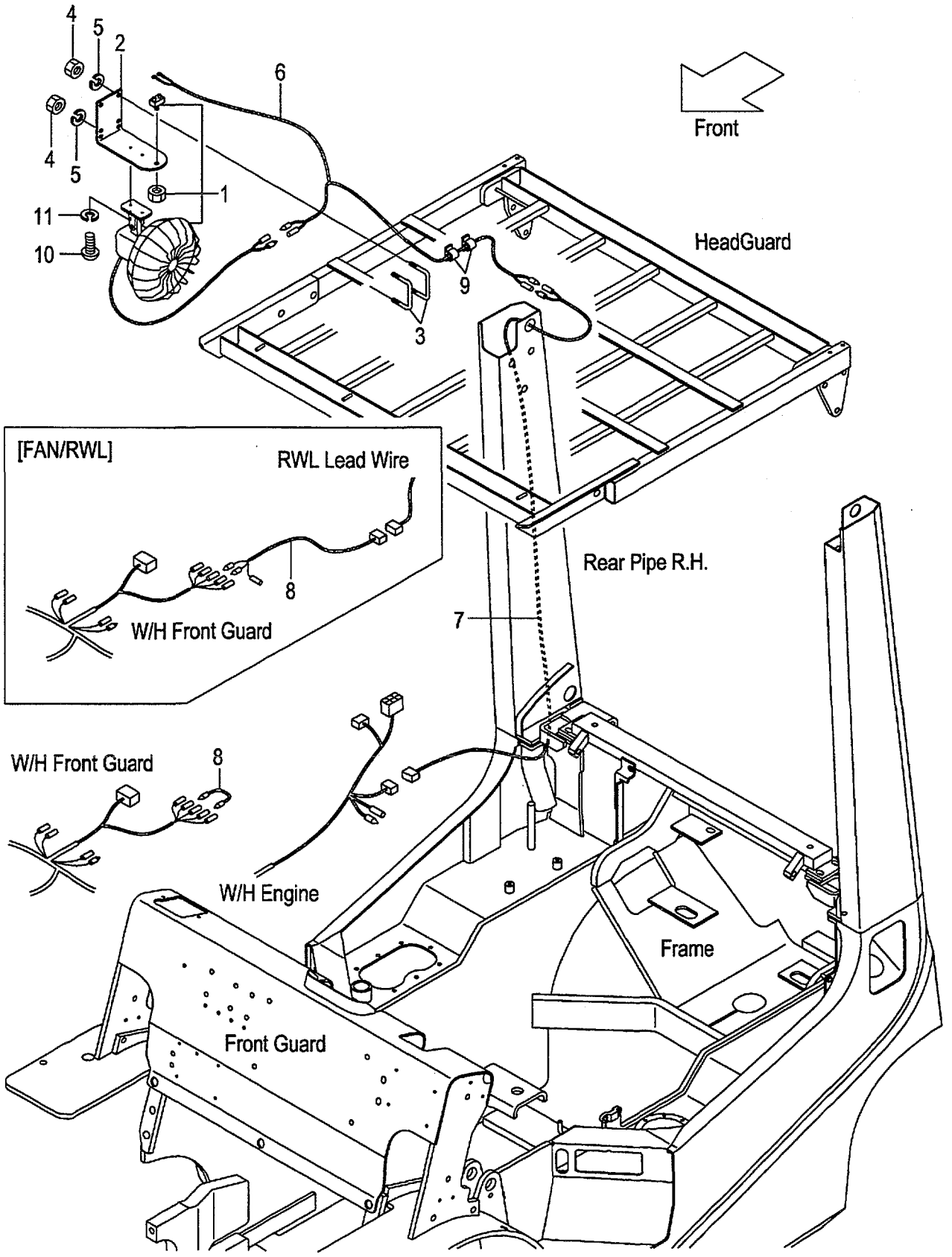

A:FG20C6H FG20T6H FG25C6H FG25T6H FG20W6H FG25W6H
B:FD20C6H FD20T6H FD25C6H FD25T6H FD20W6H FD25W6H

FIG.54
(F5H22620)

Item No	Part No.	Mark	Description		Req'd	Remarks : Serial No.
1	514A5-32341		FAN,CAR	ﾌｧﾝ	1	[FAN]
-	514A5-32341		FAN,CAR	ﾌｧﾝ	1	[FAN/SCB001]
2	539A8-22101		BRACKET,FAN	ﾌﾞﾗｹｯﾄ	1	[FAN](WITHOUT FAN/SCB001)
3	55812-42011		U-BOLT	Uﾎﾞﾙﾄ	2	[FAN](WITHOUT FAN/SCB001)
4	01400-00008		NUT	ﾅｯﾄ	4	[FAN](WITHOUT FAN/SCB001)
5	02010-00008		WASHER	ﾜｯｼｬ	4	[FAN](WITHOUT FAN/SCB001)
6	539A8-22151		WIRE-HARNESS,FAN	ﾜｲﾔﾊｰﾈｽ	1	[FAN](WITHOUT FAN/SCB001)
7	516G1-42101		WIRE,LEAD	ﾜｲﾔ	1	[FAN](WITHOUT FAN/SCB001)
8	516G1-42211		WIRE,LEAD	ﾜｲﾔ	1	[FAN](WITHOUT FAN/SCB001)
-	514A1-42041		WIRE,LEAD	ﾜｲﾔ	1	[FAN/RWL]
9	27732-42311		CLAMP,HARNESS	ｸﾗﾝﾌﾟ	4	[FAN](WITHOUT FAN/SCB001)
10	01030-04014		SCREW	ｽｸﾘｭ	2	[FAN]
-	01044-04014		SCREW	ｽｸﾘｭ	2	[FAN/SCB001]
11	02010-00004		WASHER	ﾜｯｼｬ	2	[FAN](WITHOUT FAN/SCB001)
12	229F6-42201	+	SEAL,PANEL-COVER,A	ｼｰﾙ	3	[FAN/SCB001]
13	229F6-42211	+	SEAL,PANEL-COVER,B	ｼｰﾙ	2	[FAN/SCB001]
14	534A5-33001	+	GROMMET	ｸﾞﾛﾒｯﾄ	2	[FAN/SCB001]

FIG.55 AMMETER [AM]

(F5H22630) アンメータ

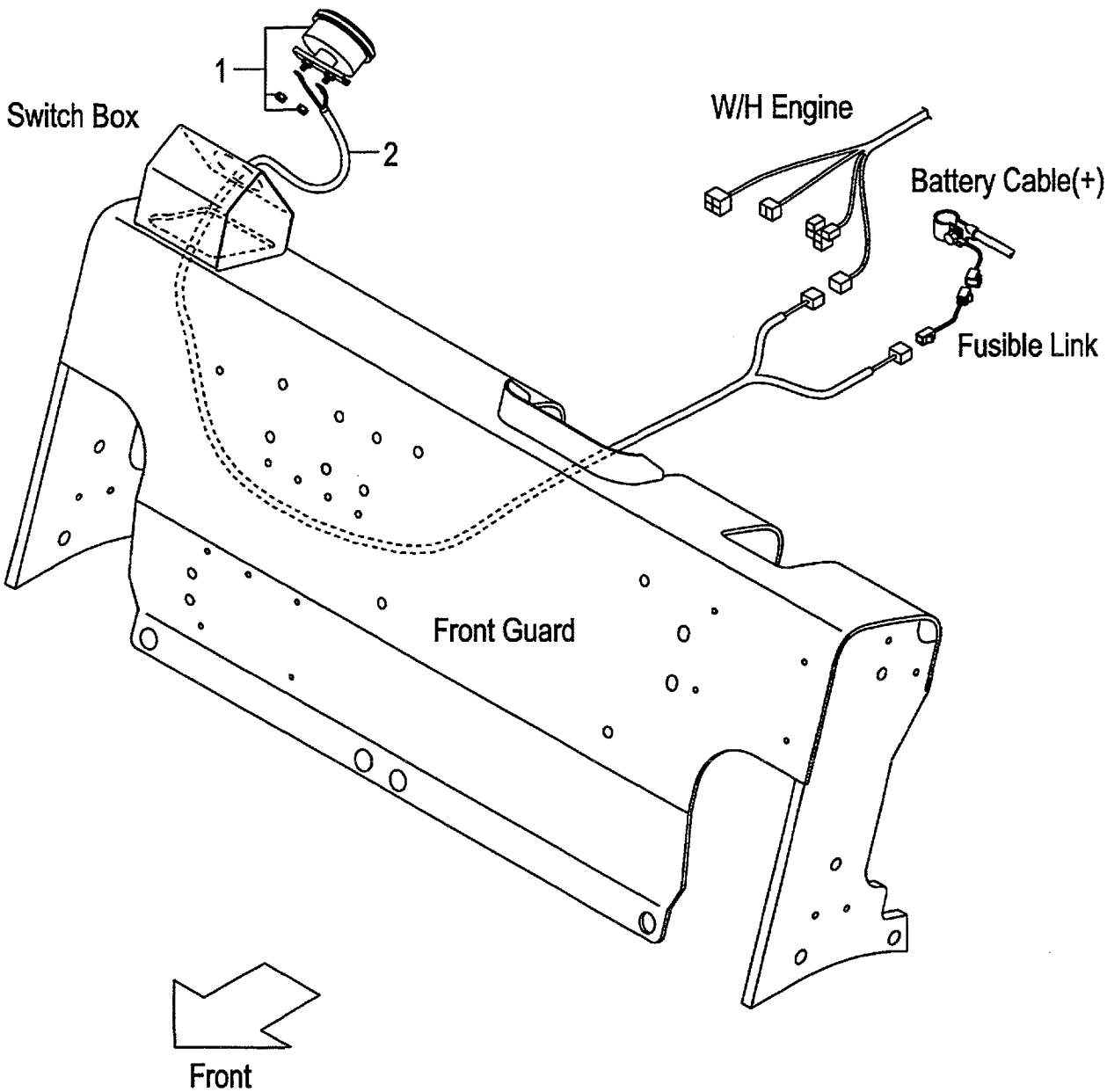

A:FG20C6H FG20T6H FG25C6H FG25T6H FG20W6H FG25W6H
B:FD20C6H FD20T6H FD25C6H FD25T6H FD20W6H FD25W6H

FIG.55
(F5H22630)

Item No	Part No.	Mark	Description	Req'd	Remarks : Serial No.
1	3956323		AMMETER,50A アンメータ	1	[AM]
2	516G6-12051		WIRE,LEAD,AMMETER ワイヤ	1	[AM]

FIG.56 TORQUE CONVERTER THERMOMETER [TTM]

(F5H22650) トルクコンバータサーモメータ

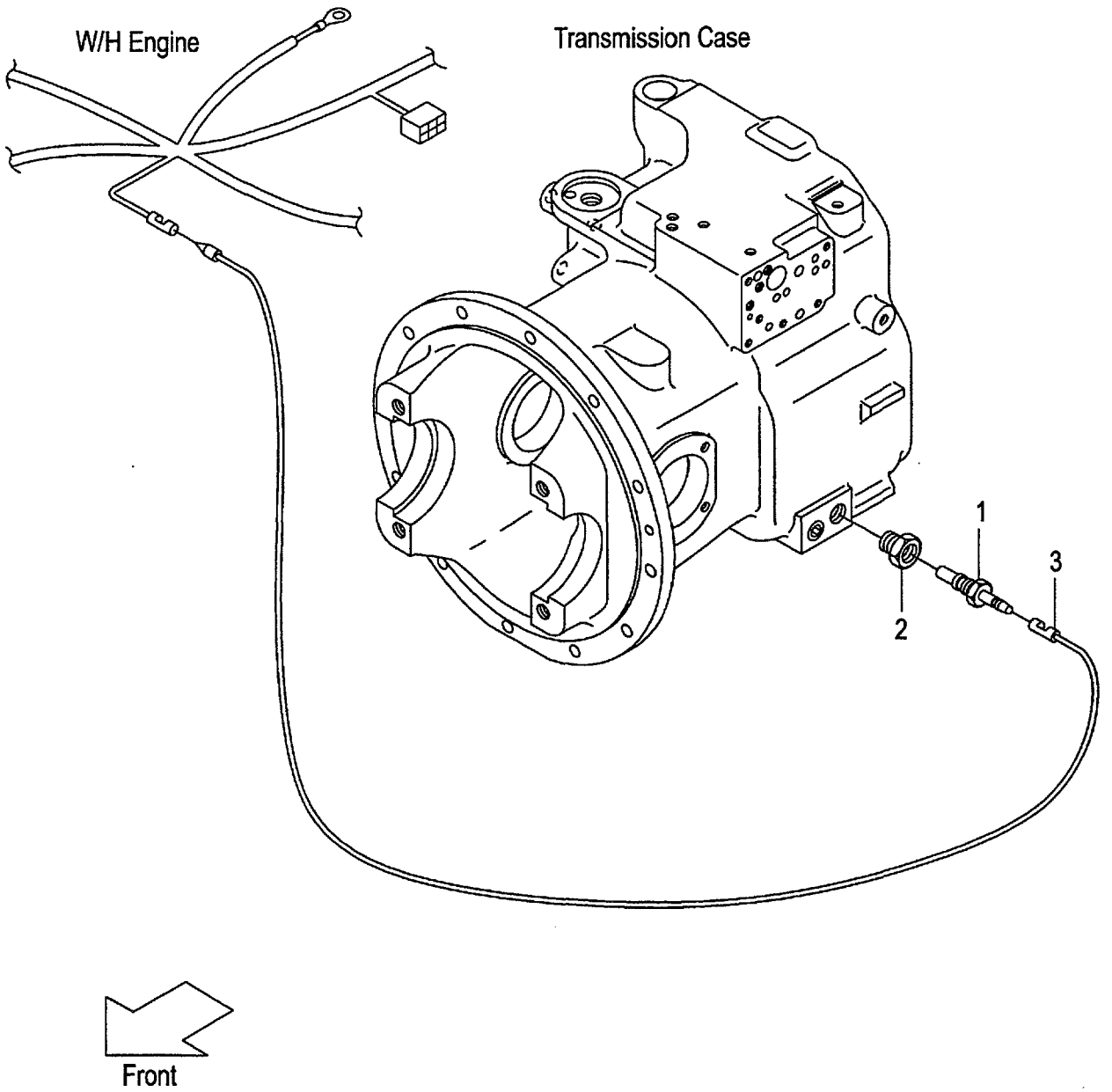

A:FG20T6H FG25T6H
B:FD20T6H FD25T6H

FIG.56
(F5H22650)

Item No	Part No.	Mark	Description	Req'd	Remarks : Serial No.
1	23652-44001		UNIT,SENDING ﾕﾆｯﾄ	1	[TTM]
2	521A2-42061		ADAPTER,THERMO-SW. ｱﾀﾞﾌﾟﾀ	1	[TTM]
3	214A2-42371		WIRE,LEAD ﾜｲﾔ	1	[TTM]

FIG.57 TORQUE CONVERTER PRESSURE METER [TPM]

(F5H22660) トルクコンバータプレッシャメータ

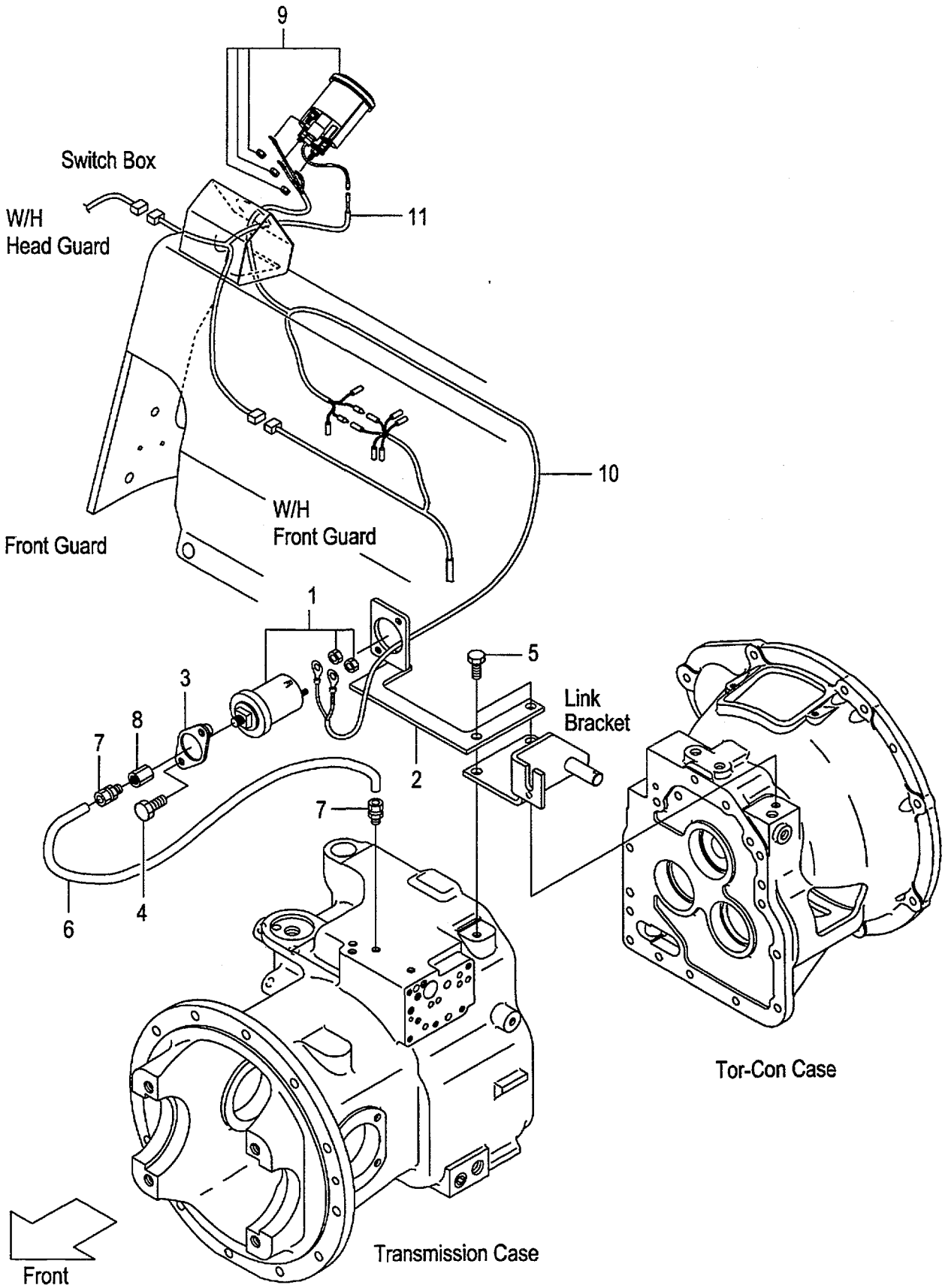

A:FG20T6H FG25T6H
B:FD20T6H FD25T6H

FIG.57
(F5H22660)

Item No	Part No.	Mark	Description		Req'd	Remarks : Serial No.
1	516G6-92001		SENSOR,PRESS.GAUGE	ｾﾝｻ	1	[TPM]
2	539B6-92111		BRACKET,SENSOR	ﾌﾞﾗｹｯﾄ	1	[TPM]
3	516G6-92151		COVER,SENSOR	ｶﾊﾞｰ	1	[TPM]
4	01186-08025		BOLT	ﾎﾞﾙﾄ	2	[TPM]
5	01184-10025		BOLT	ﾎﾞﾙﾄ	2	[TPM]
6	539B6-92211		PIPE,CAPPER	ﾊﾟｲﾌﾟ	1	[TPM]
7	516G6-92011		JOINT	ｼﾞｮｲﾝﾄ	2	[TPM]
8	516G6-92031		ADAPTER	ｱﾀﾞﾌﾟﾀ	1	[TPM]
9	516G6-92022		GAUGE,PRESSURE	ｹﾞｰｼﾞ	1	[TPM]
10	516G6-92201		WIRE-HARNESS,TPM	ﾜｲﾔﾊｰﾈｽ	1	[TPM]
11	516G6-92211		WIRE-HARNESS,TPM	ﾜｲﾔﾊｰﾈｽ	1	[TPM]

FIG.58 SPEED METER [SM]

(F5H22640) ｽﾋﾟｰﾄﾞﾒｰﾀ

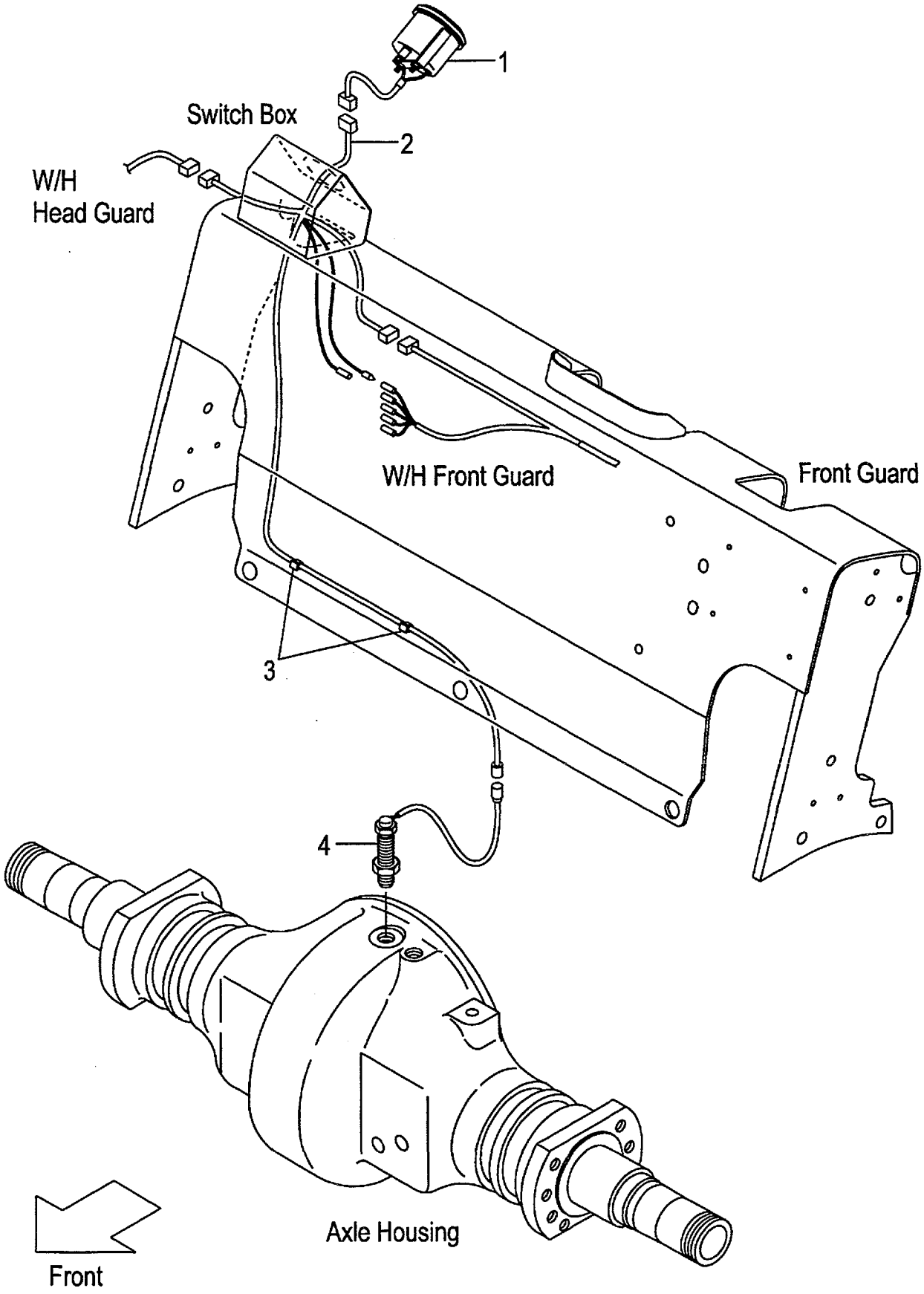

A:FG20C6H FG20T6H FG25C6H FG25T6H FG20W6H FG25W6H
B:FD20C6H FD20T6H FD25C6H FD25T6H FD20W6H FD25W6H

FIG.58
(F5H22640)

Item No	Part No.	Mark	Description		Req'd	Remarks : Serial No.
1	534A7-50101		METER,SPEED	ﾒｰﾀ	1	[SM]
2	516G7-50301		WIRE-HARNESS,SM	ﾜｲﾔﾊｰﾈｽ	1	[SM]
3	27732-42311		CLAMP,HARNESS	ｸﾗﾝﾌﾟ	2	[SM]
4	16402-54331		SENSOR	ｾﾝｻ	1	[SM]

FIG.59 SPEED DETECTOR UNIT [SAS]

(F5H22670) ｽﾋﾟｰﾄﾞﾃﾞｨﾃｸﾀﾕﾆｯﾄ

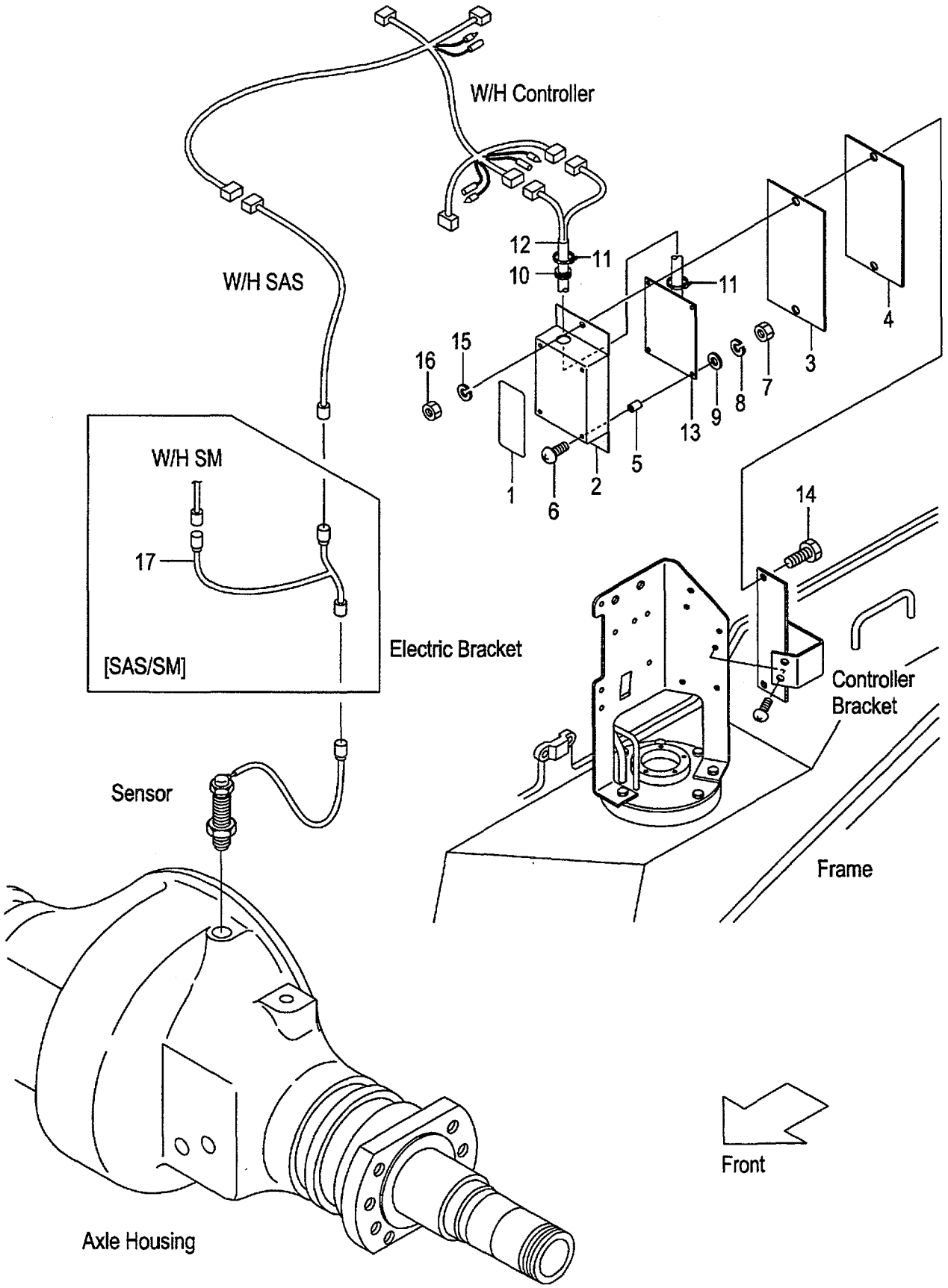

FIG.59
(F5H22670)

A:FG20C6H FG20T6H FG25C6H FG25T6H FG20W6H FG25W6H
B:FD20C6H FD20T6H FD25C6H FD25T6H FD20W6H FD25W6H

Item No	Part No.	Mark	Description	Req'd	Remarks : Serial No.
A1	534A7-50301		UNIT-ASSY,SPEED-DETECTOR スピードディテクタユニットアッセン	1	[SASB05][SASR05][SASC05] INC.1-16
-	534A7-50401		UNIT-ASSY,SPEED-DETECTOR スピードディテクタユニットアッセン	1	[SASB10][SASR10][SASC10] INC.1-16
-	534A7-50501		UNIT-ASSY,SPEED-DETECTOR スピードディテクタユニットアッセン	1	[SASB15][SASR15][SASC15] INC.1-16
1	539A7-52311		PLATE,NAME プレート	1	[SASB05][SASR05][SASC05]
-	539A7-52411		PLATE,NAME プレート	1	[SASB10][SASR10][SASC10]
-	539A7-52511		PLATE,NAME プレート	1	[SASB15][SASR15][SASC15]
2	55792-52601		CASE ケース	1	[SASB05&10&15][SASR05&10&15] [SASC05&10&15]
3	55792-52611		SEAT,SPONG シート	1	[SASB05&10&15][SASR05&10&15] [SASC05&10&15]
4	55792-52621		PLATE プレート	1	[SASB05&10&15][SASR05&10&15] [SASC05&10&15]
5	27042-64311		SPACER スペーサ	4	[SASB05&10&15][SASR05&10&15] [SASC05&10&15]
6	01030-04020		SCREW スクリュ	4	[SASB05&10&15][SASR05&10&15] [SASC05&10&15]
7	01400-00004		NUT ナット	4	[SASB05&10&15][SASR05&10&15] [SASC05&10&15]
8	02010-00004		WASHER ワッシャ	4	[SASB05&10&15][SASR05&10&15] [SASC05&10&15]
9	02000-00004		WASHER ワッシャ	4	[SASB05&10&15][SASR05&10&15] [SASC05&10&15]
10	205A2-63311		GROMMET グロメット	1	[SASB05&10&15][SASR05&10&15] [SASC05&10&15]
11	04913-10200		BAND バンド	2	[SASB05&10&15][SASR05&10&15] [SASC05&10&15]
12	55792-52641		WIRE-HARNESS,ATC ワイヤハーネス	1	[SASB05&10&15][SASR05&10&15] [SASC05&10&15]
13	534A7-52301		BOARD,PRINTED ボード	1	[SASB05][SASR05][SASC05]
-	534A7-52401		BOARD,PRINTED ボード	1	[SASB10][SASR10][SASC10]
-	534A7-52501		BOARD,PRINTED ボード	1	[SASB15][SASR15][SASC15]
14	01100-06020		BOLT ボルト	2	[SASB05&10&15][SASR05&10&15] [SASC05&10&15]
15	02010-00006		WASHER ワッシャ	2	[SASB05&10&15][SASR05&10&15] [SASC05&10&15]
16	01400-00006		NUT ナット	2	[SASB05&10&15][SASR05&10&15] [SASC05&10&15]
17	539A7-52041		WIRE-HARNESS,SAS/SM ワイヤハーネス	1	[SAS/SM]

FIG.60 SPEED ALARM SYSTEM [SASB]

(F5H22680) スピードアラームシステム

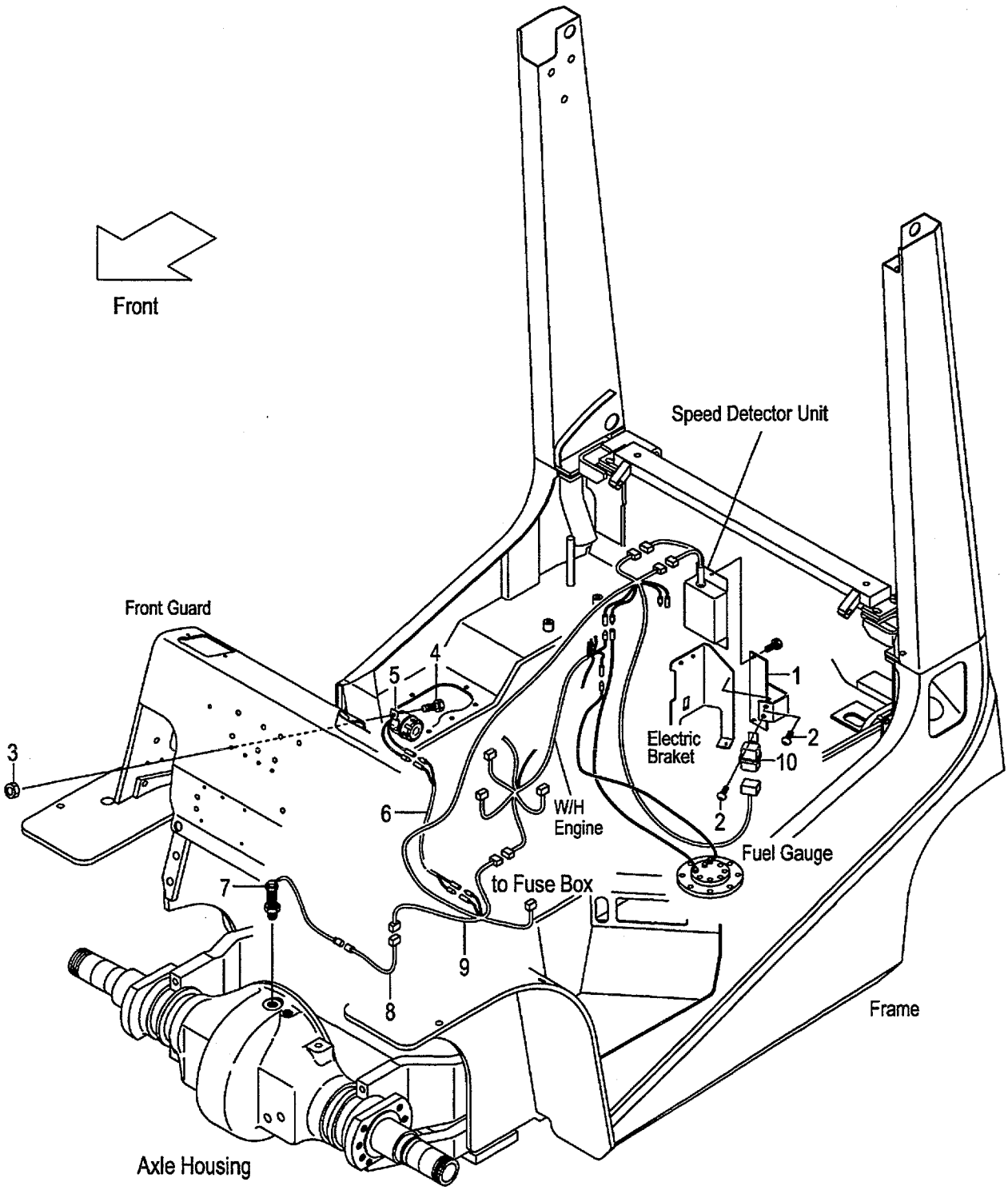

A:FG20C6H FG20T6H FG25C6H FG25T6H FG20W6H FG25W6H
B:FD20C6H FD20T6H FD25C6H FD25T6H FD20W6H FD25W6H

Item No	Part No.	Mark	Description		Req'd	Remarks : Serial No.
1	539A7-52001		BRACKET,CONTROLLER	ﾌﾞﾗｹｯﾄ	1	[SASB05][SASB10][SASB15]
2	214A2-42611		SCREW	ｽｸﾘｭ	2	[SASB05][SASB10][SASB15]
3	01400-00006		NUT	ﾅｯﾄ	1	[SASB05][SASB10][SASB15]
4	239A5-42381		BOLT	ﾎﾞﾙﾄ	1	[SASB05][SASB10][SASB15]
5	529F7-52241		ALARM,BUZZER	ｱﾗｰﾑ	1	[SASB05][SASB10][SASB15]
6	558A9-92001		WIRE-HARNESS,LICENCE	ﾜｲﾔﾊｰﾈｽ	1	[SASB05][SASB10][SASB15]
7	16402-54331		SENSOR	ｾﾝｻ	1	[SASB05][SASB10][SASB15]
8	534A7-50601		WIRE-HARNESS,SAS	ﾜｲﾔﾊｰﾈｽ	1	[SASB05][SASB10][SASB15]
9	539B7-52031		WIRE-HARNESS,CONTROL	ﾜｲﾔﾊｰﾈｽ	1	[SASB05][SASB10][SASB15]
10	26062-42881		RELAY,12V	ﾘﾚｰ	1	[SASB05][SASB10][SASB15]

FIG.61 SPEED ALARM SYSTEM [SASR]

(F5H22690) ｽﾋﾟｰﾄﾞｱﾗｰﾑｼｽﾃﾑ

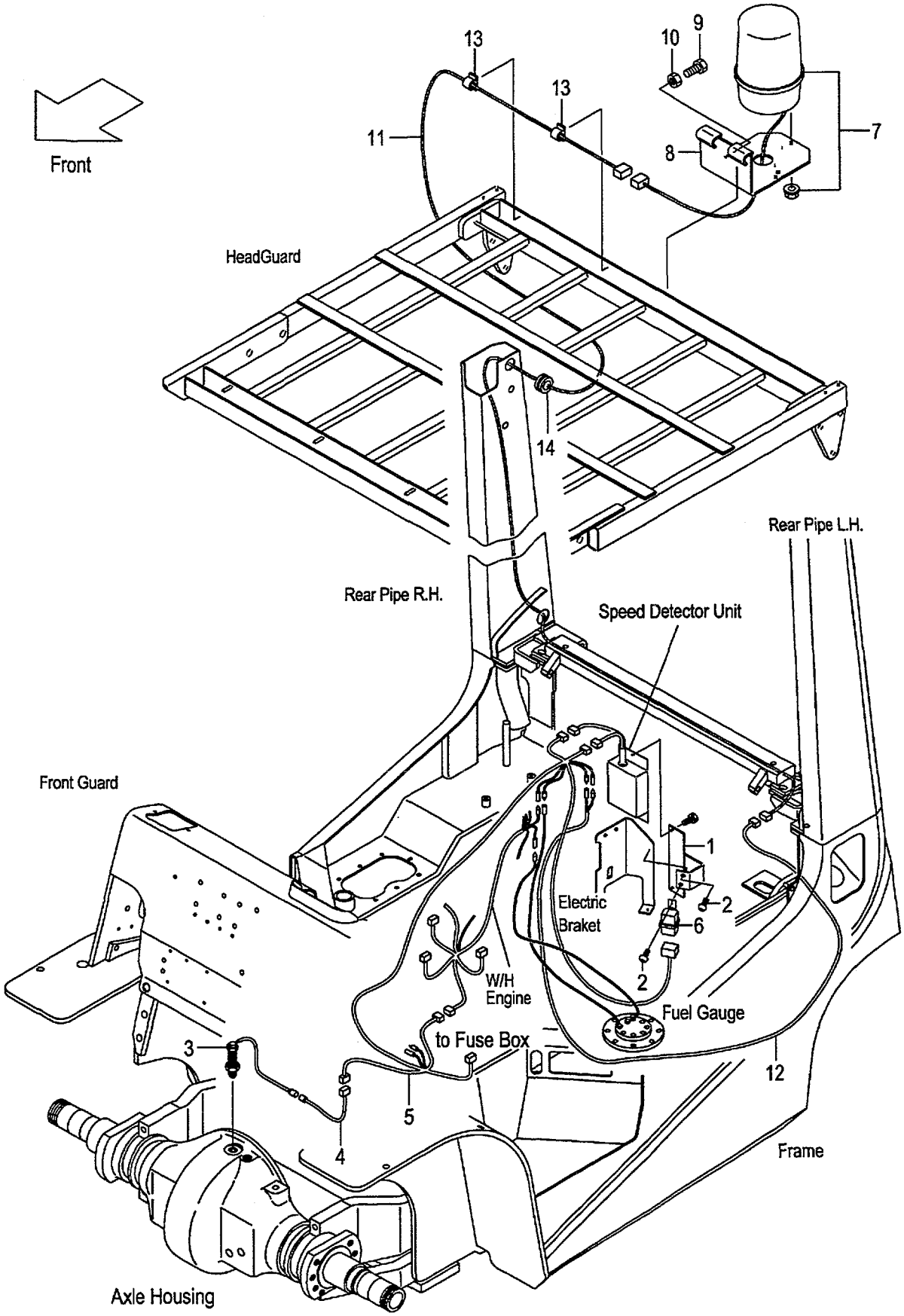

FIG.61
(F5H22690)

A:FG20C6H FG20T6H FG25C6H FG25T6H FG20W6H FG25W6H
B:FD20C6H FD20T6H FD25C6H FD25T6H FD20W6H FD25W6H

Item No	Part No.	Mark	Description	Req'd	Remarks : Serial No.
1	539A7-52001		BRACKET,CONTROLLER ﾌﾞﾗｹｯﾄ	1	[SASR05][SASR10][SASR15]
2	214A2-42611		SCREW ｽｸﾘｭ	2	[SASR05][SASR10][SASR15]
3	16402-54331		SENSOR ｾﾝｻ	1	[SASR05][SASR10][SASR15]
4	534A7-50601		WIRE-HARNESS,SAS ﾜｲﾔﾊｰﾈｽ	1	[SASR05][SASR10][SASR15]
5	539B7-52031		WIRE-HARNESS,CONTROL ﾜｲﾔﾊｰﾈｽ	1	[SASR05][SASR10][SASR15]
6	26062-42881		RELAY,12V ﾘﾚｰ	1	[SASR05][SASR10][SASR15]
7	514A1-41001		LIGHT,REVOLVING ﾗｲﾄ	1	[SASR05][SASR10][SASR15]
8	529F1-42251		BRACKET,REVOLVING ﾌﾞﾗｹｯﾄ	1	[SASR05][SASR10][SASR15]
9	01100-08020		BOLT ﾎﾞﾙﾄ	3	[SASR05][SASR10][SASR15]
10	01400-00008		NUT ﾅｯﾄ	3	[SASR05][SASR10][SASR15]
11	514A1-42191		WIRE,LEAD ﾜｲﾔ	1	[SASR05][SASR10][SASR15]
12	539A7-52101		WIRE,LEAD ﾜｲﾔ	1	[SASR05][SASR10][SASR15]
13	27732-42311		CLAMP,HARNESS ｸﾗﾝﾌﾟ	2	[SASR05][SASR10][SASR15]
14	22679-47301		GROMMET ｸﾞﾛﾒｯﾄ	1	[SASR05][SASR10][SASR15]

FIG.62 SPEED ALARM SYSTEM [SASC]

(F5H226A0) スピードアラームシステム

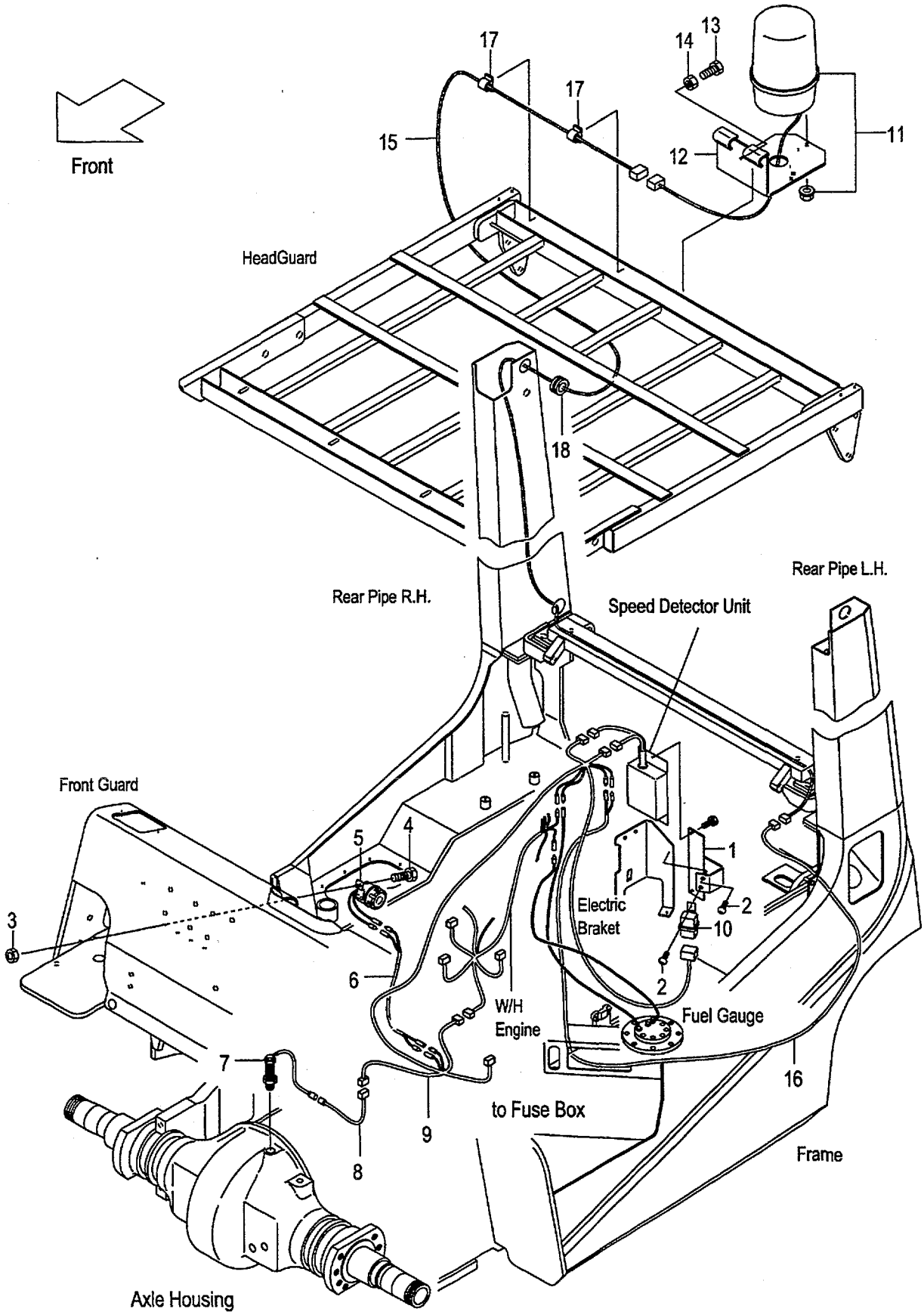

FIG.62
(F5H226A0)

A:FG20C6H FG20T6H FG25C6H FG25T6H FG20W6H FG25W6H
B:FD20C6H FD20T6H FD25C6H FD25T6H FD20W6H FD25W6H

Item No	Part No.	Mark	Description		Req'd	Remarks : Serial No.
1	539A7-52001		BRACKET,CONTROLLER	ﾌﾞﾗｹｯﾄ	1	[SASC05][SASC10][SASC15]
2	214A2-42611		SCREW	ｽｸﾘｭ	2	[SASC05][SASC10][SASC15]
3	01400-00006		NUT	ﾅｯﾄ	1	[SASC05][SASC10][SASC15]
4	239A5-42381		BOLT	ﾎﾞﾙﾄ	1	[SASC05][SASC10][SASC15]
5	529F7-52241		ALARM,BUZZER	ｱﾗｰﾑ	1	[SASC05][SASC10][SASC15]
6	558A9-92001		WIRE-HARNESS,LICENCE	ﾜｲﾔﾊｰﾈｽ	1	[SASC05][SASC10][SASC15]
7	16402-54331		SENSOR	ｾﾝｻ	1	[SASC05][SASC10][SASC15]
8	534A7-50601		WIRE-HARNESS,SAS	ﾜｲﾔﾊｰﾈｽ	1	[SASC05][SASC10][SASC15]
9	539B7-52031		WIRE-HARNESS,CONTROL	ﾜｲﾔﾊｰﾈｽ	1	[SASC05][SASC10][SASC15]
10	26062-42881		RELAY,12V	ﾘﾚｰ	1	[SASC05][SASC10][SASC15]
11	514A1-41001		LIGHT,REVOLVING	ﾗｲﾄ	1	[SASC05][SASC10][SASC15]
12	529F1-42251		BRACKET,REVOLVING	ﾌﾞﾗｹｯﾄ	1	[SASC05][SASC10][SASC15]
13	01100-08020		BOLT	ﾎﾞﾙﾄ	3	[SASC05][SASC10][SASC15]
14	01400-00008		NUT	ﾅｯﾄ	3	[SASC05][SASC10][SASC15]
15	514A1-42191		WIRE,LEAD	ﾜｲﾔ	1	[SASC05][SASC10][SASC15]
16	539A7-52101		WIRE,LEAD	ﾜｲﾔ	1	[SASC05][SASC10][SASC15]
17	27732-42311		CLAMP,HARNESS	ｸﾗﾝﾌﾟ	2	[SASC05][SASC10][SASC15]
18	22679-47301		GROMMET	ｸﾞﾛﾒｯﾄ	1	[SASC05][SASC10][SASC15]

FIG.63 OK MONITOR [OKM]

(F5H226B0) OKモニタ

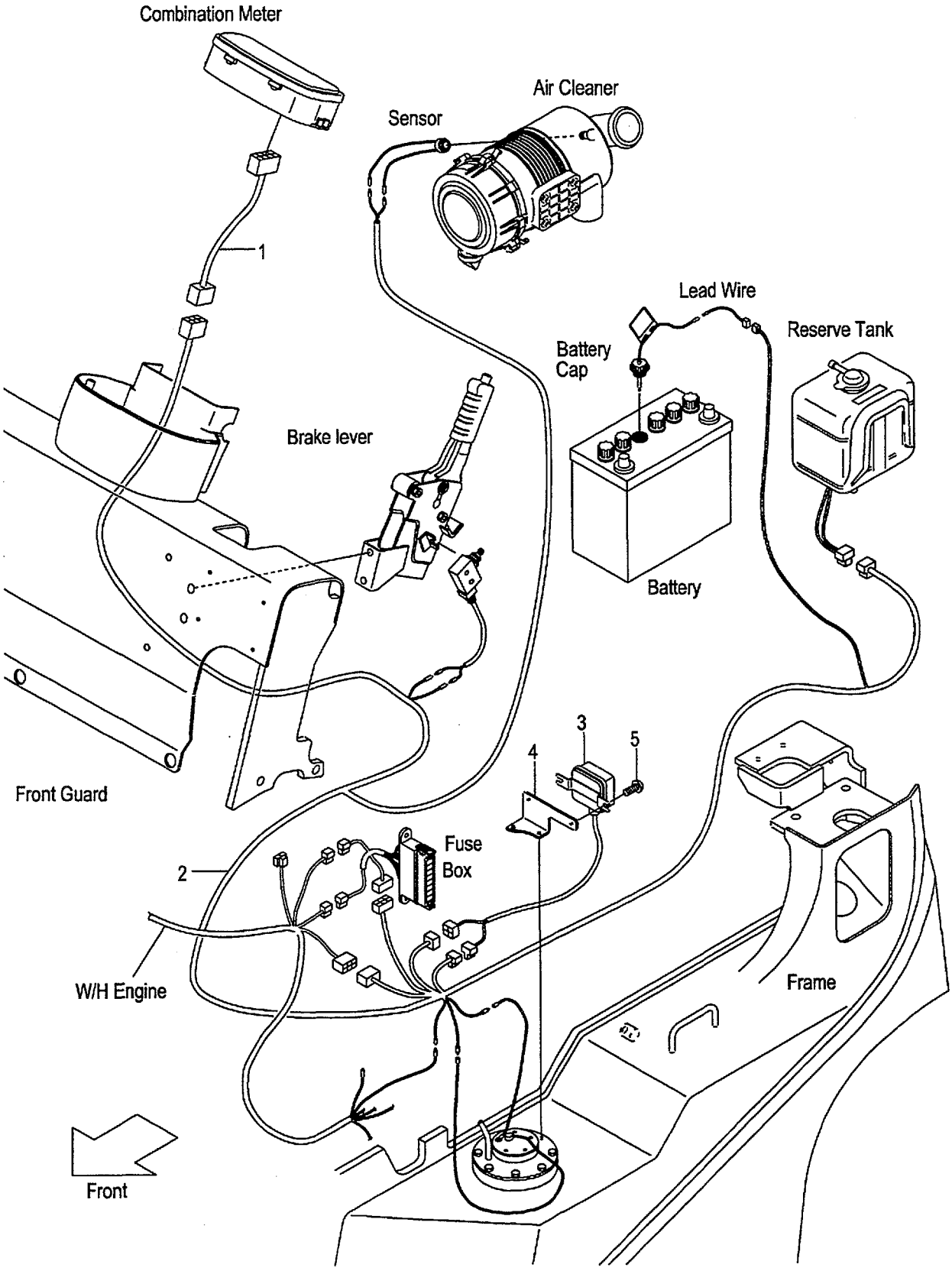

FIG.63
(F5H226B0)

A:FG20C6H FG20T6H FG25C6H FG25T6H FG20W6H FG25W6H
B:FD20C6H FD20T6H FD25C6H FD25T6H FD20W6H FD25W6H

Item No	Part No.	Mark	Description		Req'd	Remarks : Serial No.
1	516G6-22011		WIRE,LEAD	ﾜｲﾔ	1	[OKM]
2	539A6-22011		WIRE-HARNESS,OKM	ﾜｲﾔﾊｰﾈｽ	1	[OKM]
3	229F2-42161		MODULE,WARNING	ﾓｼﾞｭｰﾙ	1	[OKM]
4	539A6-22001		BRACKET,WARN.MODULE	ﾌﾞﾗｹｯﾄ	1	[OKM]
5	214A2-42611		SCREW	ｽｸﾘｭ	2	[OKM]

FIG.64 DRIVE UNIT MOUNT (CLUTCH)

(F5H22510) ﾄﾞﾗｲﾌﾞﾕﾆｯﾄﾏｳﾝﾄ

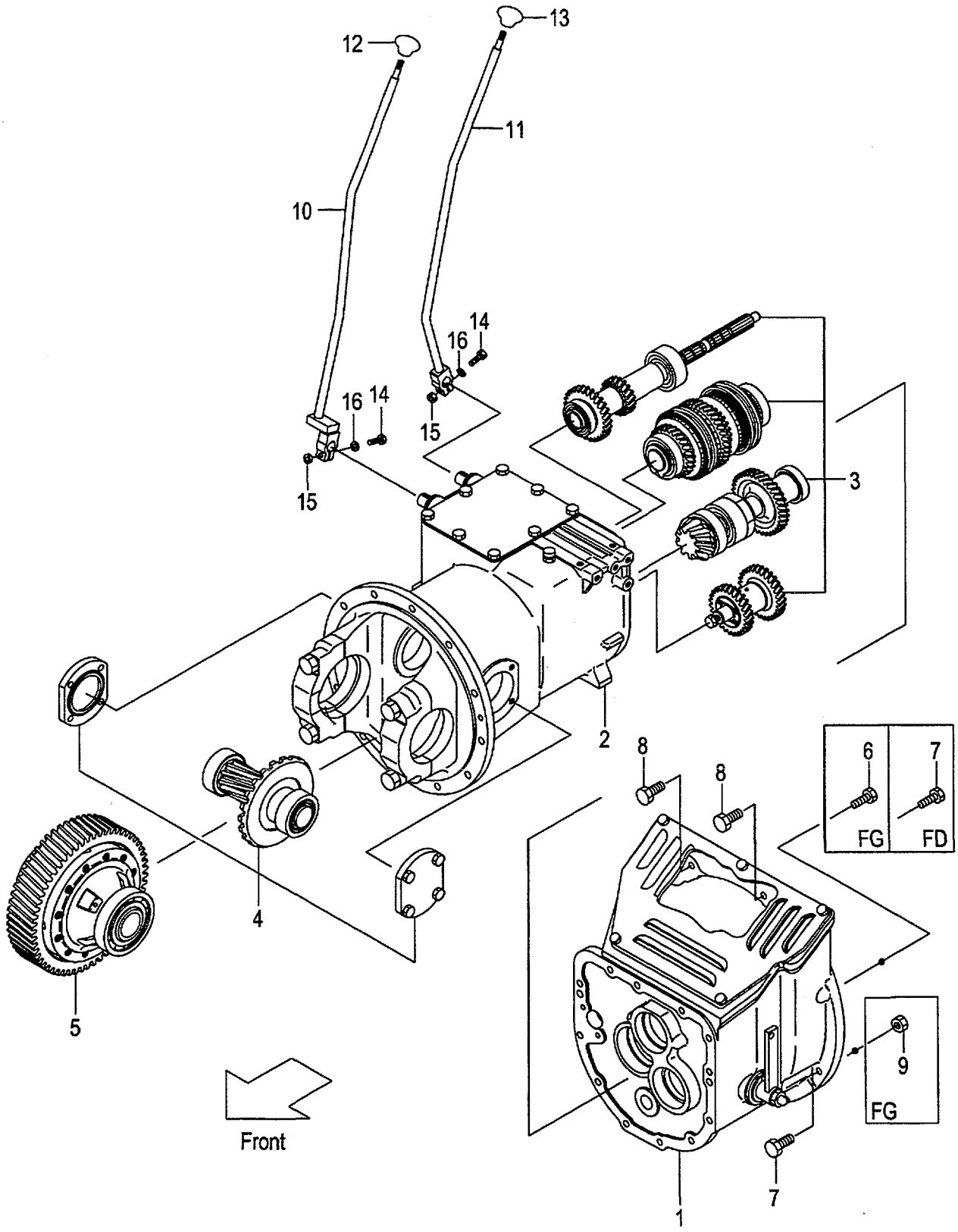

A:FG20C6H FG25C6H
B:FD20C6H FD25C6H

FIG.64
(F5H22510)

Item No	Part No.	Mark	Description		Req'd	Remarks : Serial No.
A1	137A2-50001		UNIT-ASSY,DRIVE	ﾄﾞﾗｲﾌﾞﾕﾆｯﾄｱｯｾﾝ	1	A INC.1-5
-	139A2-50001		UNIT-ASSY,DRIVE	ﾄﾞﾗｲﾌﾞﾕﾆｯﾄｱｯｾﾝ	1	B INC.1-5
-	137A2-50041		UNIT-ASSY,DRIVE	ﾄﾞﾗｲﾌﾞﾕﾆｯﾄｱｯｾﾝ	1	A [PC] INC.1-5
-	139A2-50041		UNIT-ASSY,DRIVE	ﾄﾞﾗｲﾌﾞﾕﾆｯﾄｱｯｾﾝ	1	B [PC] INC.1-5
1	NO PART NO.		CLUTCH	ｸﾗｯﾁ	1	A SEE FIG.65
-	NO PART NO.		CLUTCH	ｸﾗｯﾁ	1	B SEE FIG.65
-	NO PART NO.		CLUTCH	ｸﾗｯﾁ	1	A [PC]SEE FIG.65
-	NO PART NO.		CLUTCH	ｸﾗｯﾁ	1	B [PC]SEE FIG.65
2	NO PART NO.		CASE,T/M	ｹｰｽ	1	SEE FIG.66
3	NO PART NO.		GEAR,T/M	ｷﾞｬｰ	1	SEE FIG.67
4	NO PART NO.		REDUCTION	ﾘﾀﾞｸｼｮﾝ	1	SEE FIG.76
5	NO PART NO.		DIFFERENTIAL	ﾃﾞﾌｧﾚﾝｼｬﾙ	1	SEE FIG.77
6	01184-10040		BOLT	ﾎﾞﾙﾄ	1	A
7	01184-10050		BOLT	ﾎﾞﾙﾄ	5	A
-	01184-10035		BOLT	ﾎﾞﾙﾄ	6	B
8	01184-10035		BOLT	ﾎﾞﾙﾄ	2	A
-	01184-10030		BOLT	ﾎﾞﾙﾄ	2	B
9	01400-00010		NUT	ﾅｯﾄ	5	A
10	239A2-52001		LEVER,SPEED	ﾚﾊﾞｰ	1	
-	539A2-32001		LEVER,SPEED	ﾚﾊﾞｰ	1	[LCR]
11	239A2-52061		LEVER,DIRECTION	ﾚﾊﾞｰ	1	
-	539A2-32041		LEVER,DIRECTION	ﾚﾊﾞｰ	1	[LCR]
12	214A2-52002		KNOB,SPEED	ﾉﾌﾞ	1	
13	214A2-52012		KNOB,DIRECTION	ﾉﾌﾞ	1	
14	01183-08045		BOLT	ﾎﾞﾙﾄ	2	
15	01400-00008		NUT	ﾅｯﾄ	2	
16	02010-00008		WASHER	ﾜｯｼｬ	2	

FIG.65 CLUTCH (CLUTCH)

(F5H22520) クラッチ

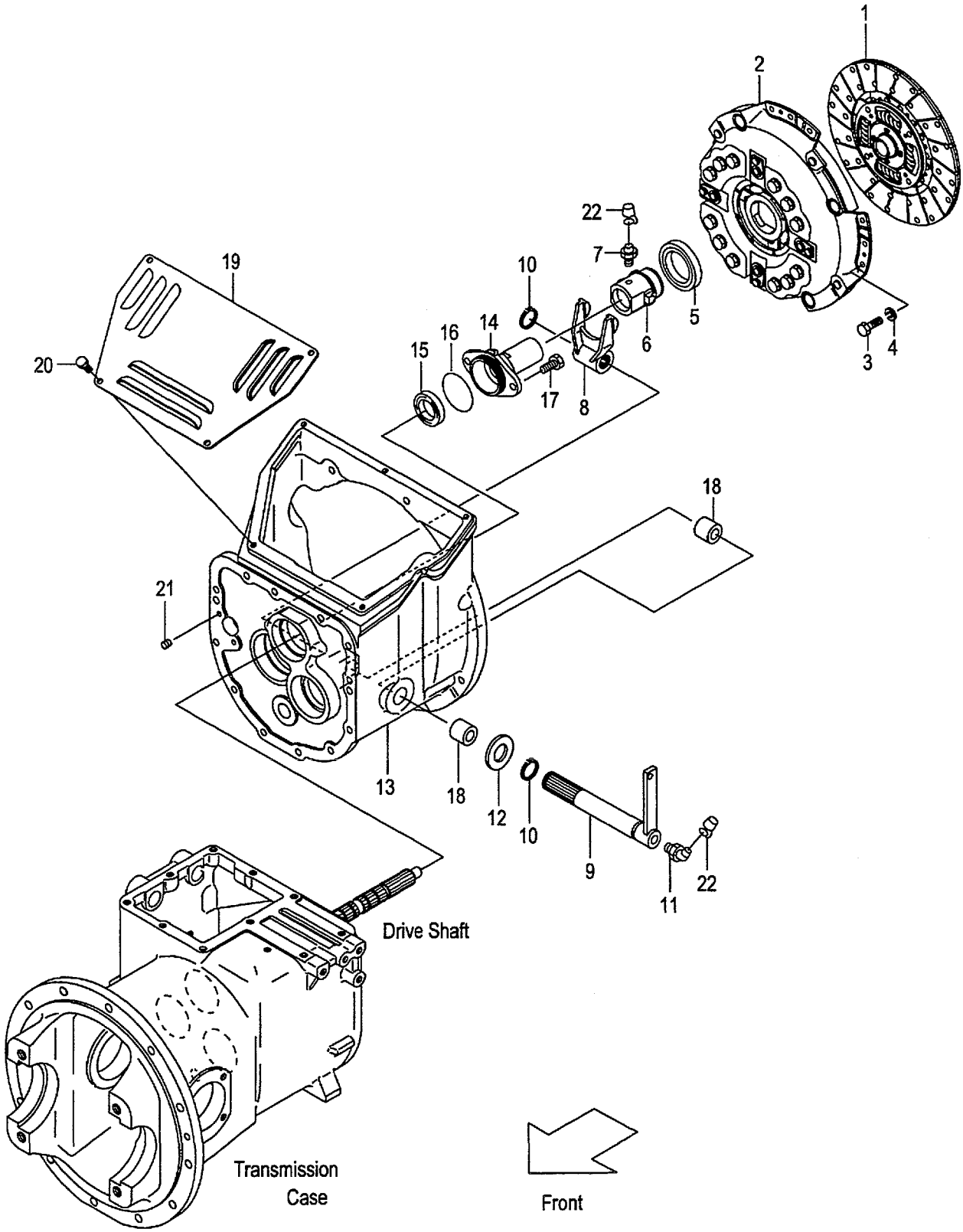

A:FG20C6H FG25C6H
B:FD20C6H FD25C6H

FIG.65
(F5H22520)

Item No	Part No.	Mark	Description		Req'd	Remarks : Serial No.
1	134A3-10211		DISK,CLUTCH	ﾃﾞｨｽｸ	1	A
-	139A3-10201		DISK,CLUTCH	ﾃﾞｨｽｸ	1	B
2	134A3-10201		COVER,CLUTCH	ｶﾊﾞｰ	1	
3	01103-08016		BOLT	ﾎﾞﾙﾄ	12	
4	02011-00008		WASHER	ﾜｯｼｬ	12	
5	15533-10301		BRG,THRUST	ﾍﾞｱﾘﾝｸﾞ	1	
6	134A3-12011		RETAINER,BRG	ﾘﾃｰﾅ	1	
-	113A3-12001		RETAINER,BRG	ﾘﾃｰﾅ	1	B
						[PC]
7	04901-00100		FITTING	ﾌｨｯﾃｨﾝｸﾞ	1	
8	114A3-12012		YOKE	ﾖｰｸ	1	
9	114A3-10501		SHAFT	ｼｬﾌﾄ	1	
-	524G2-10502		SHAFT	ｼｬﾌﾄ	1	[PC]
10	02100-00025	*	RING,SNAP	ｽﾅｯﾌﾟﾘﾝｸﾞ	2	
11	04901-00160		FITTING	ﾌｨｯﾃｨﾝｸﾞ	1	
12	02000-00024		WASHER	ﾜｯｼｬ	1	
13	134A3-12001		HOUSING,CLUTCH	ﾊｳｼﾞﾝｸﾞ	1	
14	134A3-12021		SUPPORT,RETAINER	ｻﾎﾟｰﾄ	1	
15	134A3-12031	*	SEAL,OIL	ｼｰﾙ	1	
16	03310-00600	*	O-RING	Oﾘﾝｸﾞ	1	
17	01213-10025		BOLT	ﾎﾞﾙﾄ	2	
18	12003-12021		BUSHING	ﾌﾞｯｼﾝｸﾞ	2	
19	124G3-12011		COVER,CLUTCH-HOUSING	ｶﾊﾞｰ	1	
20	01183-08016		BOLT	ﾎﾞﾙﾄ	5	
21	01066-08008		PLUG	ﾌﾟﾗｸﾞ	2	
22	22199-12401		CAP,NIPPLE	ｷｬｯﾌﾟ	2	
K1	134A3-48911		KIT,REPAIR,T/M	ﾘﾍﾟｱｷｯﾄ	1	INC.10,15,16 &,OTHERS

FIG.66 MISSION CASE (CLUTCH)(OIL CLUTCH)

(F5H22530) ミッションケース

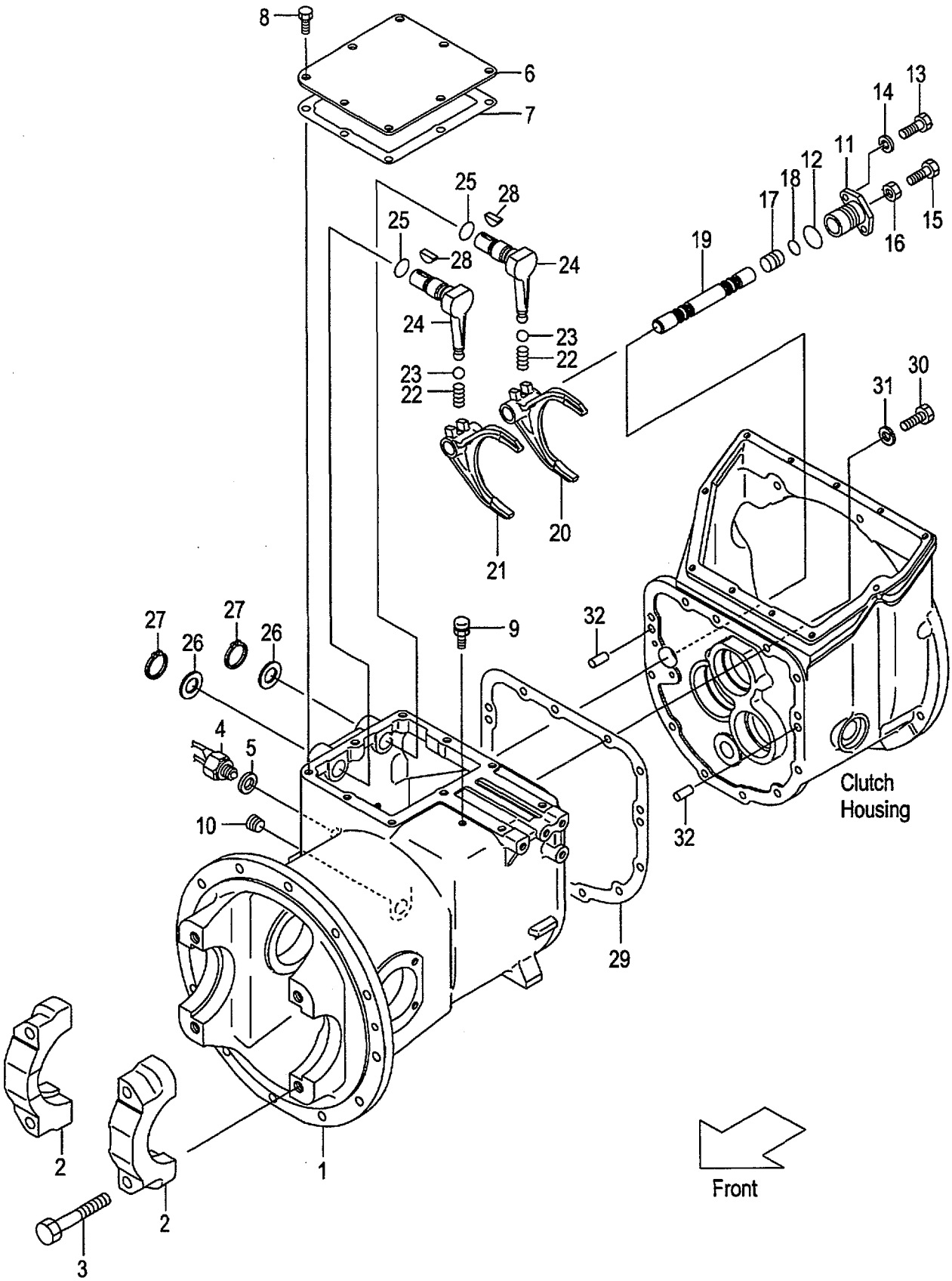

A:FG20C6H FG25C6H C:FD20C6H FD25C6H
B:FG20W6H FG25W6H D:FD20W6H FD25W6H

FIG.66
(F5H22530)

Item No	Part No.	Mark	Description		Req'd	Remarks : Serial No.
A1	134A3-40201		CASE-ASSY,T/M		1	INC.1,2
				トランスミッションケースアッセン		
1	NO PART NO.	#	CASE,T/M	ケース	1	
2	134A3-42011		CAP,BRG	キャップ	2	
3	134A3-42221		BOLT	ボルト	4	
4	12003-42451		SWITCH,BACK-LAMP	スイッチ	2	
5	12003-42461	*	PACKING,BACK-LAMP	パッキング	2	
6	134A3-42021		COVER,CASE	カバー	1	
7	134A3-42031	*	GASKET,CASE-COVER	ガスケット	1	
8	01184-10016		BOLT	ボルト	8	
9	15573-42151		BREATHER,AIR	ブリーザ	1	
10	12163-82541		PLUG	プラグ	1	
11	12003-42052		SUPPORT,ARM-SHAFT	サポート	1	
12	03310-00300	*	O-RING	Oリング	1	
13	01103-08020		BOLT	ボルト	2	
14	02011-00008		WASHER	ワッシャ	2	
15	01123-10045		BOLT	ボルト	1	
16	01400-00010		NUT	ナット	1	
17	12003-42061		SPACER	スペーサ	1	
18	03300-00160	*	O-RING	Oリング	1	
19	134A3-42401		ROD,SHIFT	ロッド	1	
20	134A3-42411		FORK,SHIFT,F-R	フォーク	1	
21	134A3-42421		FORK,SHIFT,H-L	フォーク	1	
22	12003-42421		SPRING	スプリング	2	
23	03190-00013		BALL,STEEL	ボール	2	
24	134A3-42431		LEVER,SHIFT	レバー	2	
25	134A3-42451	*	O-RING	Oリング	2	
26	02000-00022		WASHER	ワッシャ	2	
27	02100-00022	*	RING,SNAP	スナップリング	2	
28	02360-05019	*	KEY	キー	2	
29	134A3-12051	*	GASKET	ガスケット	1	
30	01103-10030		BOLT	ボルト	12	
31	02011-00010		WASHER	ワッシャ	12	
32	02212-12020		PIN,PARALLEL	ピン	2	
K1	134A3-48911		KIT,REPAIR,T/M	リペアキット	1	A,C INC.5,7,12,18,25,27-29 & OTHERS

FIG.67 MISSION GEAR (CLUTCH)(OIL CLUTCH)

(F5H22540) ミッションギヤー

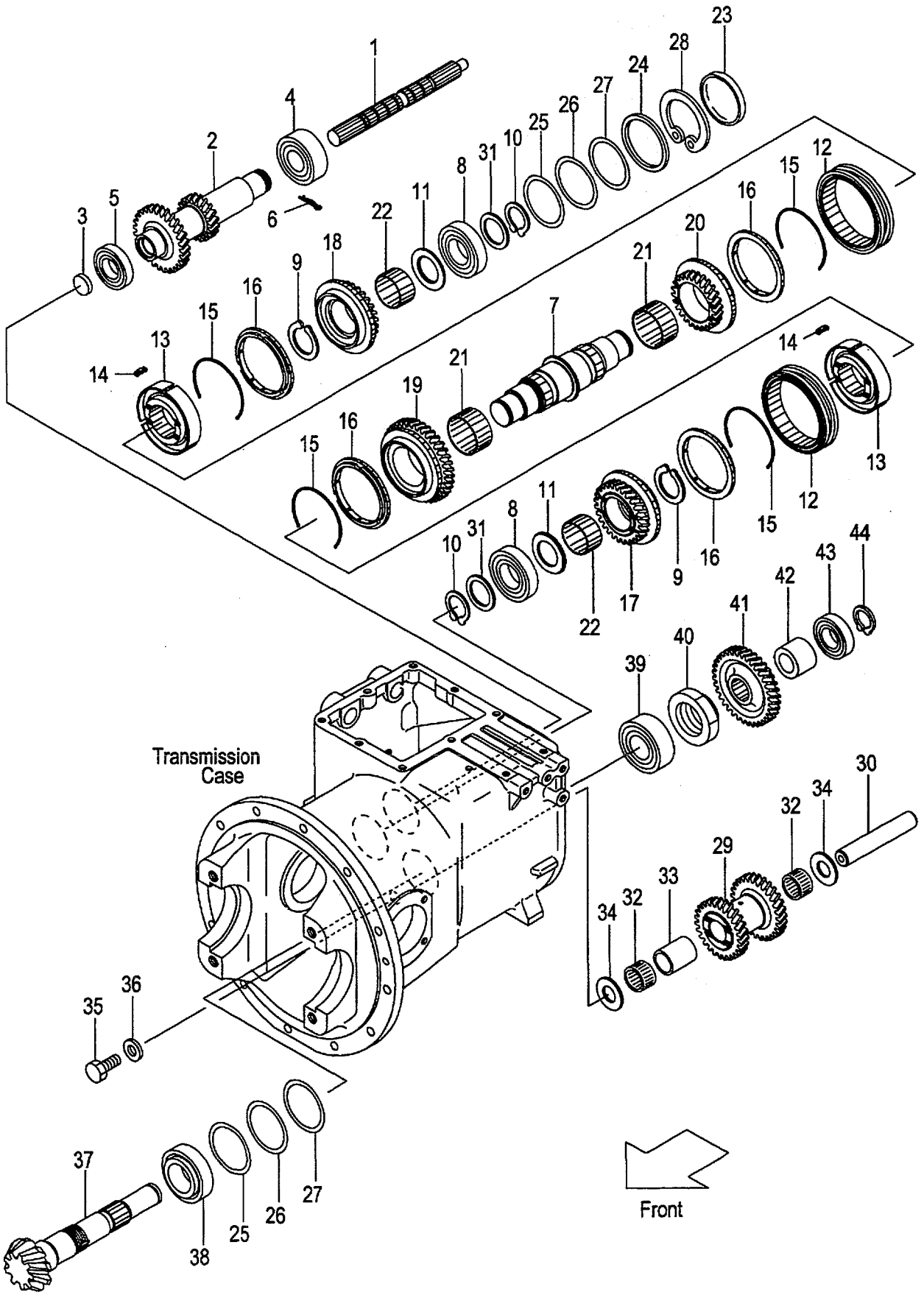

A:FG20C6H FG25C6H C:FD20C6H FD25C6H
B:FG20W6H FG25W6H D:FD20W6H FD25W6H

FIG.67
(F5H22540)

Item No	Part No.	Mark	Description		Req'd	Remarks : Serial No.
1	134A3-42051		SHAFT,MAIN-DRIVE	ｼｬﾌﾄ	1	
2	139A3-42001		SHAFT,INPUT	ｼｬﾌﾄ	1	
3	134A3-42071		CAP	ｷｬｯﾌﾟ	1	
4	03000-06207		BRG,BALL	ﾍﾞｱﾘﾝｸﾞ	1	
5	03000-06208		BRG,BALL	ﾍﾞｱﾘﾝｸﾞ	1	
6	134A3-42081	*	PIN,SNAP	ﾋﾟﾝ	1	
7	134A3-42101		SHAFT,MAIN	ｼｬﾌﾄ	1	
8	134A3-42211		BRG,BALL	ﾍﾞｱﾘﾝｸﾞ	2	
9	02120-00050	*	RING,SNAP	ｽﾅｯﾌﾟﾘﾝｸﾞ	2	
10	02100-00040	*	RING,SNAP	ｽﾅｯﾌﾟﾘﾝｸﾞ	2	
11	124T3-43001		PLATE,THRUST	ﾌﾟﾚｰﾄ	2	
A1	134A3-40221		SYNCHRONIZER-ASSY	ｼﾝｸﾛﾅｲｻﾞｱｯｾﾝ	2	INC.12-15
12	134A3-42111		SLEEVE	ｽﾘｰﾌﾞ	2	
13	134A3-42121		HUB,CLUTCH	ﾊﾌﾞ	2	
14	15573-42011		INSERT	ｲﾝｻｰﾄ	6	
15	134A3-42131		SPRING	ｽﾌﾟﾘﾝｸﾞ	4	
16	134A3-42141		RING,BLOCK	ﾘﾝｸﾞ	4	
17	139A3-42011		GEAR,HIGH	ｷﾞﾔｰ	1	
18	134A3-42151		GEAR,HIGH & FORWAD	ｷﾞﾔｰ	1	
19	134A3-42161		GEAR,LOW-SPEED	ｷﾞﾔｰ	1	
20	134A3-42171		GEAR,REVERSE	ｷﾞﾔｰ	1	
21	134A3-42181		BRG,NEEDLE	ﾍﾞｱﾘﾝｸﾞ	2	
22	134A3-42191		BRG,NEEDLE	ﾍﾞｱﾘﾝｸﾞ	2	
23	134A3-42201	*	CAP	ｷｬｯﾌﾟ	1	
24	10113-40171		WASHER	ﾜｯｼｬ	1	
25	12003-42311	*	SHIM,T-0.5	ｼﾑ	2	
26	12003-42321	*	SHIM,T-0.2	ｼﾑ	4	
27	12003-42331	*	SHIM,T-0.1	ｼﾑ	2	
28	02121-00080	*	RING,SNAP	ｽﾅｯﾌﾟﾘﾝｸﾞ	1	
29	134A3-42251		GEAR,COUNTER	ｷﾞﾔｰ	1	
30	134A3-42261		SHAFT,COUNTER-GEAR	ｼｬﾌﾄ	1	
31	15913-42511		SPACER	ｽﾍﾟｰｻ	2	
32	12003-42281		BRG,NEEDLE	ﾍﾞｱﾘﾝｸﾞ	2	
33	12003-42291		SPACER	ｽﾍﾟｰｻ	1	
34	134A3-42271		PLATE,THRUST	ﾌﾟﾚｰﾄ	2	
35	01103-10020		BOLT	ﾎﾞﾙﾄ	1	
36	02000-00010		WASHER	ﾜｯｼｬ	1	
37	134A3-42301		SHAFT,OUTPUT	ｼｬﾌﾄ	1	
38	115G3-82641		BRG,TAPER-ROLLER	ﾍﾞｱﾘﾝｸﾞ	1	
39	12003-43031		BRG,TAPER-ROLLER	ﾍﾞｱﾘﾝｸﾞ	1	
40	115G3-82471	*	NUT	ﾅｯﾄ	1	
41	134A3-42321		GEAR,OUTPUT	ｷﾞﾔｰ	1	
42	134A3-42331		SPACER	ｽﾍﾟｰｻ	1	
43	03000-06306		BRG,BALL	ﾍﾞｱﾘﾝｸﾞ	1	
44	02100-00030	*	RING,SNAP	ｽﾅｯﾌﾟﾘﾝｸﾞ	1	
K1	134A3-48911		KIT,REPAIR,T/M	ﾘﾍﾟｱｷｯﾄ	1	A,C INC.6,9,10,23,25-28,40,44 & OTHERS

FIG.68 DRIVE UNIT MOUNT (OIL CLUTCH)

(F5H225J0) ﾄﾞﾗｲﾌﾞﾕﾆｯﾄﾏｳﾝﾄ

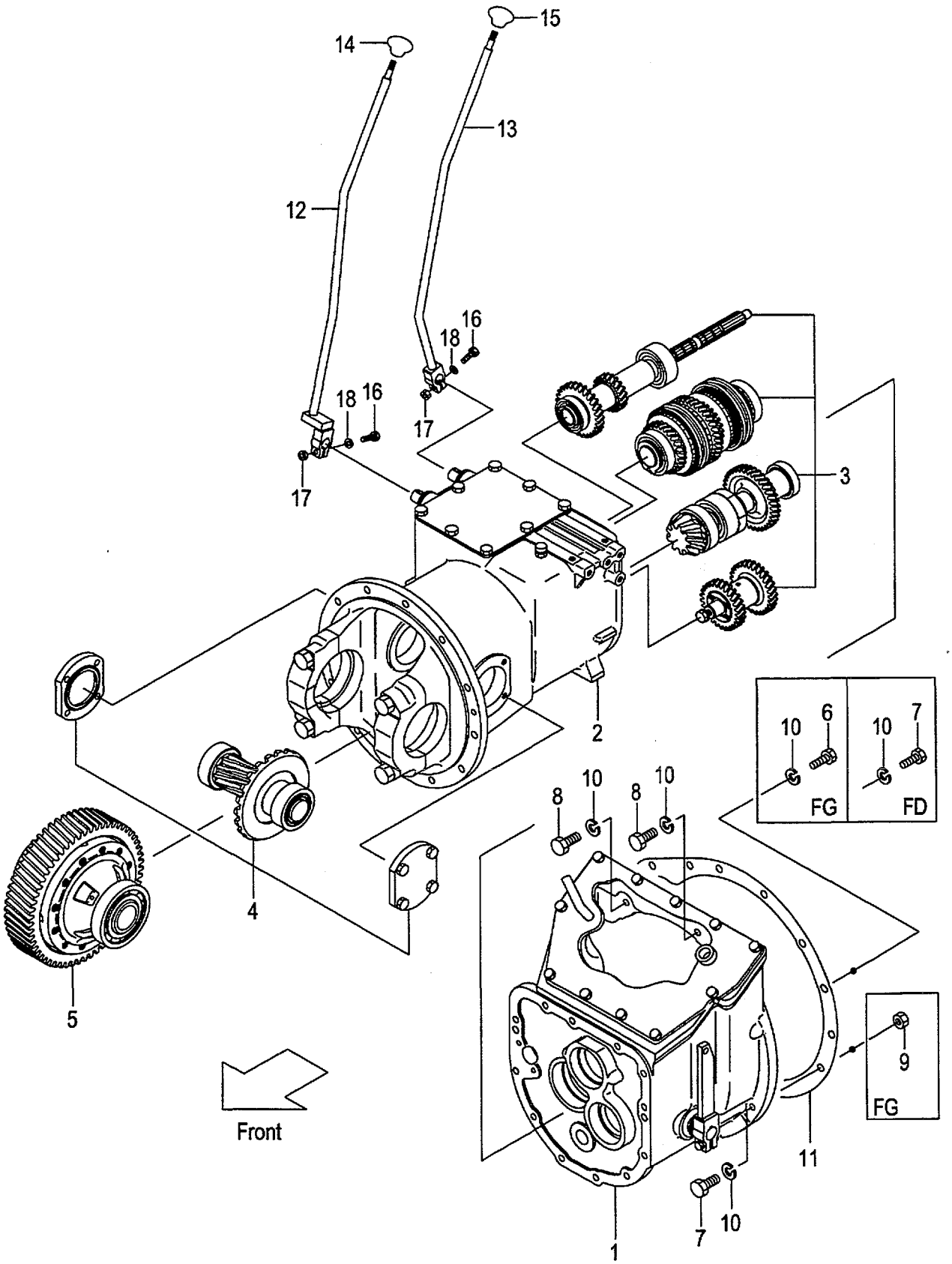

A:FG20W6H FG25W6H
B:FD20W6H FD25W6H

FIG.68
(F5H225J0)

Item No	Part No.	Mark	Description		Req'd	Remarks : Serial No.
A1	137H2-50001		UNIT-ASSY,DRIVE	ﾄﾞﾗｲﾌﾞﾕﾆｯﾄｱｯｾﾝ	1	A INC.1-5
-	139H2-50001		UNIT-ASSY,DRIVE	ﾄﾞﾗｲﾌﾞﾕﾆｯﾄｱｯｾﾝ	1	B INC.1-5
1	NO PART NO.		CLUTCH	ｸﾗｯﾁ	1	A SEE FIG.69
-	NO PART NO.		CLUTCH	ｸﾗｯﾁ	1	B SEE FIG.69
2	NO PART NO.		CASE,T/M	ｹｰｽ	1	SEE FIG.66
3	NO PART NO.		GEAR,T/M	ｷﾞﾔｰ	1	SEE FIG.67
4	NO PART NO.		REDUCTION	ﾘﾀﾞｸｼｮﾝ	1	SEE FIG.76
5	NO PART NO.		DIFFERENTIAL	ﾃﾞﾌｧﾚﾝｼｬﾙ	1	SEE FIG.77
6	01103-10040		BOLT	ﾎﾞﾙﾄ	1	A
7	01103-10050		BOLT	ﾎﾞﾙﾄ	5	A
-	01103-10035		BOLT	ﾎﾞﾙﾄ	6	B
8	01103-10035		BOLT	ﾎﾞﾙﾄ	2	A
-	01103-10030		BOLT	ﾎﾞﾙﾄ	2	B
9	01400-00010		NUT	ﾅｯﾄ	5	A
10	02011-00010		WASHER	ﾜｯｼｬ	8	
11	213L2-52001		GASKET	ｶﾞｽｹｯﾄ	1	
12	239A2-52001		LEVER,SPEED	ﾚﾊﾞｰ	1	
-	539A2-32001		LEVER,SPEED	ﾚﾊﾞｰ	1	[LCR]
13	239A2-52061		LEVER,DIRECTION	ﾚﾊﾞｰ	1	
-	539A2-32041		LEVER,DIRECTION	ﾚﾊﾞｰ	1	[LCR]
14	214A2-52002		KNOB,SPEED	ﾉﾌﾞ	1	
15	214A2-52012		KNOB,DIRECTION	ﾉﾌﾞ	1	
16	01183-08045		BOLT	ﾎﾞﾙﾄ	2	
17	01400-00008		NUT	ﾅｯﾄ	2	
18	02010-00008		WASHER	ﾜｯｼｬ	2	

FIG.69 CLUTCH (OIL CLUTCH)

(F5H225K0) クラッチ

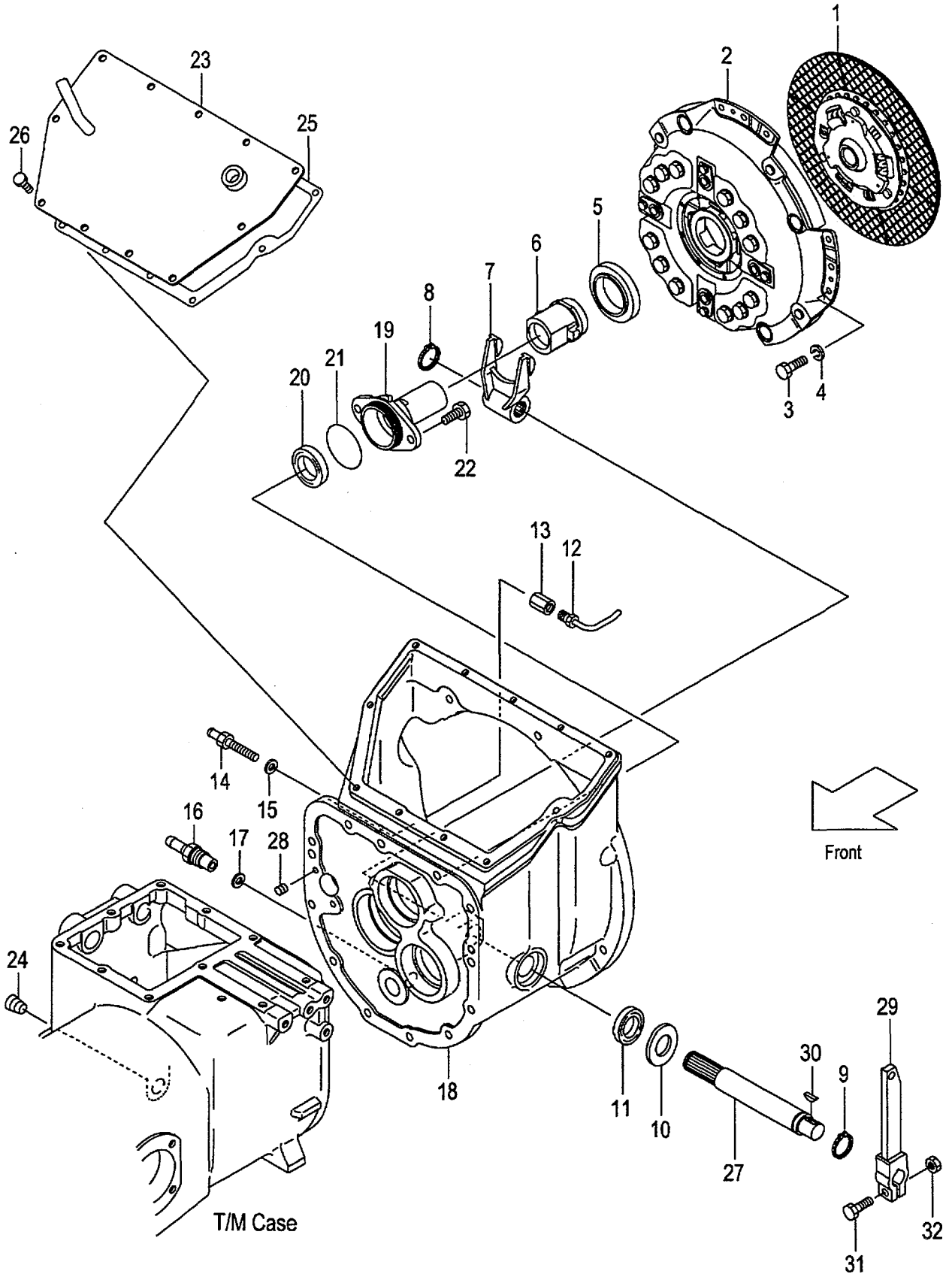

A:FG20W6H FG25W6H
B:FD20W6H FD25W6H

FIG.69
(F5H225K0)

Item No	Part No.	Mark	Description		Req'd	Remarks : Serial No.
1	134H3-10211		DISK,CLUTCH	ﾃﾞｨｽｸ	1	
2	134H3-10201		COVER,CLUTCH	ｶﾊﾞｰ	1	A
-	139H3-10301		COVER,CLUTCH	ｶﾊﾞｰ	1	B
3	01103-08016		BOLT	ﾎﾞﾙﾄ	12	
4	02011-00008		WASHER	ﾜｯｼｬ	12	
5	55593-62061		BRG,THRUST	ﾍﾞｱﾘﾝｸﾞ	1	
6	134H3-12022		RETAINER,BRG	ﾘﾃｰﾅ	1	
7	114A3-12012		YOKE	ﾖｰｸ	1	
8	02100-00025		RING,SNAP	ｽﾅｯﾌﾟﾘﾝｸﾞ	1	
9	02100-00028		RING,SNAP	ｽﾅｯﾌﾟﾘﾝｸﾞ	1	
10	02000-00027		WASHER	ﾜｯｼｬ	1	
11	19502-52551		SEAL,OIL	ｼｰﾙ	1	
12	131N3-12011		NOZZLE,SPRAY	ﾉｽﾞﾙ	1	
13	131N3-12031		ADAPTER	ｱﾀﾞﾌﾟﾀ	1	
14	131N3-12041		NIPPLE	ﾆｯﾌﾟﾙ	1	
15	15943-82701		WASHER	ﾜｯｼｬ	1	
16	131N3-12151		FITTING,HOSE	ﾌｨｯﾃｨﾝｸﾞ	1	
17	22197-52091		WASHER	ﾜｯｼｬ	1	
18	134H3-12001		HOUSING,CLUTCH	ﾊｳｼﾞﾝｸﾞ	1	
19	134A3-12021		SUPPORT,RETAINER	ｻﾎﾟｰﾄ	1	
20	134H3-12011		SEAL,OIL	ｼｰﾙ	1	
21	03310-00600		O-RING	Oﾘﾝｸﾞ	1	
22	01213-10025		BOLT	ﾎﾞﾙﾄ	2	
23	131N3-12101		COVER,CLUTCH-HOUSING	ｶﾊﾞｰ	1	
24	12163-82541		PLUG	ﾌﾟﾗｸﾞ	1	
25	524G3-62121		GASKET	ｶﾞｽｹｯﾄ	1	
26	01183-08016		BOLT	ﾎﾞﾙﾄ	11	
27	114L3-12022		SHAFT	ｼｬﾌﾄ	1	
28	01066-08008		PLUG	ﾌﾟﾗｸﾞ	2	
29	114L3-12031		ARM	ｱｰﾑ	1	
30	02360-05019		KEY	ｷｰ	1	
31	01183-08035		BOLT	ﾎﾞﾙﾄ	1	
32	01400-00008		NUT	ﾅｯﾄ	1	

FIG.70 DRIVE UNIT MOUNT (TOR-CON)

(F5H225A0) ﾄﾞﾗｲﾌﾞﾕﾆｯﾄﾏｳﾝﾄ

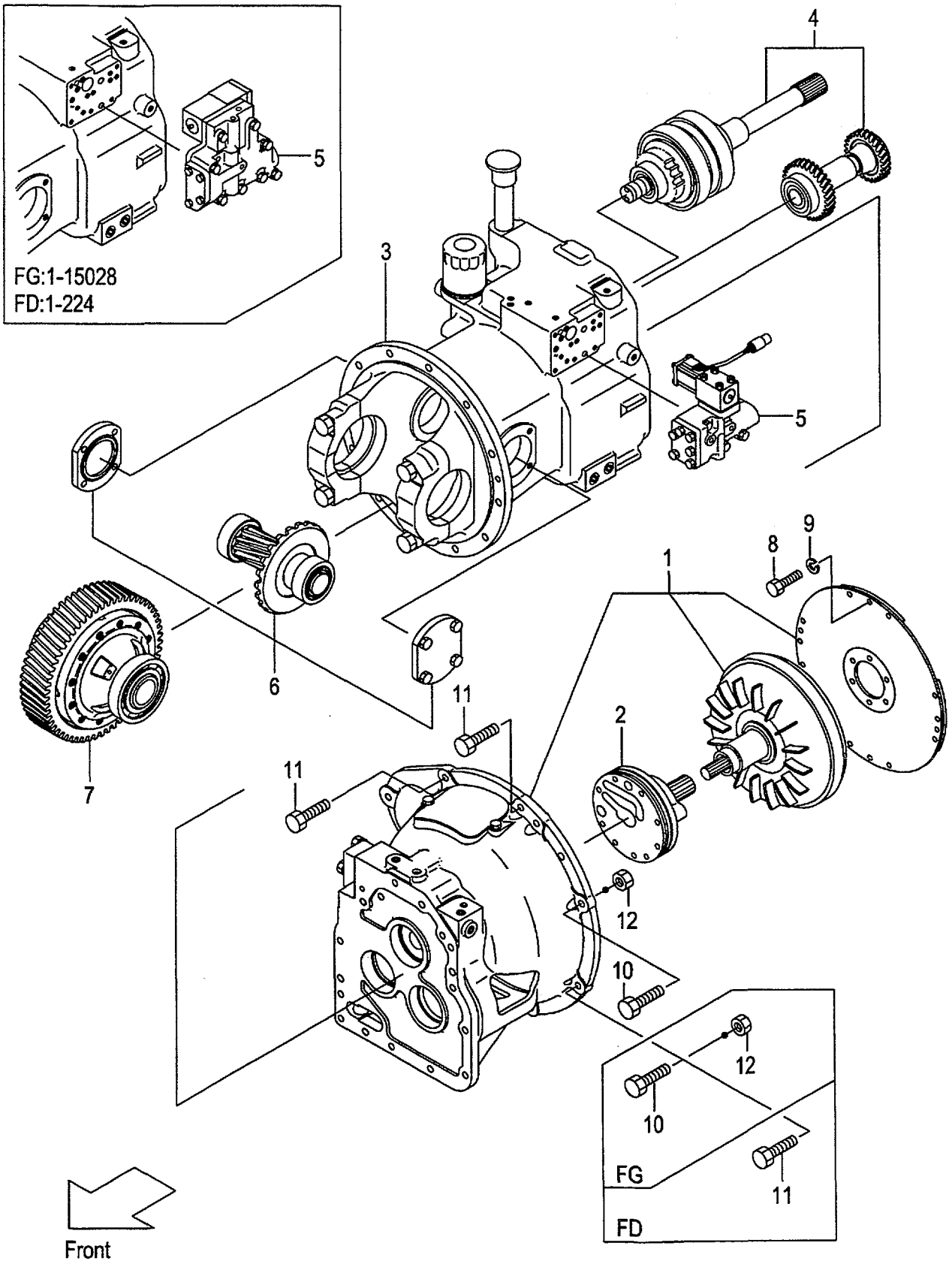

A:FG20T6H FG25T6H
B:FD20T6H FD25T6H

Item No	Part No.	Mark	Description		Req'd	Remarks : Serial No.
A1	137B2-50001		UNIT-ASSY,DRIVE	ﾄﾞﾗｲﾌﾞﾕﾆｯﾄｱｯｾﾝ	1	A:1-15028 INC.1-7
-	137B2-50002		UNIT-ASSY,DRIVE	ﾄﾞﾗｲﾌﾞﾕﾆｯﾄｱｯｾﾝ	1	A:15029- INC.1-7
-	534G8-30101		UNIT-ASSY,DRIVE	ﾄﾞﾗｲﾌﾞﾕﾆｯﾄｱｯｾﾝ	1	B:1-224 INC.1-7
-	534G8-30102		UNIT-ASSY,DRIVE	ﾄﾞﾗｲﾌﾞﾕﾆｯﾄｱｯｾﾝ	1	B:225- INC.1-7
-	537B3-80001		UNIT-ASSY,DRIVE	ﾄﾞﾗｲﾌﾞﾕﾆｯﾄｱｯｾﾝ	1	A:1-15028 [EXE][EXN] INC.1-7
-	537B3-80002		UNIT-ASSY,DRIVE	ﾄﾞﾗｲﾌﾞﾕﾆｯﾄｱｯｾﾝ	1	A:15029- [EXE][EXN] INC.1-7
-	534G3-80101		UNIT-ASSY,DRIVE	ﾄﾞﾗｲﾌﾞﾕﾆｯﾄｱｯｾﾝ	1	B:1-224 [EXE][EXN] INC.1-7
-	534G3-80102		UNIT-ASSY,DRIVE	ﾄﾞﾗｲﾌﾞﾕﾆｯﾄｱｯｾﾝ	1	B:225- [EXE][EXN] INC.1-7
-	537B4-50001		UNIT-ASSY,DRIVE	ﾄﾞﾗｲﾌﾞﾕﾆｯﾄｱｯｾﾝ	1	A:1-15028 [DNS] INC.1-7
-	537B4-50002		UNIT-ASSY,DRIVE	ﾄﾞﾗｲﾌﾞﾕﾆｯﾄｱｯｾﾝ	1	A:15029- [DNS] INC.1-7
-	539B4-50001		UNIT-ASSY,DRIVE	ﾄﾞﾗｲﾌﾞﾕﾆｯﾄｱｯｾﾝ	1	B:1-224 [DNS] INC.1-7
-	539B4-50002		UNIT-ASSY,DRIVE	ﾄﾞﾗｲﾌﾞﾕﾆｯﾄｱｯｾﾝ	1	B:225- [DNS] INC.1-7
1	NO PART NO.		CASE,T/C	ｹｰｽ	1	A SEE FIG.71
-	NO PART NO.		CASE,T/C	ｹｰｽ	1	B SEE FIG.71
2	NO PART NO.		PUMP	ﾎﾟﾝﾌﾟ	1	SEE FIG.72
3	NO PART NO.		CASE,T/M	ｹｰｽ	1	SEE FIG.73
-	NO PART NO.		CASE,T/M	ｹｰｽ	1	[EXE][EXN]SEE FIG.73
4	NO PART NO.		PACK,CLUTCH	ﾊﾟｯｸ	1	SEE FIG.74
5	NO PART NO.		VALVE	ﾊﾞﾙﾌﾞ	1	A:1-15028 B:1-224 SEE FIG.75
-	NO PART NO.		VALVE	ﾊﾞﾙﾌﾞ	1	A:15029- B:225- SEE FIG.75A
6	NO PART NO.		REDUCTION	ﾘﾀﾞｸｼｮﾝ	1	SEE FIG.76
7	NO PART NO.		DIFFERENTIAL	ﾃﾞﾌｧﾚﾝｼｬﾙ	1	SEE FIG.77
-	NO PART NO.		DIFFERENTIAL	ﾃﾞﾌｧﾚﾝｼｬﾙ	1	[DNS]SEE FIG.77
8	01103-10016		BOLT	ﾎﾞﾙﾄ	8	A
-	01103-08020		BOLT	ﾎﾞﾙﾄ	12	B
9	02011-00010		WASHER	ﾜｯｼｬ	8	A
-	02011-00008		WASHER	ﾜｯｼｬ	12	B
10	01184-10050		BOLT	ﾎﾞﾙﾄ	6	A
-	01184-10050		BOLT	ﾎﾞﾙﾄ	1	B
11	01184-10035		BOLT	ﾎﾞﾙﾄ	2	A
-	01184-10030		BOLT	ﾎﾞﾙﾄ	7	B
12	01400-00010		NUT	ﾅｯﾄ	6	A

FIG.70 DRIVE UNIT MOUNT (TOR-CON)

(F5H225A0) ﾄﾞﾗｲﾌﾞﾕﾆｯﾄﾏｳﾝﾄ

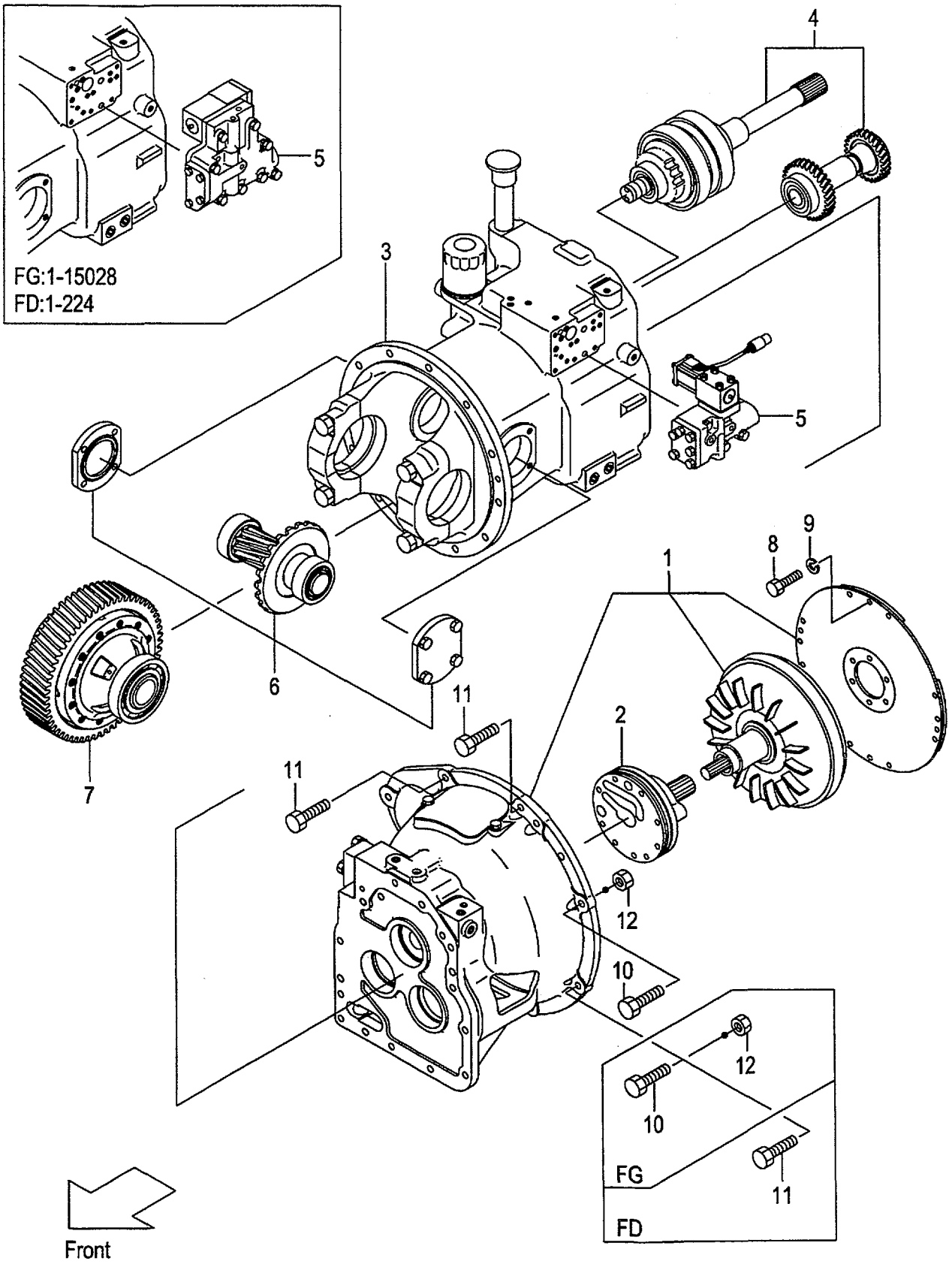

FIG.70
(F5H225A0)

A:FG20T6H FG25T6H
B:FD20T6H FD25T6H

Item No	Part No.	Mark	Description	Req'd	Remarks : Serial No.
-	01400-00010		NUT ﾅｯﾄ	1	B

FIG.71 TORQUE CONVERTER CASE (TOR-CON)

(F5H225B0) トルクコンバータケース

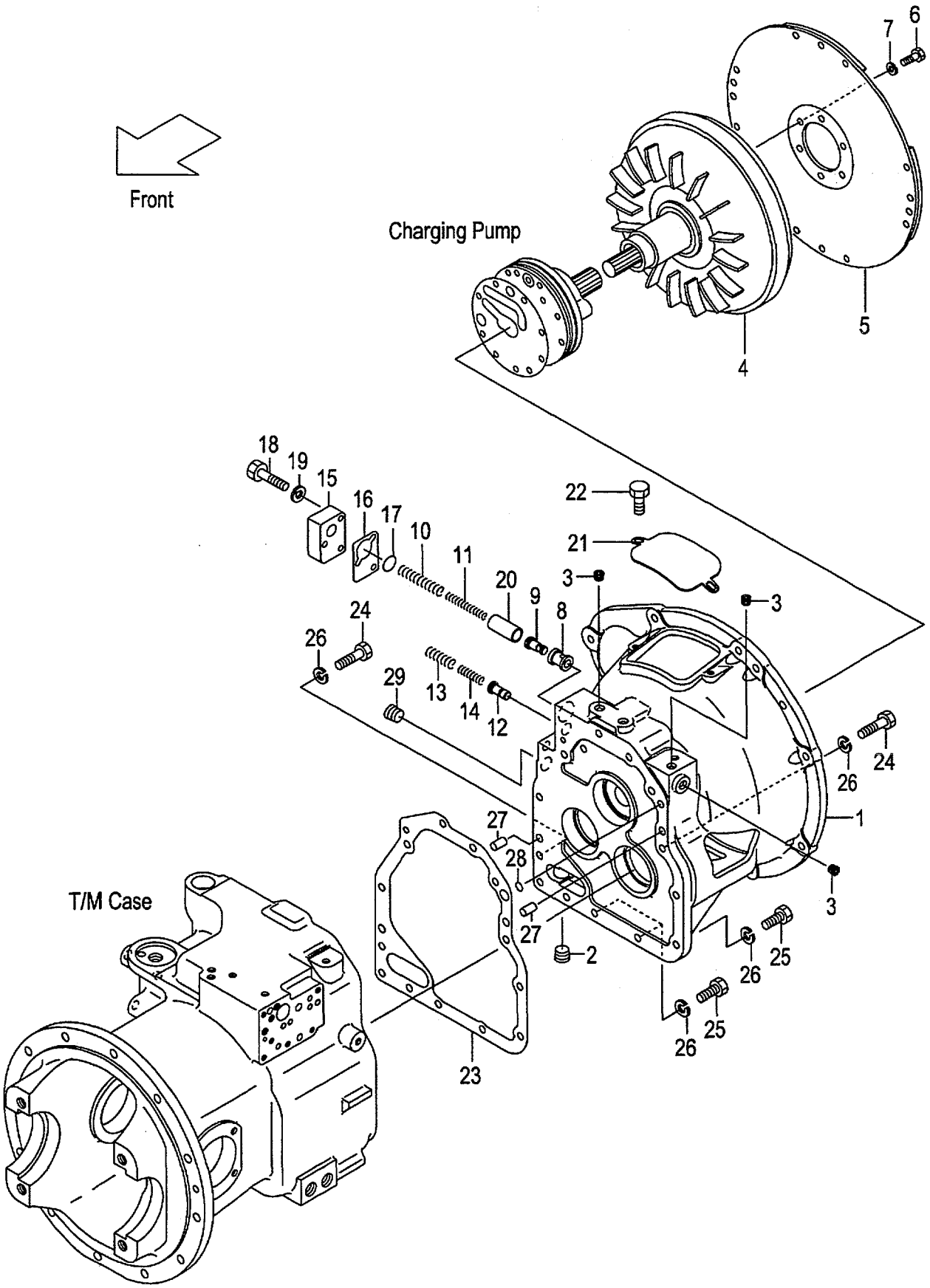

A:FG20T6H FG25T6H
B:FD20T6H FD25T6H

FIG.71
(F5H225B0)

Item No	Part No.	Mark	Description		Req'd	Remarks : Serial No.
1	134B3-82001		CASE,TOR-CON	ｹｰｽ	1	
2	27397-52101		PLUG	ﾌﾟﾗｸﾞ	1	
3	116H3-82101		PLUG	ﾌﾟﾗｸﾞ	4	
4	137B3-80201		TORQUE-CONVERTER	ﾄﾙｸｺﾝﾊﾞｰﾀ	1	A
-	134G3-80301		TORQUE-CONVERTER	ﾄﾙｸｺﾝﾊﾞｰﾀ	1	B
5	137B3-80211		PLATE,INPUT	ﾌﾟﾚｰﾄ	1	A
-	13683-82022		PLATE,INPUT	ﾌﾟﾚｰﾄ	1	B
6	12163-82621		BOLT	ﾎﾞﾙﾄ	6	
7	02003-20010		WASHER	ﾜｯｼｬ	6	
8	134B3-82281		SLEEVE	ｽﾘｰﾌﾞ	1	
9	134B3-82301		PISTON	ﾋﾟｽﾄﾝ	1	
10	134B3-82021		SPRING	ｽﾌﾟﾘﾝｸﾞ	1	
11	134B3-82031		SPRING	ｽﾌﾟﾘﾝｸﾞ	1	
12	134B3-82011		PISTON	ﾋﾟｽﾄﾝ	1	
13	134B3-82311		SPRING	ｽﾌﾟﾘﾝｸﾞ	1	
14	134B3-82321		SPRING	ｽﾌﾟﾘﾝｸﾞ	1	
15	134B3-82041		COVER	ｶﾊﾞｰ	1	
16	134B3-82051		GASKET	ｶﾞｽｹｯﾄ	1	
17	15583-82541		O-RING	Oﾘﾝｸﾞ	1	
18	01103-08040		BOLT	ﾎﾞﾙﾄ	3	
19	02011-00008		WASHER	ﾜｯｼｬ	3	
20	134B3-82291		COLLAR	ｶﾗｰ	1	
21	131M2-52001		COVER	ｶﾊﾞｰ	1	
22	01185-08020		BOLT	ﾎﾞﾙﾄ	2	
23	134B3-82101	*	GASKET	ｶﾞｽｹｯﾄ	1	
24	01103-10065		BOLT	ﾎﾞﾙﾄ	10	
25	01103-10030		BOLT	ﾎﾞﾙﾄ	3	
26	02011-00010		WASHER	ﾜｯｼｬ	13	
27	02212-12020		PIN,PARALLEL	ﾋﾟﾝ	2	
28	15583-82521	*	O-RING	Oﾘﾝｸﾞ	1	
29	12163-82541		PLUG	ﾌﾟﾗｸﾞ	1	
K1	134B3-89821		KIT,REPAIR,D/U	ﾘﾍﾟｱｷｯﾄ	1	INC.23,28 & OTHERS

FIG.72 CHARGING PUMP (TOR-CON)

(F5H225C0) ﾁｬｰｼﾞﾝｸﾞﾎﾟﾝﾌﾟ

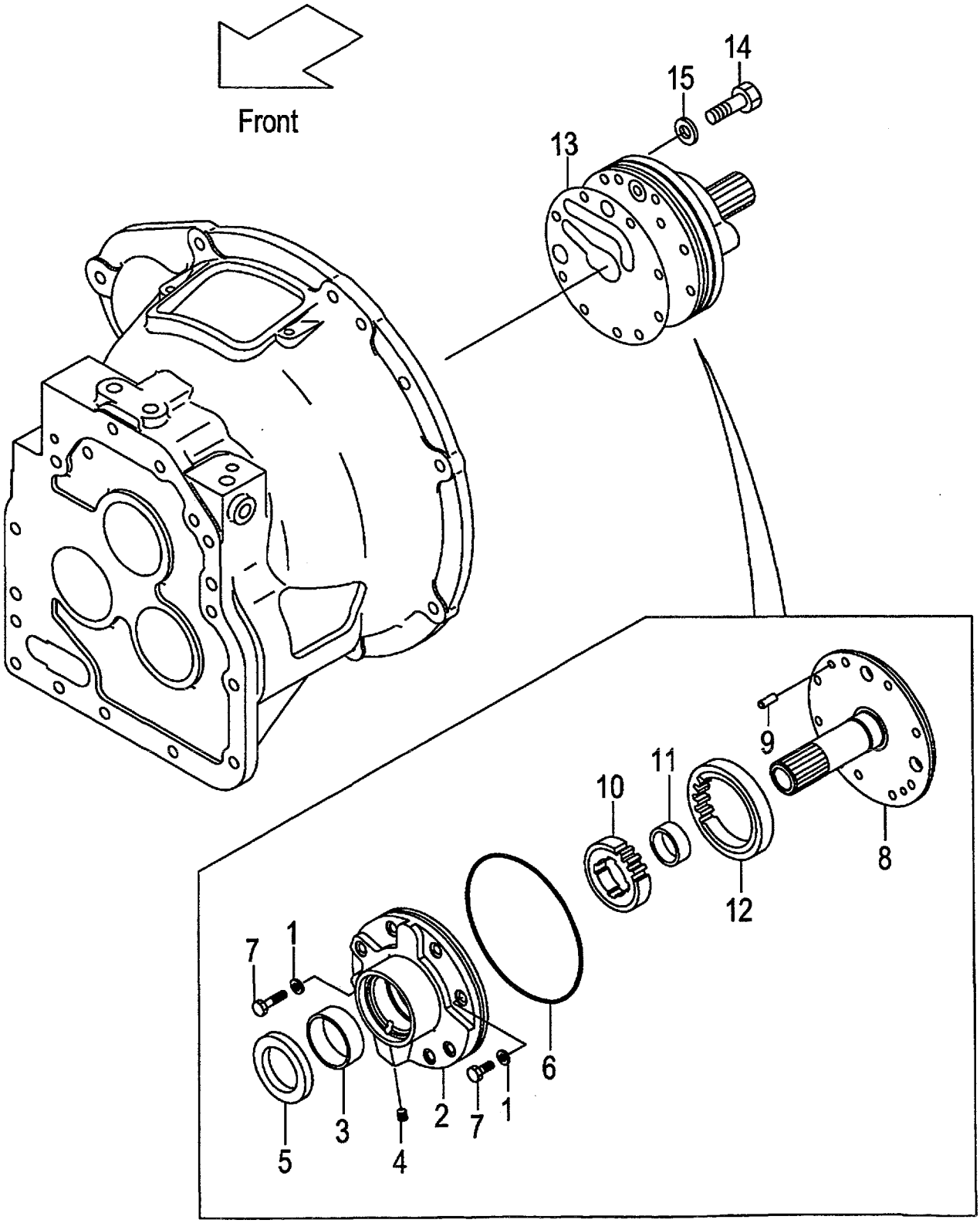

A:FG20T6H FG25T6H
B:FD20T6H FD25T6H

FIG.72
(F5H225C0)

Item No	Part No.	Mark	Description		Req'd	Remarks : Serial No.
A1	134G3-80401		PUMP-ASSY,CHARGING	チャージングポンプアッセン	1	INC.1-12
1	12163-82561	*	PACKING	パッキング	2	
A2	15583-82141		CASE-ASSY,PUMP	ポンプケースアッセン	1	INC.2-4
2	NO PART NO.	#*	CASE,PUMP	ケース	1	
3	15583-82161		BUSHING	ブッシング	1	
4	23870-52821		PLUG	プラグ	1	
5	15583-82172	*	SEAL,OIL	シール	1	
6	15583-82181	*	O-RING	Oリング	1	
7	01103-08035		BOLT	ボルト	2	
8	134G3-82001	*	SUPPORT,STARTER	サポート	1	
9	02212-06016		PIN,PARALLEL	ピン	2	
A3	15583-82211		GEAR-ASSY	ギヤーアッセン	1	INC.10-12
10	NO PART NO.	#*	GEAR,DRIVE	ギヤー	1	
11	15583-82241	*	BUSHING	ブッシング	1	
12	NO PART NO.	#*	GEAR,DRIVEN	ギヤー	1	
13	134B3-82091	*	GASKET	ガスケット	1	
14	01103-08045		BOLT	ボルト	6	
15	12163-82561	*	PACKING	パッキング	6	
K1	134B3-89861		KIT,REPAIR,PUMP	リペアキット	1	INC.1,5,6,13,15
K2	134G3-89851		KIT,BODY,PUMP	ボディーキット	1	INC.2,8,10-12

FIG.73 MISSION CASE (TOR-CON)

(F5H225D0) ミッションケース

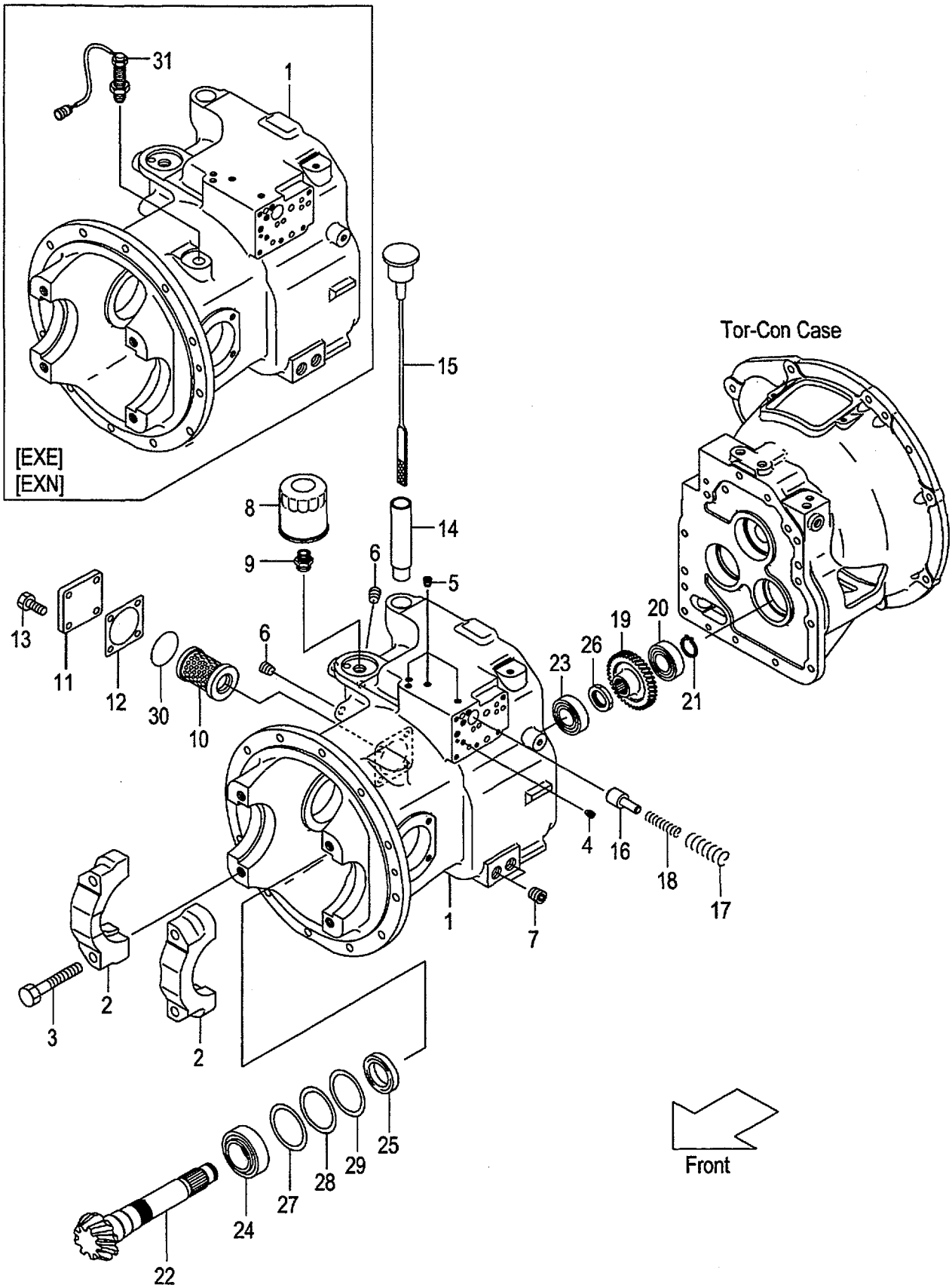

A:FG20T6H FG25T6H
B:FD20T6H FD25T6H

FIG.73
(F5H225D0)

Item No	Part No.	Mark	Description		Req'd	Remarks : Serial No.
A1	134B3-80281		CASE-ASSY,T/M	トランスミッションケースアッセン	1	INC.1,2
-	534B3-80281		CASE-ASSY,T/M	トランスミッションケースアッセン	1	[EXE][EXN] INC.1,2
1	NO PART NO.	#	CASE,T/M	ケース	1	
-	NO PART NO.	#	CASE,T/M	ケース	1	[EXE][EXN]
2	134A3-42011		CAP,BRG	キャップ	2	
3	134A3-42221		BOLT	ボルト	4	
4	115G3-82671		PLUG,CHOKE	プラグ	1	
5	116H3-82201		PLUG	プラグ	4	
6	116H3-82101		PLUG	プラグ	2	
7	12163-82541		PLUG	プラグ	2	
8	115G3-82241		FILTER,OIL	フィルタ	1	
9	115G3-82251		NIPPLE	ニップル	1	
10	124U3-82521		STRAINER,SUCTION	ストレーナ	1	
11	124U3-82081		COVER,PLATE	カバー	1	
12	124U3-82091	*	GASKET	ガスケット	1	
13	01184-10025		BOLT	ボルト	4	
14	12163-82221		PIPE,OIL-FILL	パイプ	1	
15	12163-82232		CAP,OIL-FILL	キャップ	1	
16	15583-82441		SPOOL,ACC	スプール	1	
17	15583-82451		SPRING	スプリング	1	
18	15583-82461		SPRING	スプリング	1	
19	115G3-82451		GEAR,OUTPUT	ギヤー	1	
20	03000-06306		BRG,BALL	ベアリング	1	
21	02100-00030	*	RING,SNAP	スナップリング	1	
22	134B3-82141		SHAFT,OUTPUT	シャフト	1	
23	12003-43031		BRG,TAPER-ROLLER	ベアリング	1	
24	115G3-82641		BRG,TAPER-ROLLER	ベアリング	1	
25	115G3-82651	*	SEAL,OIL	シール	1	
26	115G3-82471	*	NUT	ナット	1	
27	12003-42311	*	SHIM,T-0.5	シム	1	
28	12003-42321	*	SHIM,T-0.2	シム	2	
29	12003-42331	*	SHIM,T-0.1	シム	1	
30	115G3-82111		O-RING	Oリング	1	
31	16402-54331		SENSOR	センサ	1	[EXE][EXN]
K1	134B3-89821		KIT,REPAIR,D/U	リペアキット	1	INC.12,21,25-29& OTHERS

FIG.74 CLUTCH PACK (TOR-CON)

(F5H225E0) クラッチパック

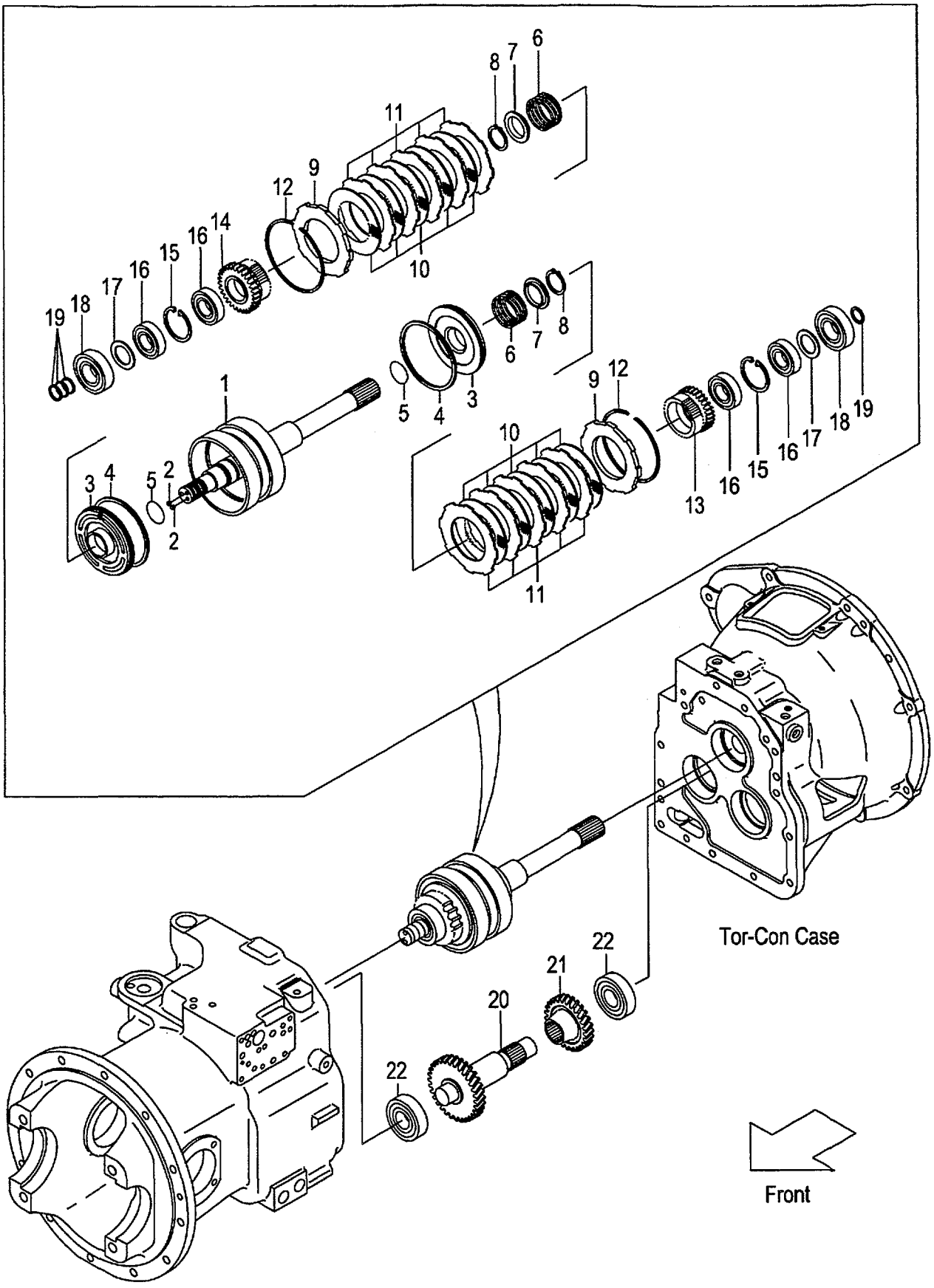

A:FG20T6H FG25T6H
B:FD20T6H FD25T6H

FIG.74
(F5H225E0)

Item No	Part No.	Mark	Description		Req'd	Remarks : Serial No.
A1	134G3-80201		CLUTCH-ASSY,HYDRO	ｸﾗｯﾁｱｯｾﾝ	1	INC.1-19
A2	134G3-80251		SUB-ASSY,HYD-CLUTCH	ｸﾗｯﾁｻﾌﾞｱｯｾﾝ	1	INC.1-12
1	134G3-82101		SHAFT,INPUT	ｼｬﾌﾄ	1	INC.2
2	01066-08008		PLUG	ﾌﾟﾗｸﾞ	2	
3	134G3-82111		PISTON	ﾋﾟｽﾄﾝ	2	
4	134G3-82141	*	RING,SEAL	ﾘﾝｸﾞ	2	
5	11243-82211	*	O-RING	Oﾘﾝｸﾞ	2	
6	11243-82081		SPRING,RETURN,CLUTCH	ｽﾌﾟﾘﾝｸﾞ	2	
7	11243-82091	*	SHEET,SPRING	ｼｰﾄ	2	
8	02100-00040	*	RING,SNAP	ｽﾅｯﾌﾟﾘﾝｸﾞ	2	
9	134G3-82131		END,CLUTCH	ｴﾝﾄﾞ	2	
10	134B3-82401	*	PLATE,FRICTION	ﾌﾟﾚｰﾄ	10	
11	134G3-82121	*	PLATE,MATING	ﾌﾟﾚｰﾄ	10	
12	11243-82181	*	RING,SNAP	ｽﾅｯﾌﾟﾘﾝｸﾞ	2	
13	115G3-82331		GEAR,FORWARD	ｷﾞﾔｰ	1	
14	115G3-82341		GEAR,REVERSE	ｷﾞﾔｰ	1	
15	02121-00058		RING,SNAP	ｽﾅｯﾌﾟﾘﾝｸﾞ	2	
16	115G3-82351		BRG,BALL	ﾍﾞｱﾘﾝｸﾞ	4	
17	115G3-82361		PLATE,THRUST	ﾌﾟﾚｰﾄ	2	
18	03000-06306		BRG,BALL	ﾍﾞｱﾘﾝｸﾞ	2	
19	11243-82161	*	RING,SEAL	ﾘﾝｸﾞ	4	
20	115G3-82401		SHAFT,IDLER	ｼｬﾌﾄ	1	
21	115G3-82411		GEAR,IDLER	ｷﾞﾔｰ	1	
22	03000-06306		BRG,BALL	ﾍﾞｱﾘﾝｸﾞ	2	
K1	134G3-89811		KIT,REPAIR,CLUTCH	ﾘﾍﾟｱｷｯﾄ	1	INC.4,5,7,8,12,19
K2	134G3-89831		KIT,REPAIR,DISK	ﾘﾍﾟｱｷｯﾄ	1	INC.10,11

FIG.75 CONTROL VALVE (TOR-CON)

(F5H225F0) コントロールバルブ

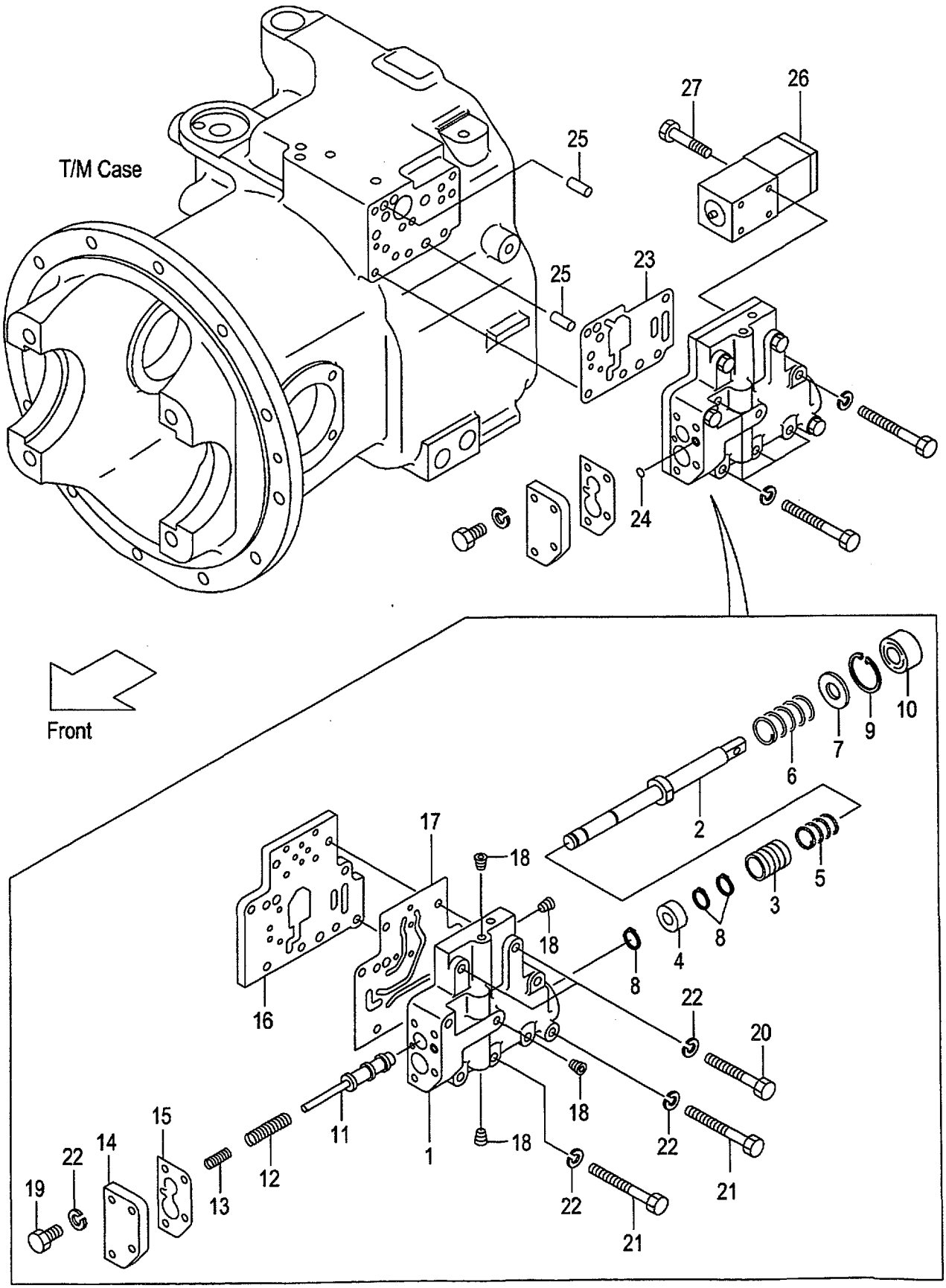

A:FG20T6H FG25T6H:1-15028
B:FD20T6H FD25T6H:1-224

FIG.75
(F5H225F0)

Item No	Part No.	Mark	Description		Req'd	Remarks : Serial No.
A1	534B8-30201		VALVE-ASSY,CONTROL	ｺﾝﾄﾛｰﾙﾊﾞﾙﾌﾞｱｯｾﾝ	1	INC.1-22
1	NO PART NO.	#	BODY,VALVE	ﾎﾞﾃﾞｨ	1	
2	115G3-82512		SPOOL,INCHING	ｽﾌﾟｰﾙ	1	
3	15793-82321		PLUNGER	ﾌﾟﾗﾝｼﾞｬ	1	
4	115G3-82522		PISTON	ﾋﾟｽﾄﾝ	1	
5	15793-82341		SPRING	ｽﾌﾟﾘﾝｸﾞ	1	
6	115G3-82491		SPRING	ｽﾌﾟﾘﾝｸﾞ	1	
7	15943-82651		SPACER	ｽﾍﾟｰｻ	1	
8	02100-00012		RING,SNAP	ｽﾅｯﾌﾟﾘﾝｸﾞ	3	
9	02110-00030		RING,SNAP	ｽﾅｯﾌﾟﾘﾝｸﾞ	1	
10	15943-82661		SEAL,OIL	ｼｰﾙ	1	
11	15943-82731		SPOOL,MODULATE	ｽﾌﾟｰﾙ	1	
12	15943-82741		SPRING	ｽﾌﾟﾘﾝｸﾞ	1	
13	15943-82751		SPRING	ｽﾌﾟﾘﾝｸﾞ	1	
14	534B8-32011		PLATE,VALVE,A	ﾌﾟﾚｰﾄ	1	
15	534B8-32031		GASKET,A	ｶﾞｽｹｯﾄ	1	
16	534B8-32021		PLATE,VALVE,B	ﾌﾟﾚｰﾄ	1	
17	534B8-32041		GASKET,B	ｶﾞｽｹｯﾄ	1	
18	116H3-82201		PLUG	ﾌﾟﾗｸﾞ	4	
19	01103-08025		BOLT	ﾎﾞﾙﾄ	4	
20	01103-08045		BOLT	ﾎﾞﾙﾄ	2	
21	01103-08060		BOLT	ﾎﾞﾙﾄ	7	
22	02011-00008		WASHER	ﾜｯｼｬ	13	
23	534B8-32051		GASKET,C	ｶﾞｽｹｯﾄ	1	
24	15583-82571		O-RING	Oﾘﾝｸﾞ	1	
25	02212-10025		PIN,PARALLEL	ﾋﾟﾝ	2	
26	135L3-82001		VALVE,SOLENOID	ﾊﾞﾙﾌﾞ	1	
27	01170-05045		BOLT	ﾎﾞﾙﾄ	4	

FIG.75A CONTROL VALVE (TOR-CON)

(F5H225F1) コントロールバルブ

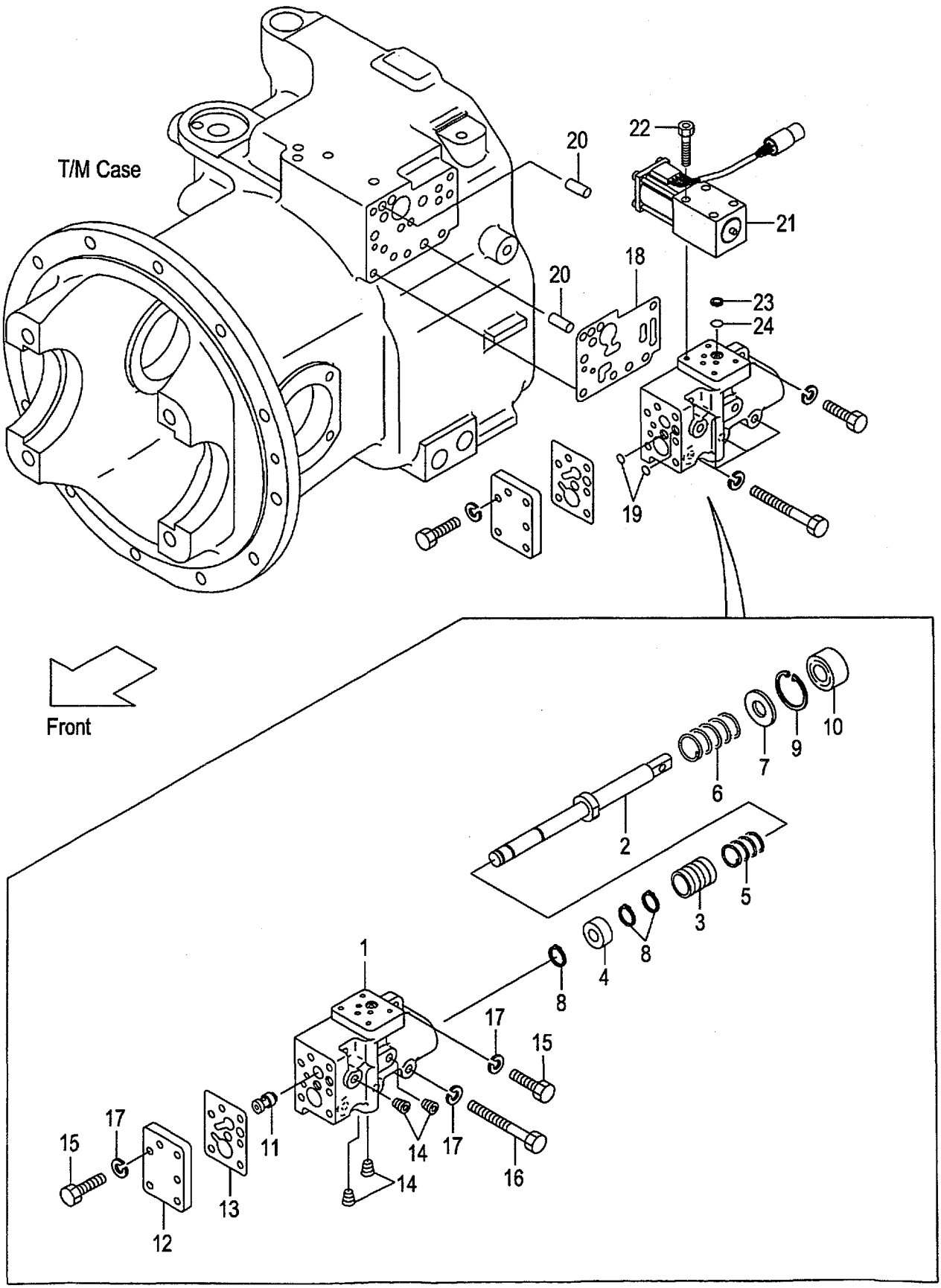

A:FG20T6H FG25T6H:15029-
B:FD20T6H FD25T6H:225-

FIG.75A
(F5H225F1)

Item No	Part No.	Mark	Description		Req'd	Remarks : Serial No.
A1	139B3-80201		VALVE-ASSY,CONTROL	ｺﾝﾄﾛｰﾙﾊﾞﾙﾌﾞｱｯｾﾝ	1	INC.1-17
1	NO PART NO.	#*	BODY,VALVE	ﾎﾞﾃﾞｨ	1	
2	115G3-82512	*	SPOOL,INCHING	ｽﾌﾟｰﾙ	1	
3	15793-82321	*	PLUNGER	ﾌﾟﾗﾝｼﾞｬ	1	
4	115G3-82522	*	PISTON	ﾋﾟｽﾄﾝ	1	
5	15793-82341		SPRING	ｽﾌﾟﾘﾝｸﾞ	1	
6	115G3-82491		SPRING	ｽﾌﾟﾘﾝｸﾞ	1	
7	15943-82651		SPACER	ｽﾍﾟｰｻ	1	
8	02100-00012	*	RING,SNAP	ｽﾅｯﾌﾟﾘﾝｸﾞ	3	
9	02110-00030	*	RING,SNAP	ｽﾅｯﾌﾟﾘﾝｸﾞ	1	
10	15943-82661	*	SEAL,OIL	ｼｰﾙ	1	
11	139B3-82121	*	SPOOL	ｽﾌﾟｰﾙ	1	
12	139B3-82111		COVER,VALVE	ｶﾊﾞｰ	1	
13	139B3-82131	*	GASKET,COVER	ｶﾞｽｹｯﾄ	1	
14	116H3-82201		PLUG	ﾌﾟﾗｸﾞ	4	
15	01103-08025		BOLT	ﾎﾞﾙﾄ	7	
16	01103-08060		BOLT	ﾎﾞﾙﾄ	4	
17	02011-00008		WASHER	ﾜｯｼｬ	11	
18	139B3-82141	*	GASKET	ｶﾞｽｹｯﾄ	1	
19	15583-82571	*	O-RING	Oﾘﾝｸﾞ	2	
20	02212-10025		PIN,PARALLEL	ﾋﾟﾝ	2	
21	135L3-82001		VALVE,SOLENOID	ﾊﾞﾙﾌﾞ	1	
22	01170-05045		BOLT	ﾎﾞﾙﾄ	4	
23	139B3-82161	*	FILTER,COIN	ﾌｨﾙﾀ	1	
24	139B3-82151	*	O-RING	Oﾘﾝｸﾞ	1	
K1	139B3-89801		KIT,REPAIR,VALVE	ﾘﾍﾟｱｷｯﾄ	1	INC.8-10,13,18,19,23,24
K2	139B3-89811		KIT,BODY,VALVE	ﾎﾞﾃﾞｨｰｷｯﾄ	1	INC.1-4,11

FIG.76 REDUCTION

(F5H225G0) ﾘﾀﾞｸｼｮﾝ

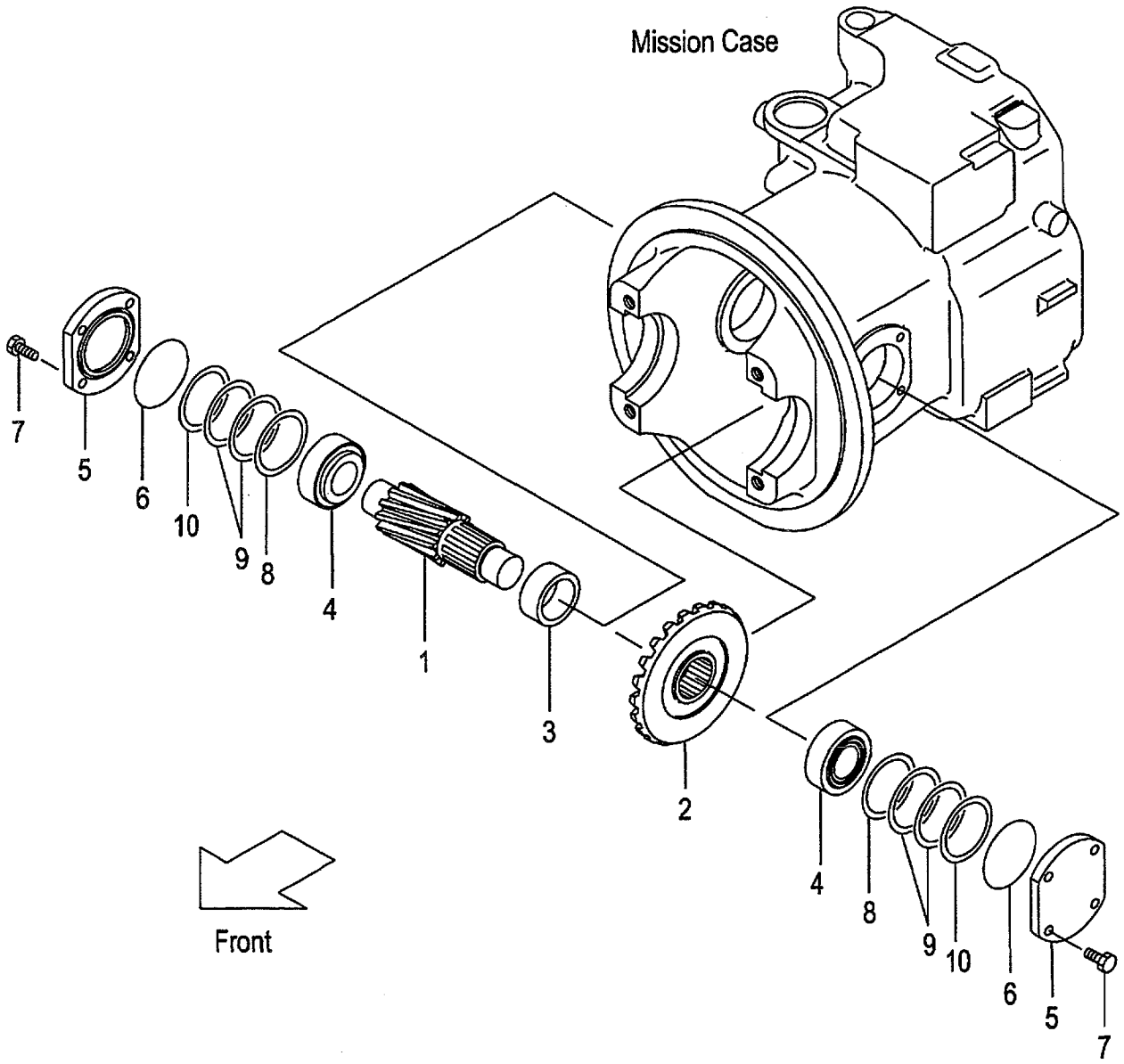

A:FG20C6H FG25C6H D:FD20C6H FD25C6H
B:FG20T6H FG25T6H E:FD20T6H FD25T6H
C:FG20W6H FG25W6H F:FD20W6H FD25W6H

FIG.76
(F5H225G0)

Item No	Part No.	Mark	Description		Req'd	Remarks : Serial No.
1	134A3-22001		SHAFT,FINAL-PINION	ｼｬﾌﾄ	1	
2	134A3-22011		GEAR,SPIRAL-BEVEL	ｷﾞﾔｰ	1	
3	134A3-22021		SPACER	ｽﾍﾟｰｻ	1	
4	134A3-22031		BRG,TAPER-ROLLER	ﾍﾞｱﾘﾝｸﾞ	2	
5	134A3-22041		COVER,BRG	ｶﾊﾞｰ	2	
6	03310-00800	*	O-RING	Oﾘﾝｸﾞ	2	
7	01184-10025		BOLT	ﾎﾞﾙﾄ	8	
8	12003-42311	*	SHIM,T-0.5	ｼﾑ	2	
9	12003-42321	*	SHIM,T-0.2	ｼﾑ	4	
10	12003-42331	*	SHIM,T-0.1	ｼﾑ	2	
K1	134A3-48911		KIT,REPAIR,T/M	ﾘﾍﾟｱｷｯﾄ	1	A,D
						INC.6,8-10 & OTHERS

FIG.77 DIFFERENTIAL

(F5H225H0) ﾃﾞｨﾌｧﾚﾝｼｬﾙ

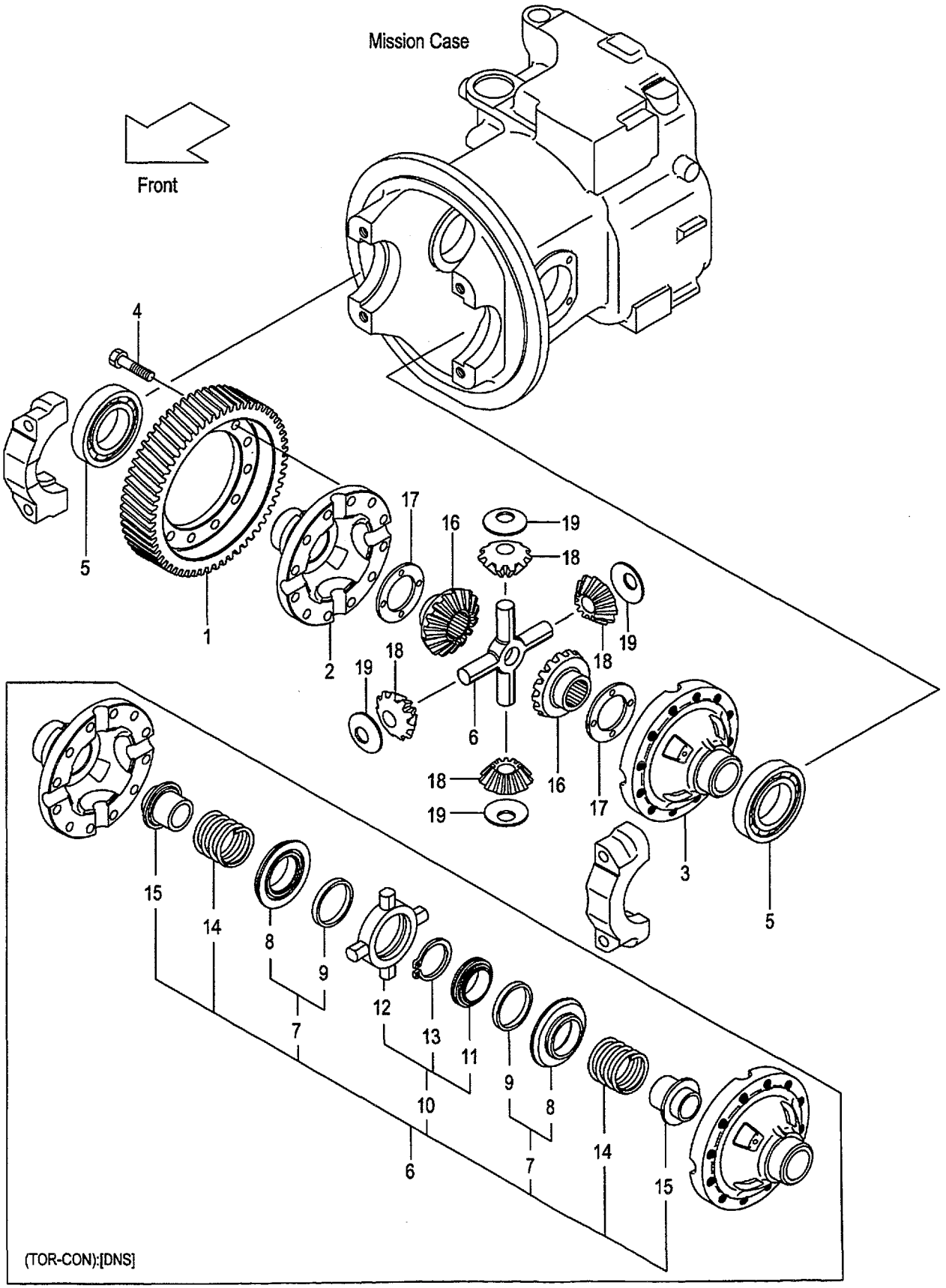

A:FG20C6H FG20T6H FG25C6H FG25T6H FG20W6H FG25W6H
B:FD20C6H FD20T6H FD25C6H FD25T6H FD20W6H FD25W6H

Item No	Part No.	Mark	Description		Req'd	Remarks : Serial No.
1	134A3-52001		GEAR,RING	ｷﾞﾔｰ	1	
A1	134A3-59801		CASE-ASSY,CROSS	ｸﾛｽｹｰｽｱｯｾﾝ	1	INC.2,3
2	NO PART NO.	#	CASE,CROSS,RH	ｹｰｽ	1	
3	NO PART NO.	#	CASE,CROSS,LH	ｹｰｽ	1	
4	134A3-52061		BOLT	ﾎﾞﾙﾄ	12	
5	03000-06213		BRG,BALL	ﾍﾞｱﾘﾝｸﾞ	2	
6	124G3-52011		SPIDER	ｽﾊﾟｲﾀﾞ	1	
-	79562-61202		NOSPIN	ﾉｰｽﾋﾟﾝ	1	B [DNS] INC.7-15
7	NO PART NO.	#	CLUTCH,DRIVEN	ｸﾗｯﾁ	2	B [DNS] INC.8,9
8	NO PART NO.	#	CLUTCH,DRIVEN	ｸﾗｯﾁ	2	B [DNS]
9	NO PART NO.	#	RING,HOLDOUT	ﾘﾝｸﾞ	2	B [DNS]
10	78658-42012		SPIDER	ｽﾊﾟｲﾀﾞ	1	B [DNS] INC.11-13
11	NO PART NO.	#	CAM,CENTER	ｶﾑ	1	B [DNS]
12	NO PART NO.	#	SPIDER	ｽﾊﾟｲﾀﾞ	1	B [DNS]
13	NO PART NO.	#	RING,SNAP	ｽﾅｯﾌﾟﾘﾝｸﾞ	1	B [DNS]
14	78470-98028		SPRING	ｽﾌﾟﾘﾝｸﾞ	2	B [DNS]
15	79562-61203		GEAR,SIDE	ｷﾞﾔｰ	2	B [DNS]
16	134A3-52041		GEAR,SIDE	ｷﾞﾔｰ	2	(WITHOUT DNS)
17	16113-52141		WASHER,THRUST,T-2.36	ﾜｯｼｬ	2	(WITHOUT DNS)
-	14453-52071		WASHER,THRUST,T-2.2	ﾜｯｼｬ	(2)	(WITHOUT DNS)
-	14453-52081		WASHER,THRUST,T-2.5	ﾜｯｼｬ	(2)	(WITHOUT DNS)
18	134A3-52051		GEAR,PINION	ｷﾞﾔｰ	4	(WITHOUT DNS)
19	16113-52121		WASHER,THRUST	ﾜｯｼｬ	4	(WITHOUT DNS)

FIG.78 DRIVE AXLE

(F5H23010) ﾄﾞﾗｲﾌﾞｱｸｽﾙ

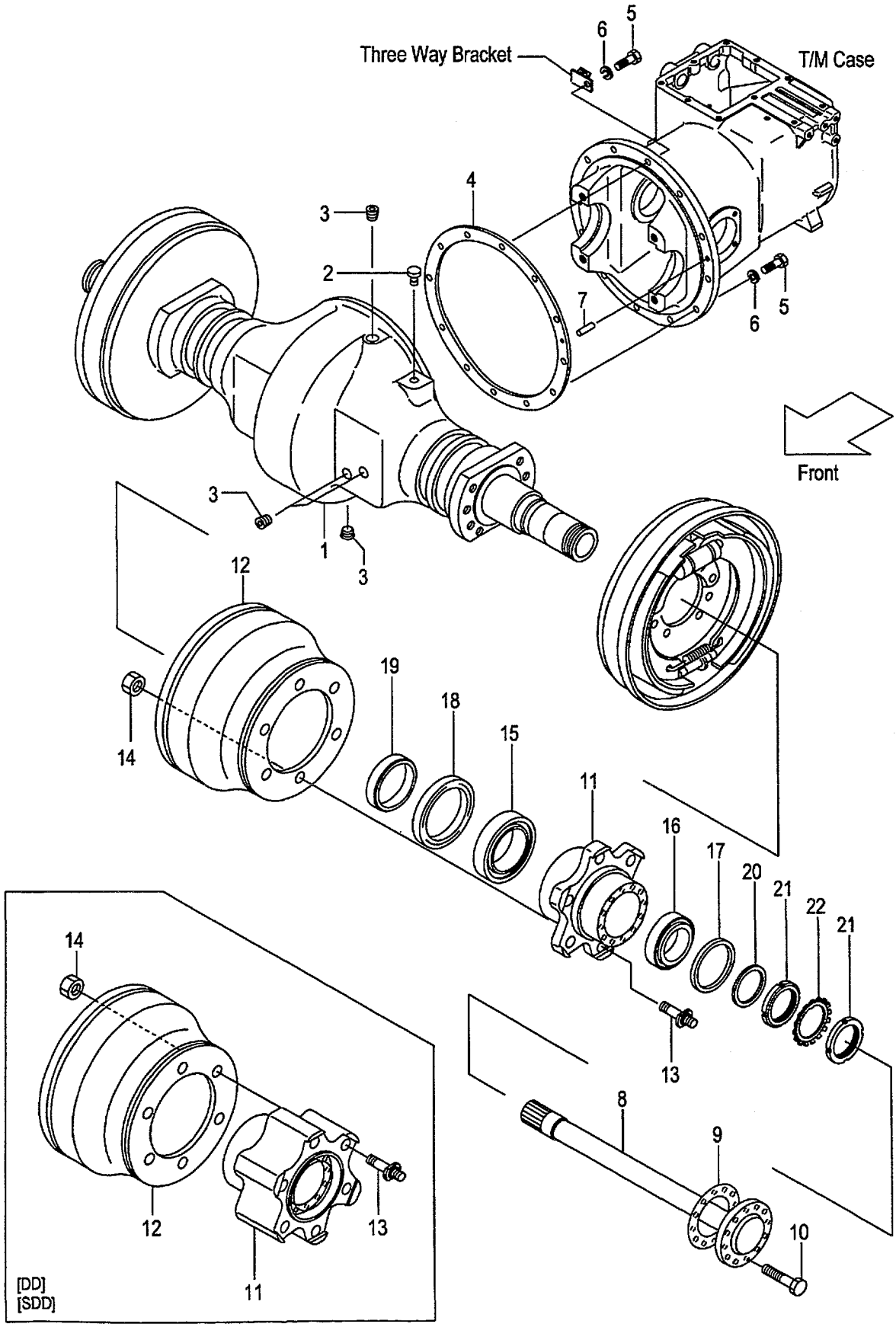

A:FG20C6H FG20T6H FG25C6H FG25T6H FG20W6H FG25W6H:1-15019
B:FD20C6H FD20T6H FD25C6H FD25T6H FD20W6H FD25W6H:1-188

Item No	Part No.	Mark	Description		Req'd	Remarks : Serial No.
1	214A3-00301		HOUSING,AXLE	ﾊｳｼﾞﾝｸﾞ	1	
-	534A7-52011		HOUSING,AXLE	ﾊｳｼﾞﾝｸﾞ	1	[SM][SAS]
2	15573-42151		BREATHER,AIR	ﾌﾞﾘｰｻﾞ	1	
3	22193-03001		PLUG	ﾌﾟﾗｸﾞ	4	
4	24452-52002		PACKING	ﾊﾟｯｷﾝｸﾞ	1	
5	01106-12040		BOLT	ﾎﾞﾙﾄ	12	
6	02011-00012		WASHER	ﾜｯｼｬ	12	
7	02212-10020		PIN,PARALLEL	ﾋﾟﾝ	1	
8	214A3-02011		SHAFT,DRIVE	ｼｬﾌﾄ	2	
9	24453-02102		PACKING	ﾊﾟｯｷﾝｸﾞ	2	
10	24453-02061		BOLT,REAMER	ﾎﾞﾙﾄ	24	
11	214A3-02021		HUB,FRONT	ﾊﾌﾞ	2	
-	514A7-42002		HUB,FRONT	ﾊﾌﾞ	2	[DD][SDD]
12	22673-02031		DRUM,BRAKE	ﾄﾞﾗﾑ	2	
-	53657-42081		DRUM,BRAKE	ﾄﾞﾗﾑ	2	[DD][SDD]
13	24353-72001		BOLT,HUB	ﾎﾞﾙﾄ	12	
-	53657-42091		BOLT,HUB	ﾎﾞﾙﾄ	12	[DD][SDD]
14	01400-10020		NUT	ﾅｯﾄ	12	
15	03071-30214		BRG,TAPER-ROLLER	ﾍﾞｱﾘﾝｸﾞ	2	
16	23453-02071		BRG,TAPER-ROLLER	ﾍﾞｱﾘﾝｸﾞ	2	INC.17
17	23453-02131		SEAL,OIL	ｼｰﾙ	2	
18	23653-02001		SEAL,OIL	ｼｰﾙ	2	
19	24453-02121		RETAINER	ﾘﾃｰﾅ	2	
20	23453-02091		WASHER	ﾜｯｼｬ	2	
21	03192-00012		NUT,BRG	ﾅｯﾄ	4	
22	03192-10012		WASHER,BRG	ﾜｯｼｬ	2	

FIG.78A DRIVE AXLE

(F5H23011) ﾄﾞﾗｲﾌﾞｱｸｽﾙ

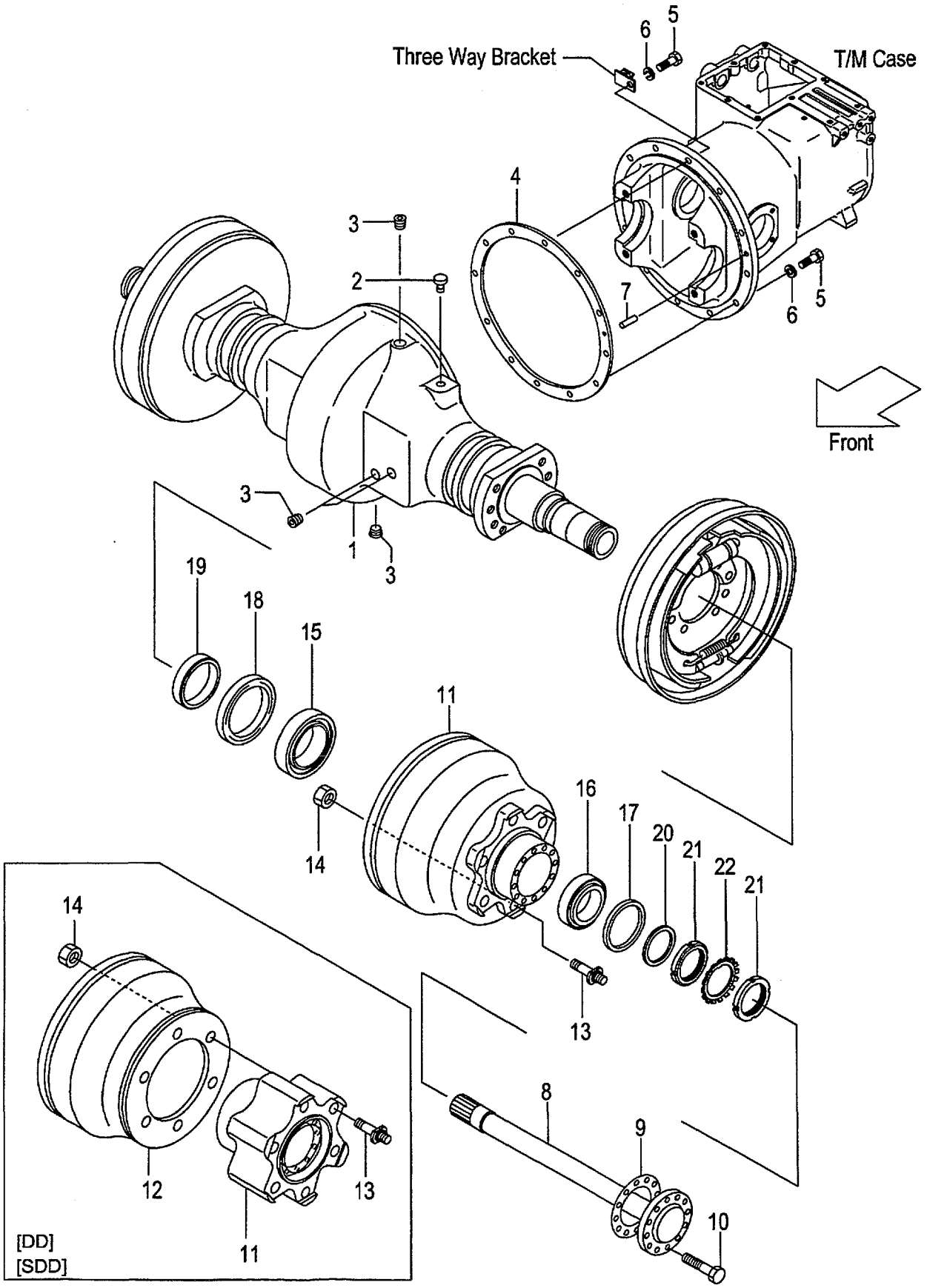

A:FG20C6H FG20T6H FG25C6H FG25T6H FG20W6H FG25W6H:15020-
B:FD20C6H FD20T6H FD25C6H FD25T6H FD20W6H FD25W6H:189-

Item No	Part No.	Mark	Description		Req'd	Remarks : Serial No.
1	214A3-00301		HOUSING,AXLE	ﾊｳｼﾞﾝｸﾞ	1	
-	534A7-52011		HOUSING,AXLE	ﾊｳｼﾞﾝｸﾞ	1	[SM][SAS]
2	15573-42151		BREATHER,AIR	ﾌﾞﾘｰｻﾞ	1	
3	22193-03001		PLUG	ﾌﾟﾗｸﾞ	4	
4	24452-52002		PACKING	ﾊﾟｯｷﾝｸﾞ	1	
5	01106-12040		BOLT	ﾎﾞﾙﾄ	12	
6	02011-00012		WASHER	ﾜｯｼｬ	12	
7	02212-10020		PIN,PARALLEL	ﾋﾟﾝ	1	
8	214A3-02011		SHAFT,DRIVE	ｼｬﾌﾄ	2	
9	24453-02102		PACKING	ﾊﾟｯｷﾝｸﾞ	2	
10	24453-02061		BOLT,REAMER	ﾎﾞﾙﾄ	24	
11	239A3-02001		HUB & DRUM	ﾊﾌﾞ&ﾄﾞﾗﾑ	2	
-	514A7-42002		HUB,FRONT	ﾊﾌﾞ	2	[DD][SDD]
12	53657-42081		DRUM,BRAKE	ﾄﾞﾗﾑ	2	[DD][SDD]
13	24353-72001		BOLT,HUB	ﾎﾞﾙﾄ	12	
-	53657-42091		BOLT,HUB	ﾎﾞﾙﾄ	12	[DD][SDD]
14	01400-10020		NUT	ﾅｯﾄ	12	
15	03071-30214		BRG,TAPER-ROLLER	ﾍﾞｱﾘﾝｸﾞ	2	
16	23453-02071		BRG,TAPER-ROLLER	ﾍﾞｱﾘﾝｸﾞ	2	INC.17
17	23453-02131		SEAL,OIL	ｼｰﾙ	2	
18	23653-02001		SEAL,OIL	ｼｰﾙ	2	
19	24453-02121		RETAINER	ﾘﾃｰﾅ	2	
20	23453-02091		WASHER	ﾜｯｼｬ	2	
21	03192-00012		NUT,BRG	ﾅｯﾄ	4	
22	03192-10012		WASHER,BRG	ﾜｯｼｬ	2	

FIG.79 WHEEL BRAKE

(F5H23710) ホイールブレーキ

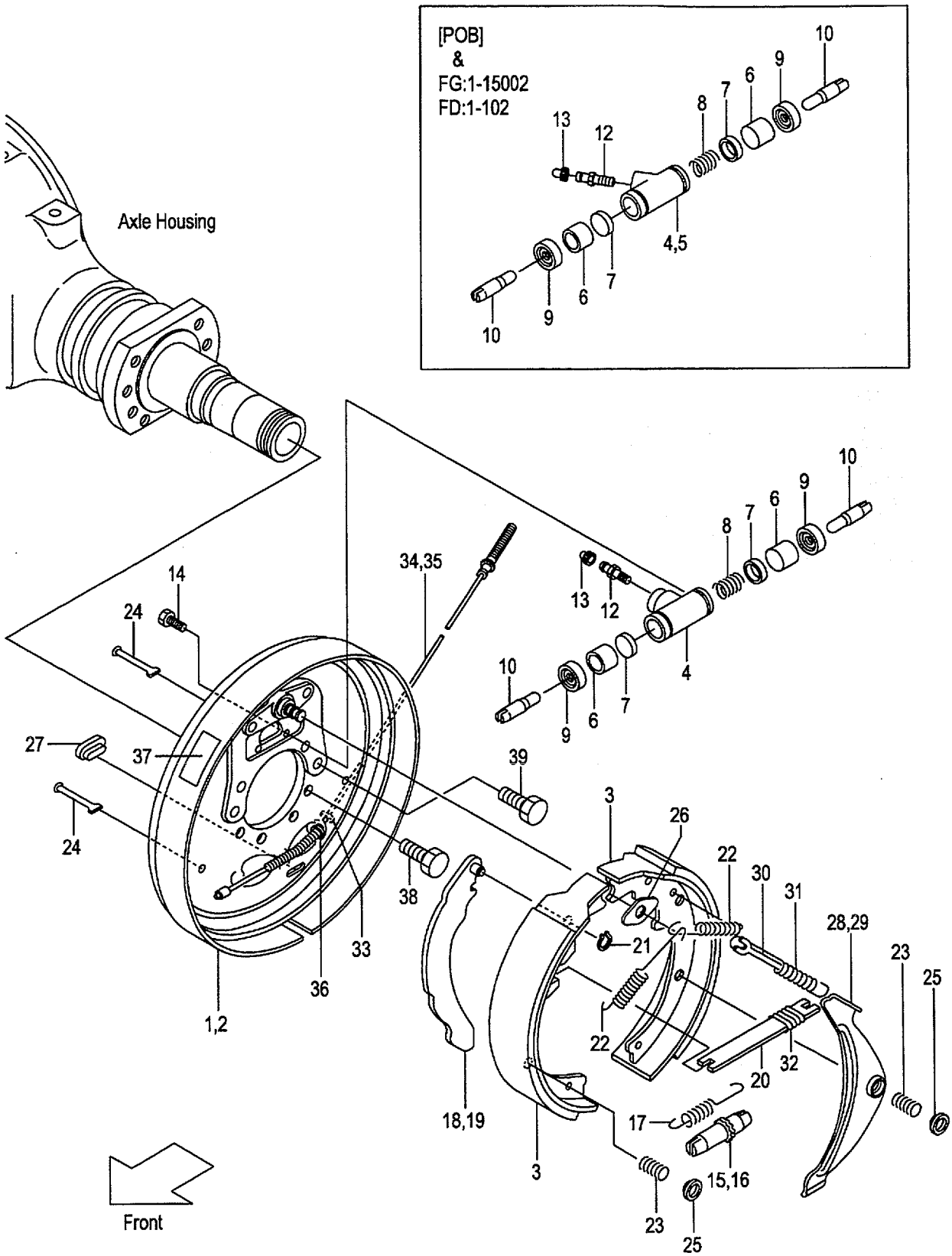

A:FG20C6H FG20T6H FG25C6H FG25T6H FG20W6H FG25W6H
B:FD20C6H FD20T6H FD25C6H FD25T6H FD20W6H FD25W6H

FIG.79
(F5H23710)

Item No	Part No.	Mark	Description		Req'd	Remarks : Serial No.
A1	222A3-70203		BRAKE-ASSY,RH	ﾌﾞﾚｰｷｱｯｾﾝ	1	A:1-15002 B:1-102 INC.1,3,4,6-15,17,18,20-28, 30-34,36,37
-	522A2-60553		BRAKE-ASSY,RH	ﾌﾞﾚｰｷｱｯｾﾝ	1	A:15003- B:103- INC.1,3,4,6-15,17,18,20-28, 30-34,36,37
-	522A2-60572		BRAKE-ASSY,RH	ﾌﾞﾚｰｷｱｯｾﾝ	1	[POB] INC.1,3,4,6-15,17,18,20-28, 30-34,36,37
A2	222A3-70213		BRAKE-ASSY,LH	ﾌﾞﾚｰｷｱｯｾﾝ	1	A:1-15002 B:1-102 INC.2,3,5-14,16,17,19-27, 29-33,35-37
-	522A2-60563		BRAKE-ASSY,LH	ﾌﾞﾚｰｷｱｯｾﾝ	1	A:15003- B:103- INC.2-4,6-14,16,17,19-27, 29-33,35-37
-	522A2-60582		BRAKE-ASSY,LH	ﾌﾞﾚｰｷｱｯｾﾝ	1	[POB] INC.2,3,5-14,16,17,19-27, 29-33,35-37
K1	522A2-61561		KIT,BRAKE-SHOE	ﾌﾞﾚｰｷｼｭｰｷｯﾄ	2	A:15003- B:103- INC.3
-	522A2-61561		KIT,BRAKE-SHOE	ﾌﾞﾚｰｷｼｭｰｷｯﾄ	2	[POB]INC.3
1	23653-72001		PLATE,BACK,RH	ﾌﾟﾚｰﾄ	1	A:1-15002 B:1-102
-	234A3-72021		PLATE,BACK,RH	ﾌﾟﾚｰﾄ	1	A:15003- B:103-
-	23653-72001		PLATE,BACK,RH	ﾌﾟﾚｰﾄ	1	[POB]
2	23653-73011		PLATE,BACK,LH	ﾌﾟﾚｰﾄ	1	A:1-15002 B:1-102
-	234A3-72031		PLATE,BACK,LH	ﾌﾟﾚｰﾄ	1	A:15003- B:103-
-	23653-73011		PLATE,BACK,LH	ﾌﾟﾚｰﾄ	1	[POB]
3	23653-73021		SHOE,BRAKE	ﾌﾞﾚｰｷｼｭｰ	4	A:1-15002 B:1-102
-	NO PART NO.	#*	SHOE,BRAKE	ﾌﾞﾚｰｷｼｭｰ	4	A:15003- B:103-
-	NO PART NO.	#*	SHOE,BRAKE	ﾌﾞﾚｰｷｼｭｰ	4	[POB]
A3	22673-72031		CYL-ASSY,WHEEL,RH	ﾎｲｰﾙｼﾘﾝﾀﾞｱｯｾﾝ	1	A:1-15002 B:1-102 INC.4,6-13
-	234A3-72001		CYL-ASSY,WHEEL	ﾎｲｰﾙｼﾘﾝﾀﾞｱｯｾﾝ	2	A:15003- B:103- INC.4,6-13
-	55593-52461		CYL-ASSY,WHEEL,RH	ﾎｲｰﾙｼﾘﾝﾀﾞｱｯｾﾝ	1	[POB]INC.4,6-13

FIG.79 WHEEL BRAKE

(F5H23710) ホイールブレーキ

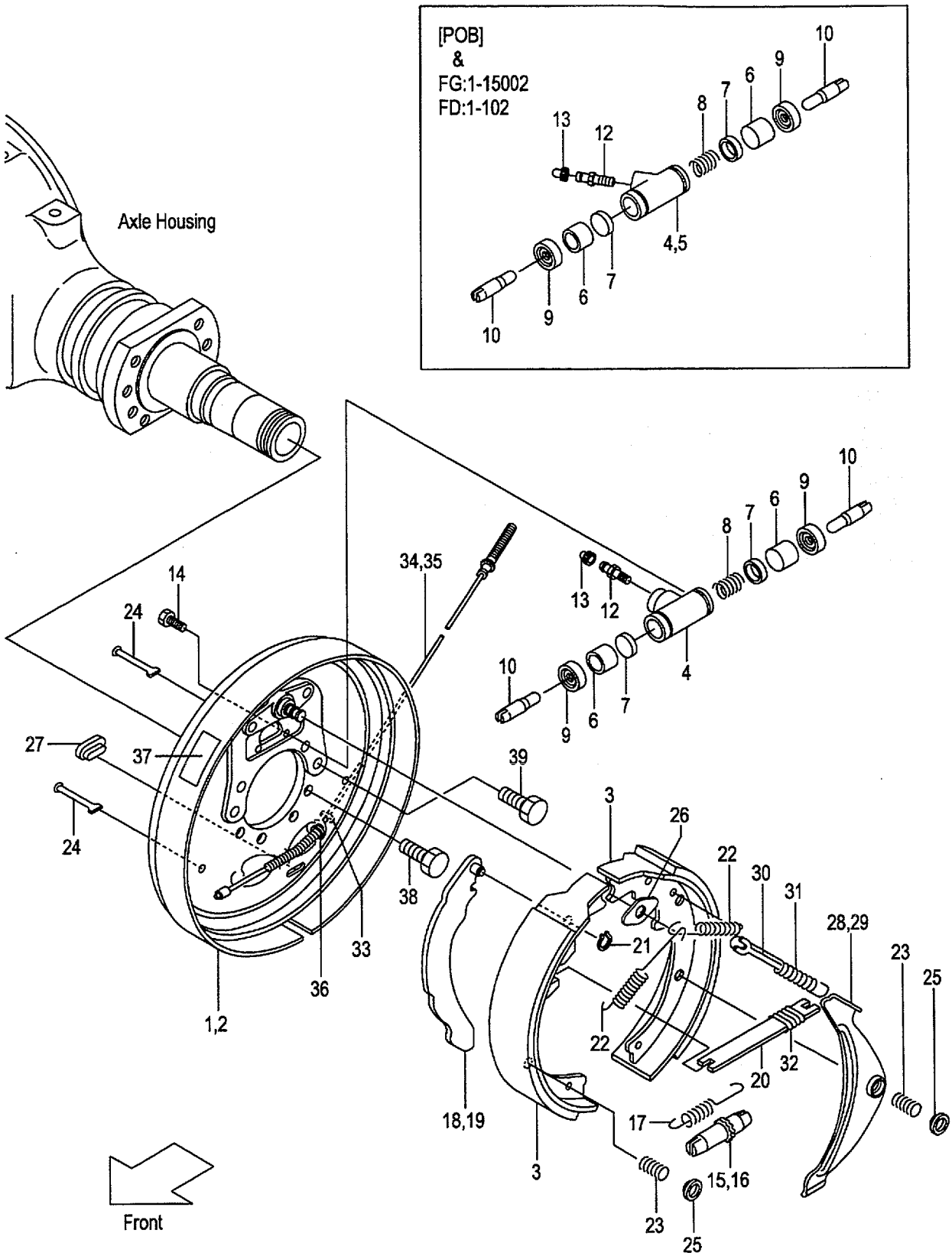

A:FG20C6H FG20T6H FG25C6H FG25T6H FG20W6H FG25W6H
B:FD20C6H FD20T6H FD25C6H FD25T6H FD20W6H FD25W6H

Item No	Part No.	Mark	Description		Req'd	Remarks : Serial No.
A4	22673-72041		CYL-ASSY,WHEEL,LH	ﾎｲｰﾙｼﾘﾝﾀﾞｱｯｾﾝ	1	A:1-15002
						B:1-102
						INC.5-13
-	55593-52471		CYL-ASSY,WHEEL,LH	ﾎｲｰﾙｼﾘﾝﾀﾞｱｯｾﾝ	1	[POB]INC.5-13
K2	22673-79801		KIT,WHEEL-CYL	ﾎｲｰﾙｼﾘﾝﾀﾞｷｯﾄ	2	INC.6-9
-	55593-50521		KIT,WHEEL-CYL	ﾎｲｰﾙｼﾘﾝﾀﾞｷｯﾄ	2	[POB]INC.6-9
K3	229F3-79811		KIT,SUB,WHEEL-CYL	ﾎｲｰﾙｼﾘﾝﾀﾞｻﾌﾞｷｯﾄ	2	[POB]INC.7,9
4	NO PART NO.	#	BODY,WHEEL-CYL,RH	ﾎﾞﾃﾞｨ	1	A:1-15002
						B:1-102
-	NO PART NO.	#	BODY,WHEEL-CYL	ﾎﾞﾃﾞｨ	2	A:15003-
						B:103-
-	NO PART NO.	#	BODY,WHEEL-CYL,RH	ﾎﾞﾃﾞｨ	1	[POB]
5	NO PART NO.	#	BODY,WHEEL-CYL,LH	ﾎﾞﾃﾞｨ	1	A:1-15002
						B:1-102
-	NO PART NO.	#	BODY,WHEEL-CYL,LH	ﾎﾞﾃﾞｨ	1	[POB]
6	NO PART NO.	#*	PISTON	ﾋﾟｽﾄﾝ	4	
7	NO PART NO.	#*	CUP,PISTON	ｶｯﾌﾟ	4	
-	NO PART NO.	#*	CUP,PISTON	ｶｯﾌﾟ	4	[POB]
8	NO PART NO.	#*	SPRING	ｽﾌﾟﾘﾝｸﾞ	2	
-	NO PART NO.	#*	SPRING	ｽﾌﾟﾘﾝｸﾞ	2	[POB]
9	NO PART NO.	#*	COVER,DUST	ｶﾊﾞｰ	4	
10	22673-72111		ROD,PISTON	ﾛｯﾄﾞ	4	
11	22673-72121	+	SEAT,TUBE	ｼｰﾄ	2	
12	22673-72131		SCREW,BLEEDER	ｽｸﾘｭ	2	
13	22673-72141		CAP,BLEEDER-SCREW	ｷｬｯﾌﾟ	2	
14	22673-72161		BOLT	ﾎﾞﾙﾄ	4	
15	23653-72031		ADJUSTER,RH	ｱｼﾞｬｽﾀ	1	
16	23653-72041		ADJUSTER,LH	ｱｼﾞｬｽﾀ	1	
17	23653-72051		SPRING,ADJUSTER	ｽﾌﾟﾘﾝｸﾞ	2	
18	23653-72062		LEVER,BRAKE,RH	ﾚﾊﾞｰ	1	
19	23653-72072		LEVER,BRAKE,LH	ﾚﾊﾞｰ	1	
20	23653-72081		STRUT	ｽﾄﾗｯﾄ	2	
21	22673-72252		RETAINER	ﾘﾃｰﾅ	2	
22	22673-72261		SPRING,SHOE-RETURN	ｽﾌﾟﾘﾝｸﾞ	4	
23	23653-72091		SPRING,SHOE-HOLD	ｽﾌﾟﾘﾝｸﾞ	8	
24	23653-72101		PIN,SHOE-HOLD	ﾋﾟﾝ	8	
25	23653-72111		CUP,WASHER	ｶｯﾌﾟ	8	
26	23653-72131		PLATE,SHOE-GUIDE	ﾌﾟﾚｰﾄ	2	
27	22673-72321		PLUG,RUBBER	ﾌﾟﾗｸﾞ	2	
28	23653-72141		LEVER,PAWL,RH	ﾚﾊﾞｰ	1	
29	23653-72151		LEVER,PAWL,LH	ﾚﾊﾞｰ	1	
30	23653-72161		STOPPER,PAWL-LEVER	ｽﾄｯﾊﾟ	2	
31	23653-72171		SPRING,ACTUATOR	ｽﾌﾟﾘﾝｸﾞ	2	
32	22673-72391		SPRING,ANTIRATTLE	ｽﾌﾟﾘﾝｸﾞ	2	
33	22673-72411		PACKING,RUBBER	ﾊﾟｯｷﾝ	2	
34	222A3-72011		CABLE,CONTROL,RH	ｹｰﾌﾞﾙ	1	
35	222A3-72021		CABLE,CONTROL,LH	ｹｰﾌﾞﾙ	1	
36	23653-72201		RETAINER	ﾘﾃｰﾅ	2	
37	NO PART NO.		DECAL,CAUTION	ﾃﾞｶﾙ	2	
38	214A3-02001		BOLT	ﾎﾞﾙﾄ	12	

FIG.79 WHEEL BRAKE

(F5H23710) ホイールブレーキ

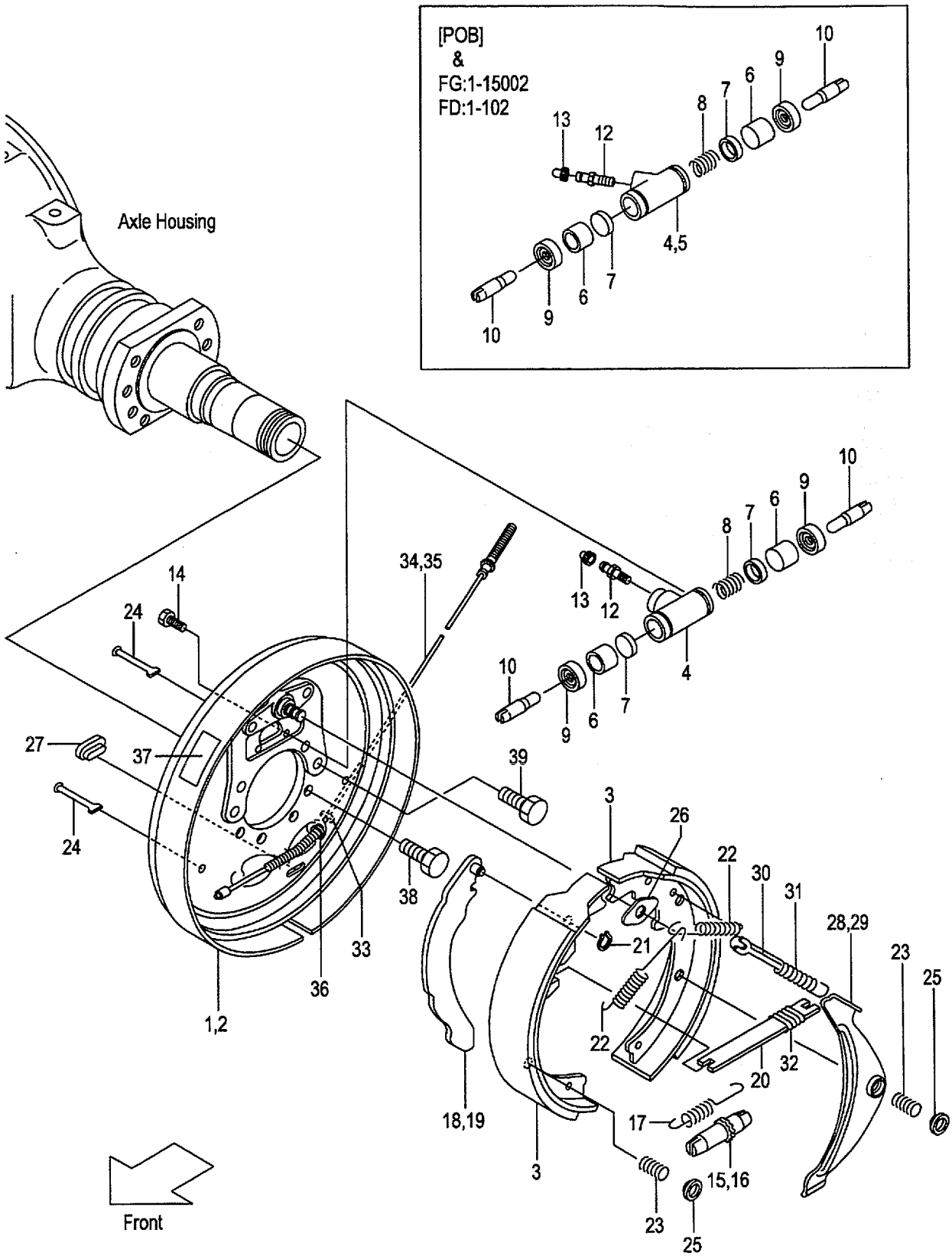

A:FG20C6H FG20T6H FG25C6H FG25T6H FG20W6H FG25W6H
B:FD20C6H FD20T6H FD25C6H FD25T6H FD20W6H FD25W6H

Item No	Part No.	Mark	Description	Req'd	Remarks : Serial No.
39	25953-72001		BOLT,DISC ﾎﾞﾙﾄ	4	

FIG.80 STEERING WHEEL UNIT

(F5H24110) ステアリング゛ホイールユニット

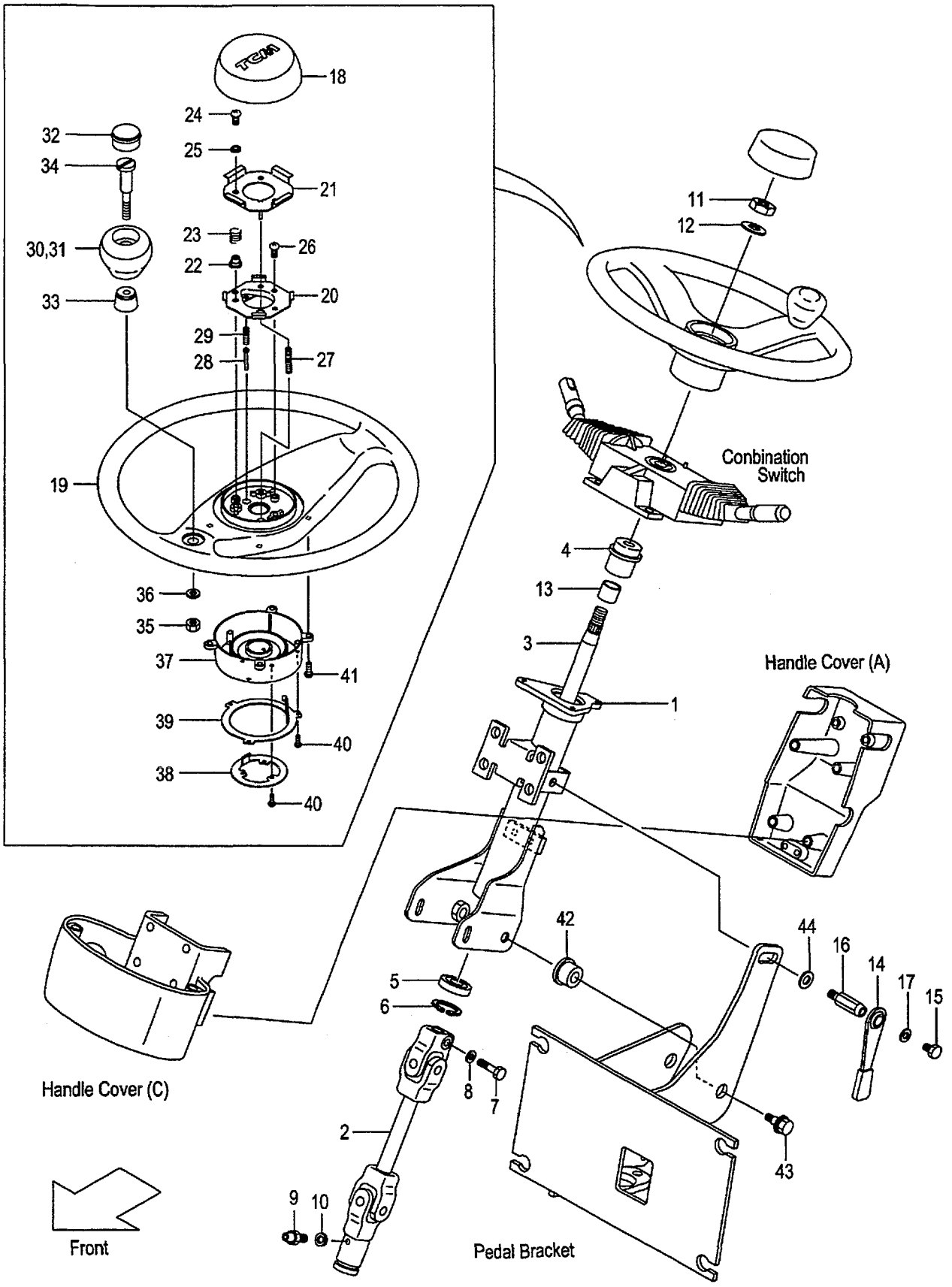

A:FG20C6H FG20T6H FG25C6H FG25T6H FG20W6H FG25W6H
B:FD20C6H FD20T6H FD25C6H FD25T6H FD20W6H FD25W6H

Item No	Part No.	Mark	Description		Req'd	Remarks : Serial No.
A1	239A4-12102		SHAFT-ASSY,STEERING	ｽﾃｱﾘﾝｸﾞｼｬﾌﾄｱｯｾﾝ	1	INC.1-13
1	239A4-12112		COLUMN	ｺﾗﾑ	1	
2	239A4-12121		JOINT,UNIVERSAL	ｼﾞｮｲﾝﾄ	1	
3	239A4-12131		SHAFT	ｼｬﾌﾄ	1	
4	NO PART NO.		BUSHING,COLUMN	ﾌﾞｯｼﾝｸﾞ	1	
5	NO PART NO.		BRG,BALL	ﾍﾞｱﾘﾝｸﾞ	1	
6	NO PART NO.		RING,SNAP	ｽﾅｯﾌﾟﾘﾝｸﾞ	1	
7	NO PART NO.		BOLT	ﾎﾞﾙﾄ	1	
8	NO PART NO.		WASHER	ﾜｯｼｬ	1	
9	NO PART NO.		FITTING	ﾌｨｯﾃｨﾝｸﾞ	1	
10	NO PART NO.		WASHER	ﾜｯｼｬ	1	
11	01402-00014		NUT	ﾅｯﾄ	1	
12	14354-12271		WASHER	ﾜｯｼｬ	1	
13	NO PART NO.		BUSHING,DU	ﾌﾞｯｼﾝｸﾞ	1	
A2	239A4-12402		LEVER-ASSY,TILT-LOCK	ﾃｨﾙﾄﾛｯｸﾚﾊﾞｰｱｯｾﾝ	1	INC.14-17
14	239A4-12411		LEVER	ﾚﾊﾞｰ	1	
15	239A4-12441		BOLT	ﾎﾞﾙﾄ	1	
16	239A4-12431		BOLT,LOCK	ﾎﾞﾙﾄ	1	
17	214A4-12161		WASHER	ﾜｯｼｬ	1	
A3	209K4-10801		WHEEL-ASSY,STEERING	ｽﾃｱﾘﾝｸﾞﾎｲｰﾙｱｯｾﾝ	1	INC.18-41
18	216G4-12761		PAD,HORN	ﾊﾟｯﾄﾞ	1	
19	209K4-12561		WHEEL,STEERING	ﾎｲｰﾙ	1	
A4	271F4-12221		SWITCH-ASSY	ｽｲｯﾁｱｯｾﾝ	1	INC.20-25
20	NO PART NO.	#	PLATE,CONTACT,A	ﾌﾟﾚｰﾄ	1	
21	NO PART NO.	#	PLATE,CONTACT,B	ﾌﾟﾚｰﾄ	1	
22	216G4-12601		INSULATOR	ｲﾝｼｭﾚｰﾀ	3	
23	216G4-12611		SPRING,HORN	ｽﾌﾟﾘﾝｸﾞ	3	
24	216G4-12621		SCREW	ｽｸﾘｭ	3	
25	216G4-12631		WASHER,FIVER	ﾜｯｼｬ	3	
26	216G4-12641		SCREW	ｽｸﾘｭ	2	
27	216G4-12661		SPRING,EARTH	ｽﾌﾟﾘﾝｸﾞ	1	
28	271F4-12231		PLUNGER	ﾌﾟﾗﾝｼﾞｬ	1	
29	271F4-12241		SPRING,PLUNGER	ｽﾌﾟﾘﾝｸﾞ	1	
A5	216G4-12681		KNOB-ASSY	ﾉﾌﾞｱｯｾﾝ	1	INC.30-36
30	NO PART NO.	#	KNOB	ﾉﾌﾞ	1	
31	NO PART NO.	#	INSERT,KNOB	ｲﾝｻｰﾄ	1	
32	216G4-12711		CAP	ｷｬｯﾌﾟ	1	
33	NO PART NO.	#	BUSHING	ﾌﾞｯｼﾝｸﾞ	1	
34	NO PART NO.	#	SHAFT	ｼｬﾌﾄ	1	
35	216G4-12741		NUT	ﾅｯﾄ	1	
36	216G4-12751		WASHER	ﾜｯｼｬ	1	
37	209K4-12541		COVER,CANCEL-CAM	ｶﾊﾞｰ	1	
38	209K4-12531		RING,CONTACT,A	ﾘﾝｸﾞ	1	
39	209K4-12521		RING,CONTACT,B	ﾘﾝｸﾞ	1	
40	209K4-12511		SCREW	ｽｸﾘｭ	6	
41	209K4-12501		SCREW	ｽｸﾘｭ	4	
42	216G4-12101		BUSHING	ﾌﾞｯｼﾝｸﾞ	2	
43	216G4-12111		BOLT	ﾎﾞﾙﾄ	2	
44	02000-00012		WASHER	ﾜｯｼｬ	1	

FIG.81 STEERING WHEEL UNIT (TOR-CON):[EXN]

(F5H24150) ステアリング゛ホイールユニット

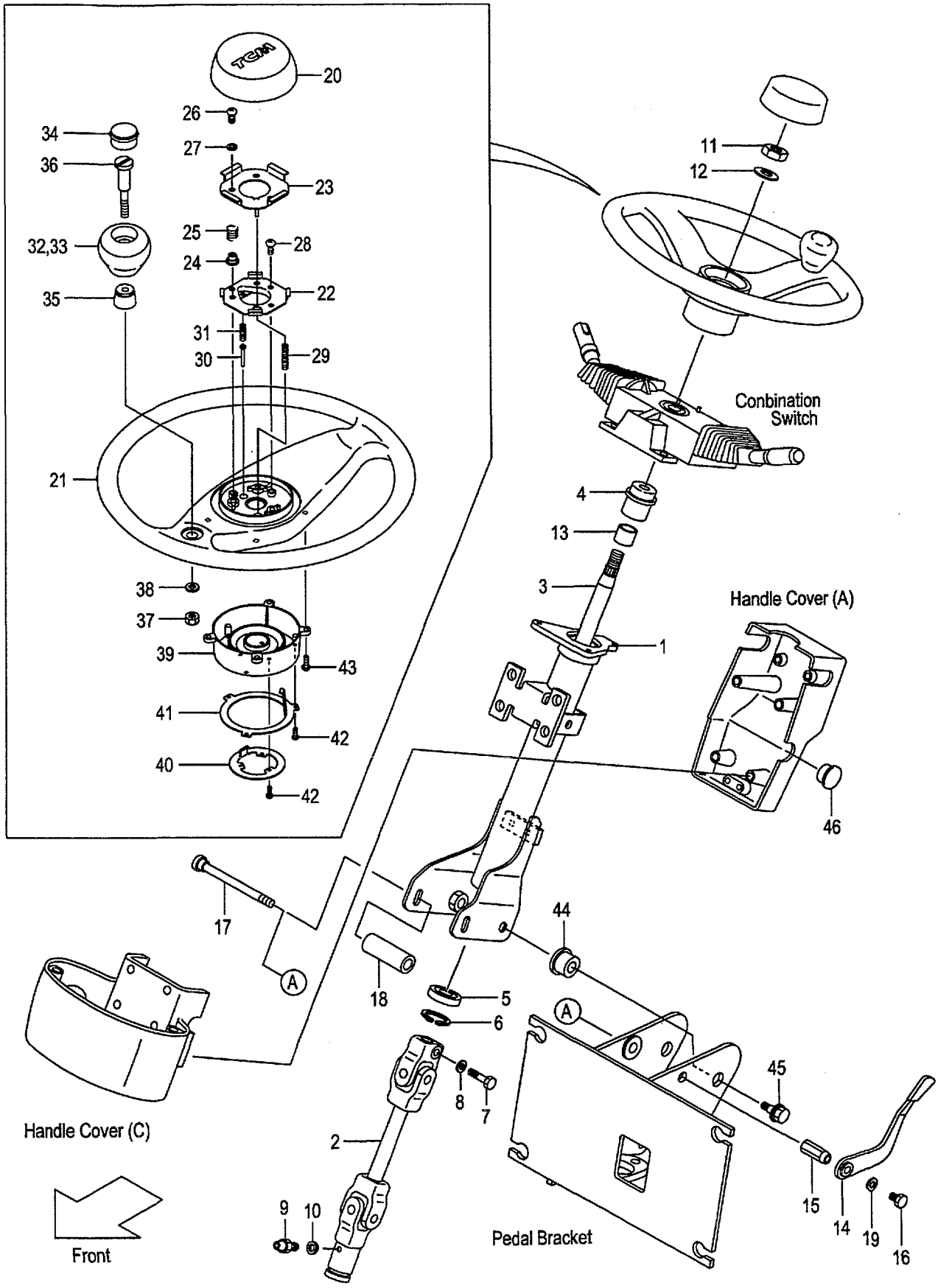

A:FG20T6H FG25T6H
B:FD20T6H FD25T6H

FIG.81
(F5H24150)

Item No	Part No.	Mark	Description		Req'd	Remarks : Serial No.
A1	539A2-60301		SHAFT-ASSY,STEERING	ｽﾃｱﾘﾝｸﾞｼｬﾌﾄｱｯｾﾝ	1	[EXN] INC.1-13
1	539A2-62301		COLUMN	ｺﾗﾑ	1	[EXN]
2	239A4-12121		JOINT,UNIVERSAL	ｼﾞｮｲﾝﾄ	1	[EXN]
3	539A2-62321		SHAFT	ｼｬﾌﾄ	1	[EXN]
4	NO PART NO.		BUSHING,COLUMN	ﾌﾞｯｼﾝｸﾞ	1	[EXN]
5	NO PART NO.		BRG,BALL	ﾍﾞｱﾘﾝｸﾞ	1	[EXN]
6	NO PART NO.		RING,SNAP	ｽﾅｯﾌﾟﾘﾝｸﾞ	1	[EXN]
7	NO PART NO.		BOLT	ﾎﾞﾙﾄ	1	[EXN]
8	NO PART NO.		WASHER	ﾜｯｼｬ	1	[EXN]
9	NO PART NO.		FITTING	ﾌｨｯﾃｨﾝｸﾞ	1	[EXN]
10	NO PART NO.		WASHER	ﾜｯｼｬ	1	[EXN]
11	01402-00014		NUT	ﾅｯﾄ	1	[EXN]
12	14354-12271		WASHER	ﾜｯｼｬ	1	[EXN]
13	NO PART NO.		BUSHING,DU	ﾌﾞｯｼﾝｸﾞ	1	[EXN]
A2	209K4-10601		LEVER-ASSY,TILT-LOCK	ﾃｨﾙﾄﾛｯｸﾚﾊﾞｰｱｯｾﾝ	1	[EXN] INC.14-19
14	216G4-12171		LEVER	ﾚﾊﾞｰ	1	[EXN]
15	209K4-12301		NUT,LOCK	ﾅｯﾄ	1	[EXN]
16	215E4-12231		BOLT	ﾎﾞﾙﾄ	1	[EXN]
17	216G4-12151		BOLT,LOCK	ﾎﾞﾙﾄ	1	[EXN]
18	216G4-12161		COLLAR	ｶﾗｰ	1	[EXN]
19	214A4-12161		WASHER	ﾜｯｼｬ	1	[EXN]
A3	209K4-10801		WHEEL-ASSY,STEERING	ｽﾃｱﾘﾝｸﾞﾎｲｰﾙｱｯｾﾝ	1	[EXN] INC.20-43
20	216G4-12761		PAD,HORN	ﾊﾟｯﾄﾞ	1	[EXN]
21	209K4-12561		WHEEL,STEERING	ﾎｲｰﾙ	1	[EXN]
A4	271F4-12221		SWITCH-ASSY	ｽｲｯﾁｱｯｾﾝ	1	[EXN] INC.22-27
22	NO PART NO.	#	PLATE,CONTACT,A	ﾌﾟﾚｰﾄ	1	[EXN]
23	NO PART NO.	#	PLATE,CONTACT,B	ﾌﾟﾚｰﾄ	1	[EXN]
24	216G4-12601		INSULATOR	ｲﾝｼｭﾚｰﾀ	3	[EXN]
25	216G4-12611		SPRING,HORN	ｽﾌﾟﾘﾝｸﾞ	3	[EXN]
26	216G4-12621		SCREW	ｽｸﾘｭ	3	[EXN]
27	216G4-12631		WASHER,FIVER	ﾜｯｼｬ	3	[EXN]
28	216G4-12641		SCREW	ｽｸﾘｭ	2	[EXN]
29	216G4-12661		SPRING,EARTH	ｽﾌﾟﾘﾝｸﾞ	1	[EXN]
30	271F4-12231		PLUNGER	ﾌﾟﾗﾝｼﾞｬ	1	[EXN]
31	271F4-12241		SPRING,PLUNGER	ｽﾌﾟﾘﾝｸﾞ	1	[EXN]
A5	216G4-12681		KNOB-ASSY	ﾉﾌﾞｱｯｾﾝ	1	[EXN] INC.32-38
32	NO PART NO.	#	KNOB	ﾉﾌﾞ	1	[EXN]
33	NO PART NO.	#	INSERT,KNOB	ｲﾝｻｰﾄ	1	[EXN]
34	216G4-12711		CAP	ｷｬｯﾌﾟ	1	[EXN]
35	NO PART NO.	#	BUSHING	ﾌﾞｯｼﾝｸﾞ	1	[EXN]
36	NO PART NO.	#	SHAFT	ｼｬﾌﾄ	1	[EXN]
37	216G4-12741		NUT	ﾅｯﾄ	1	[EXN]
38	216G4-12751		WASHER	ﾜｯｼｬ	1	[EXN]
39	209K4-12541		COVER,CANCEL-CAM	ｶﾊﾞｰ	1	[EXN]
40	209K4-12531		RING,CONTACT,A	ﾘﾝｸﾞ	1	[EXN]
41	209K4-12521		RING,CONTACT,B	ﾘﾝｸﾞ	1	[EXN]
42	209K4-12511		SCREW	ｽｸﾘｭ	6	[EXN]
43	209K4-12501		SCREW	ｽｸﾘｭ	4	[EXN]
44	216G4-12101		BUSHING	ﾌﾞｯｼﾝｸﾞ	2	[EXN]
45	216G4-12111		BOLT	ﾎﾞﾙﾄ	2	[EXN]

FIG.81 STEERING WHEEL UNIT (TOR-CON):[EXN]

(F5H24150) ステアリング゛ホイールユニット

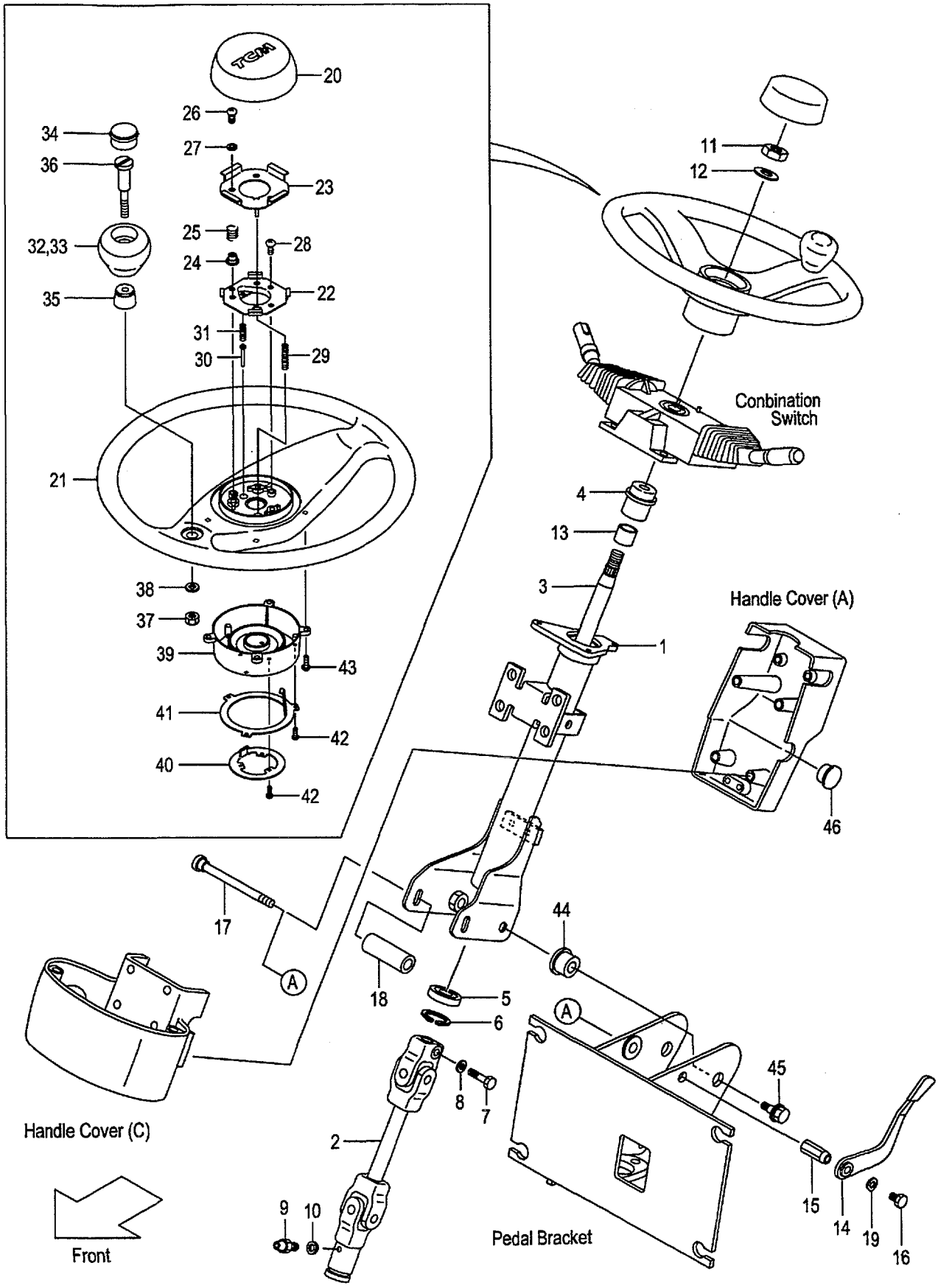

A:FG20T6H FG25T6H
B:FD20T6H FD25T6H

FIG.81
(F5H24150)

Item No	Part No.	Mark	Description	Req'd	Remarks : Serial No.
46	514A5-12701		PLUG,HOLE ﾌﾟﾗｸﾞ	1	[EXN]

FIG.82 GEAR BOX

(F5H24120) ｷﾞﾔｰﾎﾞｯｸｽ

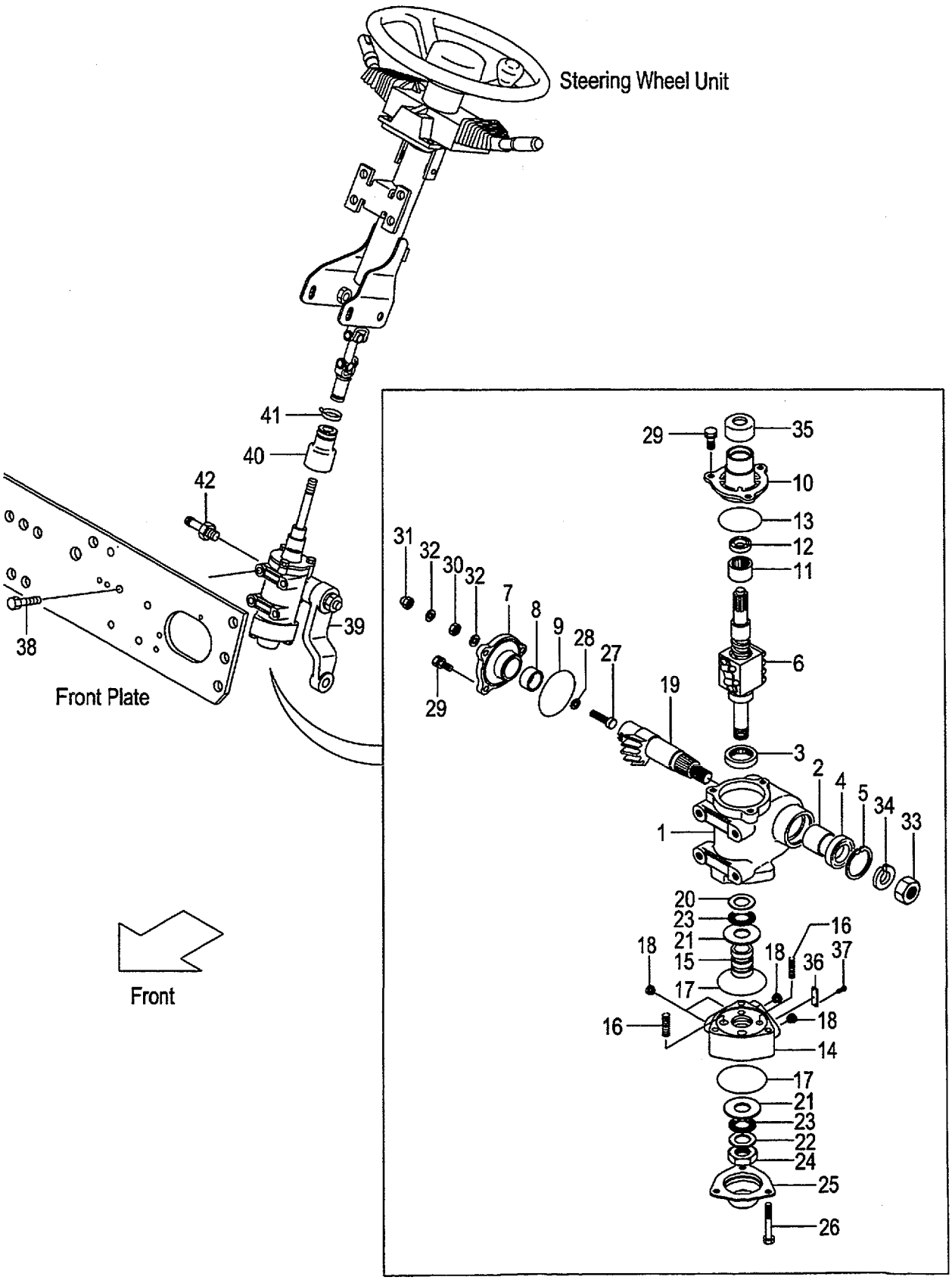

A:FG20C6H FG20T6H FG25C6H FG25T6H FG20W6H FG25W6H
B:FD20C6H FD20T6H FD25C6H FD25T6H FD20W6H FD25W6H

Item No	Part No.	Mark	Description		Req'd	Remarks : Serial No.
A1	239A4-12201		BOX-ASSY,GEAR	ｷﾞﾔｰﾎﾞｯｸｽｱｯｾﾝ	1	INC.1-37
A2	B-23643-00526		CASE-ASSY,GEAR	ｷﾞﾔｰｹｰｽｱｯｾﾝ	1	INC.1-5
1	NO PART NO.	#	CASE,GEAR	ｹｰｽ	1	
2	B-23641-03716		BUSHING	ﾌﾞｯｼﾝｸﾞ	1	
3	B-23451-02016		BRG,RADIAL	ﾍﾞｱﾘﾝｸﾞ	1	
4	B-23711-01922		SEAL,OIL	ｼｰﾙ	1	
5	B-94721-38151		RING,SNAP	ｽﾅｯﾌﾟﾘﾝｸﾞ	1	
6	B-B3613-13001		SCREW,BALL	ｽｸﾘｭ	1	
A3	B-23642-00911		COVER-ASSY,SIDE	ｶﾊﾞｰｱｯｾﾝ	1	INC.7-9
7	NO PART NO.	#	COVER,SIDE	ｶﾊﾞｰ	1	
8	B-23641-03716		BUSHING	ﾌﾞｯｼﾝｸﾞ	1	
9	B-95121-06000		O-RING	Oﾘﾝｸﾞ	1	
A4	B-23643-00618		COVER-ASSY,TOP	ﾄｯﾌﾟｶﾊﾞｰｱｯｾﾝ	1	INC.10-13
10	NO PART NO.	#	COVER,TOP	ｶﾊﾞｰ	1	
11	NO PART NO.	#	BRG,RADIAL	ﾍﾞｱﾘﾝｸﾞ	1	
12	NO PART NO.	#	SEAL,OIL	ｼｰﾙ	1	
13	B-95121-06000		O-RING	Oﾘﾝｸﾞ	1	
A5	B-23643-00296		HOUSING-ASSY,VALAE	ﾊﾞﾙﾌﾞﾊｳｼﾞﾝｸﾞｱｯｾﾝ	1	INC.14-18
14	NO PART NO.	#	HOUSING,VALVE	ﾊｳｼﾞﾝｸﾞ	1	
15	NO PART NO.	#	SPOOL	ｽﾌﾟｰﾙ	1	
16	14354-12321		SPRING	ｽﾌﾟﾘﾝｸﾞ	4	
17	B-95151-06300		O-RING	Oﾘﾝｸﾞ	2	
18	25594-52141		FERRULE	ﾌｪﾙｰﾙ	4	
19	B-23641-00313		SHAFT,SECTOR	ｼｬﾌﾄ	1	
20	B-23641-01609		RACE,THRUST	ﾚｰｽ	1	
21	B-23641-01610		RACE,THRUST	ﾚｰｽ	2	
22	B-23451-02212		RACE,THRUST	ﾚｰｽ	1	
23	B-23451-02106		BRG,THRUST	ﾍﾞｱﾘﾝｸﾞ	2	
24	B-23641-02227		NUT	ﾅｯﾄ	1	
25	B-23641-02508		COVER,END	ｶﾊﾞｰ	1	
26	B-23641-03314		BOLT	ﾎﾞﾙﾄ	3	
27	14354-12211		SCREW,ADJUST	ｽｸﾘｭ	1	
28	14354-12221		SHIM,ADJUST-SCREW	ｼﾑ	1	
29	B-23711-03701		BOLT	ﾎﾞﾙﾄ	6	
30	01402-10010		NUT	ﾅｯﾄ	1	
31	14354-12261		NUT,CAP	ﾅｯﾄ	1	
32	14354-12251		PACKING	ﾊﾟｯｷﾝｸﾞ	2	
33	B-23641-02218		NUT	ﾅｯﾄ	1	
34	B-94101-20512		WASHER	ﾜｯｼｬ	1	
35	B-23641-04303		COVER,DUST	ｶﾊﾞｰ	1	
36	NO PART NO.	#	PLATE,NAME	ﾌﾟﾚｰﾄ	1	
37	NO PART NO.	#	SCREW,DRIVE	ｽｸﾘｭ	2	
38	01184-12030		BOLT	ﾎﾞﾙﾄ	4	
39	239A4-22001		ARM,PITMAN	ｱｰﾑ	1	
40	239A4-12211		BOOT,GEAR-BOX	ﾌﾞｰﾂ	1	
41	04913-11200		BAND	ﾊﾞﾝﾄﾞ	1	
42	25597-62211		NIPPLE	ﾆｯﾌﾟﾙ	1	

FIG.83 GEAR BOX [(EXC,EXE,EXK,EXN)/PSS]

(F5H24140) ｷﾞﾔｰﾎﾞｯｸｽ

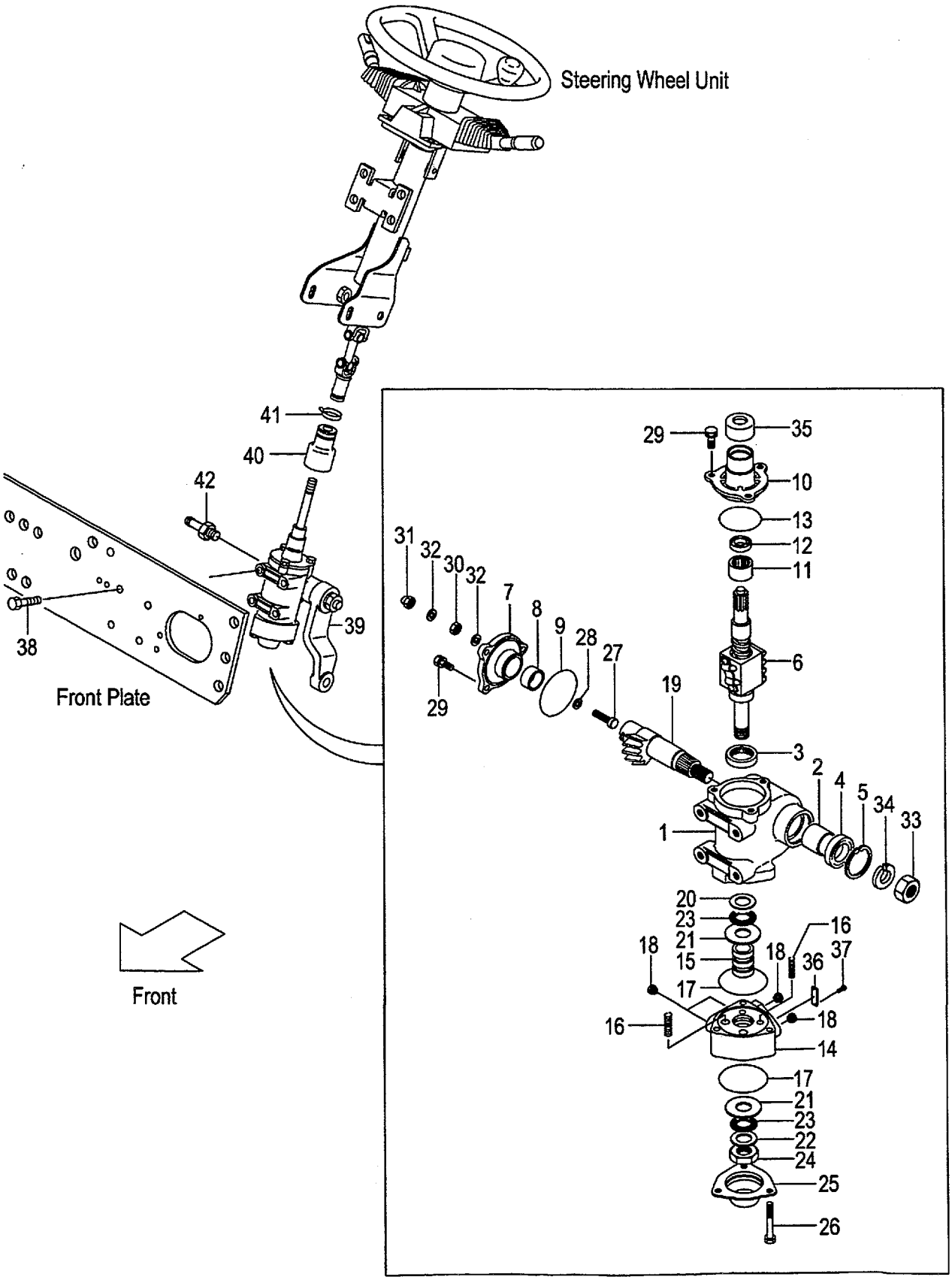

A:FG20C6H FG20T6H FG25C6H FG25T6H
B:FD20C6H FD20T6H FD25C6H FD25T6H

FIG.83
(F5H24140)

Item No	Part No.	Mark	Description		Req'd	Remarks : Serial No.
A1	239A4-12201		BOX-ASSY,GEAR	ｷﾞﾔｰﾎﾞｯｸｽｱｯｾﾝ	1	[EXC/PSS][EXE/PSS][EXK/PSS] [EXN/PSS] INC.1-37
A2	B-23643-00526		CASE-ASSY,GEAR	ｷﾞﾔｰｹｰｽｱｯｾﾝ	1	[EXC/PSS][EXE/PSS][EXK/PSS] [EXN/PSS] INC.1-5
1	NO PART NO.	#	CASE,GEAR	ｹｰｽ	1	[EXC/PSS][EXE/PSS][EXK/PSS] [EXN/PSS]
2	B-23641-03716		BUSHING	ﾌﾞｯｼﾝｸﾞ	1	[EXC/PSS][EXE/PSS][EXK/PSS] [EXN/PSS]
3	B-23451-02016		BRG,RADIAL	ﾍﾞｱﾘﾝｸﾞ	1	[EXC/PSS][EXE/PSS][EXK/PSS] [EXN/PSS]
4	B-23711-01922		SEAL,OIL	ｼｰﾙ	1	[EXC/PSS][EXE/PSS][EXK/PSS] [EXN/PSS]
5	B-94721-38151		RING,SNAP	ｽﾅｯﾌﾟﾘﾝｸﾞ	1	[EXC/PSS][EXE/PSS][EXK/PSS] [EXN/PSS]
6	B-B3613-13001		SCREW,BALL	ｽｸﾘｭ	1	[EXC/PSS][EXE/PSS][EXK/PSS] [EXN/PSS]
A3	B-23642-00911		COVER-ASSY,SIDE	ｶﾊﾞｰｱｯｾﾝ	1	[EXC/PSS][EXE/PSS][EXK/PSS] [EXN/PSS] INC.7-9
7	NO PART NO.	#	COVER,SIDE	ｶﾊﾞｰ	1	[EXC/PSS][EXE/PSS][EXK/PSS] [EXN/PSS]
8	B-23641-03716		BUSHING	ﾌﾞｯｼﾝｸﾞ	1	[EXC/PSS][EXE/PSS][EXK/PSS] [EXN/PSS]
9	B-95121-06000		O-RING	Oﾘﾝｸﾞ	1	[EXC/PSS][EXE/PSS][EXK/PSS] [EXN/PSS]
A4	B-23643-00618		COVER-ASSY,TOP	ﾄｯﾌﾟｶﾊﾞｰｱｯｾﾝ	1	[EXC/PSS][EXE/PSS][EXK/PSS] [EXN/PSS] INC.10-13
10	NO PART NO.	#	COVER,TOP	ｶﾊﾞｰ	1	[EXC/PSS][EXE/PSS][EXK/PSS] [EXN/PSS]
11	NO PART NO.	#	BRG,RADIAL	ﾍﾞｱﾘﾝｸﾞ	1	[EXC/PSS][EXE/PSS][EXK/PSS] [EXN/PSS]
12	NO PART NO.	#	SEAL,OIL	ｼｰﾙ	1	[EXC/PSS][EXE/PSS][EXK/PSS] [EXN/PSS]
13	B-95121-06000		O-RING	Oﾘﾝｸﾞ	1	[EXC/PSS][EXE/PSS][EXK/PSS] [EXN/PSS]
A5	B-23643-00296		HOUSING-ASSY,VALAE	ﾊﾞﾙﾌﾞﾊｳｼﾞﾝｸﾞｱｯｾﾝ	1	[EXC/PSS][EXE/PSS][EXK/PSS] [EXN/PSS] INC.14-18
14	NO PART NO.	#	HOUSING,VALVE	ﾊｳｼﾞﾝｸﾞ	1	[EXC/PSS][EXE/PSS][EXK/PSS] [EXN/PSS]
15	NO PART NO.	#	SPOOL	ｽﾌﾟｰﾙ	1	[EXC/PSS][EXE/PSS][EXK/PSS] [EXN/PSS]
16	14354-12321		SPRING	ｽﾌﾟﾘﾝｸﾞ	4	[EXC/PSS][EXE/PSS][EXK/PSS] [EXN/PSS]
17	B-95151-06300		O-RING	Oﾘﾝｸﾞ	2	[EXC/PSS][EXE/PSS][EXK/PSS] [EXN/PSS]
18	25594-52141		FERRULE	ﾌｪﾙｰﾙ	4	[EXC/PSS][EXE/PSS][EXK/PSS] [EXN/PSS]
19	B-23641-00313		SHAFT,SECTOR	ｼｬﾌﾄ	1	[EXC/PSS][EXE/PSS][EXK/PSS] [EXN/PSS]
20	B-23641-01609		RACE,THRUST	ﾚｰｽ	1	[EXC/PSS][EXE/PSS][EXK/PSS] [EXN/PSS]

FIG.83 GEAR BOX [(EXC,EXE,EXK,EXN)/PSS]

(F5H24140) ｷﾞﾔｰﾎﾞｯｸｽ

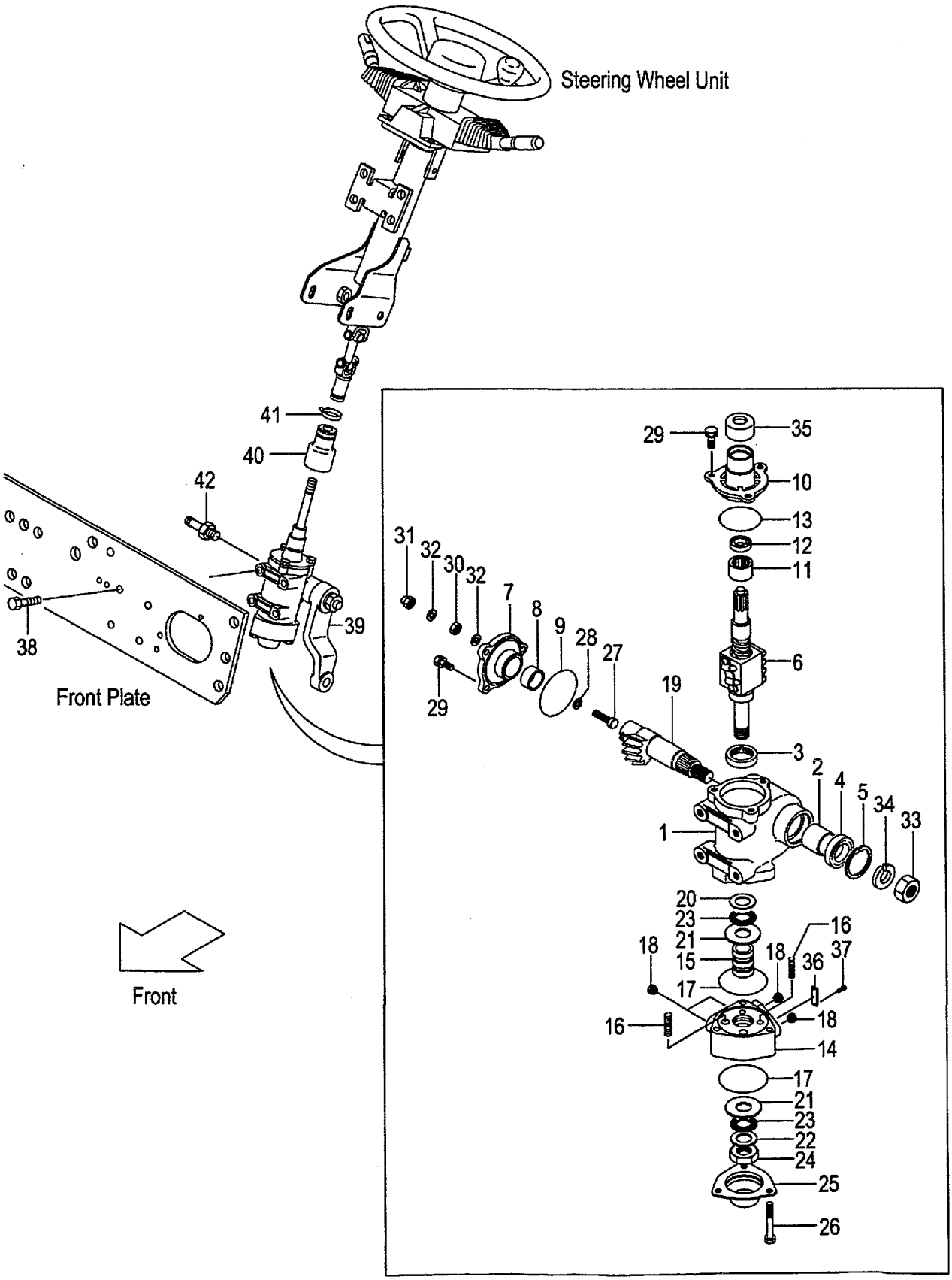

A:FG20C6H FG20T6H FG25C6H FG25T6H
B:FD20C6H FD20T6H FD25C6H FD25T6H

Item No	Part No.	Mark	Description		Req'd	Remarks : Serial No.
21	B-23641-01610		RACE,THRUST	ﾚｰｽ	2	[EXC/PSS][EXE/PSS][EXK/PSS][EXN/PSS]
22	B-23451-02212		RACE,THRUST	ﾚｰｽ	1	[EXC/PSS][EXE/PSS][EXK/PSS][EXN/PSS]
23	B-23451-02106		BRG,THRUST	ﾍﾞｱﾘﾝｸﾞ	2	[EXC/PSS][EXE/PSS][EXK/PSS][EXN/PSS]
24	B-23641-02227		NUT	ﾅｯﾄ	1	[EXC/PSS][EXE/PSS][EXK/PSS][EXN/PSS]
25	B-23641-02508		COVER,END	ｶﾊﾞｰ	1	[EXC/PSS][EXE/PSS][EXK/PSS][EXN/PSS]
26	B-23641-03314		BOLT	ﾎﾞﾙﾄ	3	[EXC/PSS][EXE/PSS][EXK/PSS][EXN/PSS]
27	14354-12211		SCREW,ADJUST	ｽｸﾘｭ	1	[EXC/PSS][EXE/PSS][EXK/PSS][EXN/PSS]
28	14354-12221		SHIM,ADJUST-SCREW	ｼﾑ	1	[EXC/PSS][EXE/PSS][EXK/PSS][EXN/PSS]
29	B-23711-03701		BOLT	ﾎﾞﾙﾄ	6	[EXC/PSS][EXE/PSS][EXK/PSS][EXN/PSS]
30	01402-10010		NUT	ﾅｯﾄ	1	[EXC/PSS][EXE/PSS][EXK/PSS][EXN/PSS]
31	14354-12261		NUT,CAP	ﾅｯﾄ	1	[EXC/PSS][EXE/PSS][EXK/PSS][EXN/PSS]
32	14354-12251		PACKING	ﾊﾟｯｷﾝｸﾞ	2	[EXC/PSS][EXE/PSS][EXK/PSS][EXN/PSS]
33	B-23641-02218		NUT	ﾅｯﾄ	1	[EXC/PSS][EXE/PSS][EXK/PSS][EXN/PSS]
34	B-94101-20512		WASHER	ﾜｯｼｬ	1	[EXC/PSS][EXE/PSS][EXK/PSS][EXN/PSS]
35	B-23641-04303		COVER,DUST	ｶﾊﾞｰ	1	[EXC/PSS][EXE/PSS][EXK/PSS][EXN/PSS]
36	NO PART NO.	#	PLATE,NAME	ﾌﾟﾚｰﾄ	1	[EXC/PSS][EXE/PSS][EXK/PSS][EXN/PSS]
37	NO PART NO.	#	SCREW,DRIVE	ｽｸﾘｭ	2	[EXC/PSS][EXE/PSS][EXK/PSS][EXN/PSS]
38	01184-12030		BOLT	ﾎﾞﾙﾄ	4	[EXC/PSS][EXE/PSS][EXK/PSS][EXN/PSS]
39	239A4-22001		ARM,PITMAN	ｱｰﾑ	1	[EXC/PSS][EXE/PSS][EXK/PSS][EXN/PSS]
40	239A4-12211		BOOT,GEAR-BOX	ﾌﾞｰﾂ	1	[EXC/PSS][EXE/PSS][EXK/PSS][EXN/PSS]
41	04913-11200		BAND	ﾊﾞﾝﾄﾞ	1	[EXC/PSS][EXE/PSS][EXK/PSS][EXN/PSS]
42	25597-62211		NIPPLE	ﾆｯﾌﾟﾙ	1	[EXC/PSS][EXE/PSS][EXK/PSS][EXN/PSS]

FIG.84 ORBITROL [EXC][EXE][EXK][EXN][OBT]

(F5H24130) オーピットロール

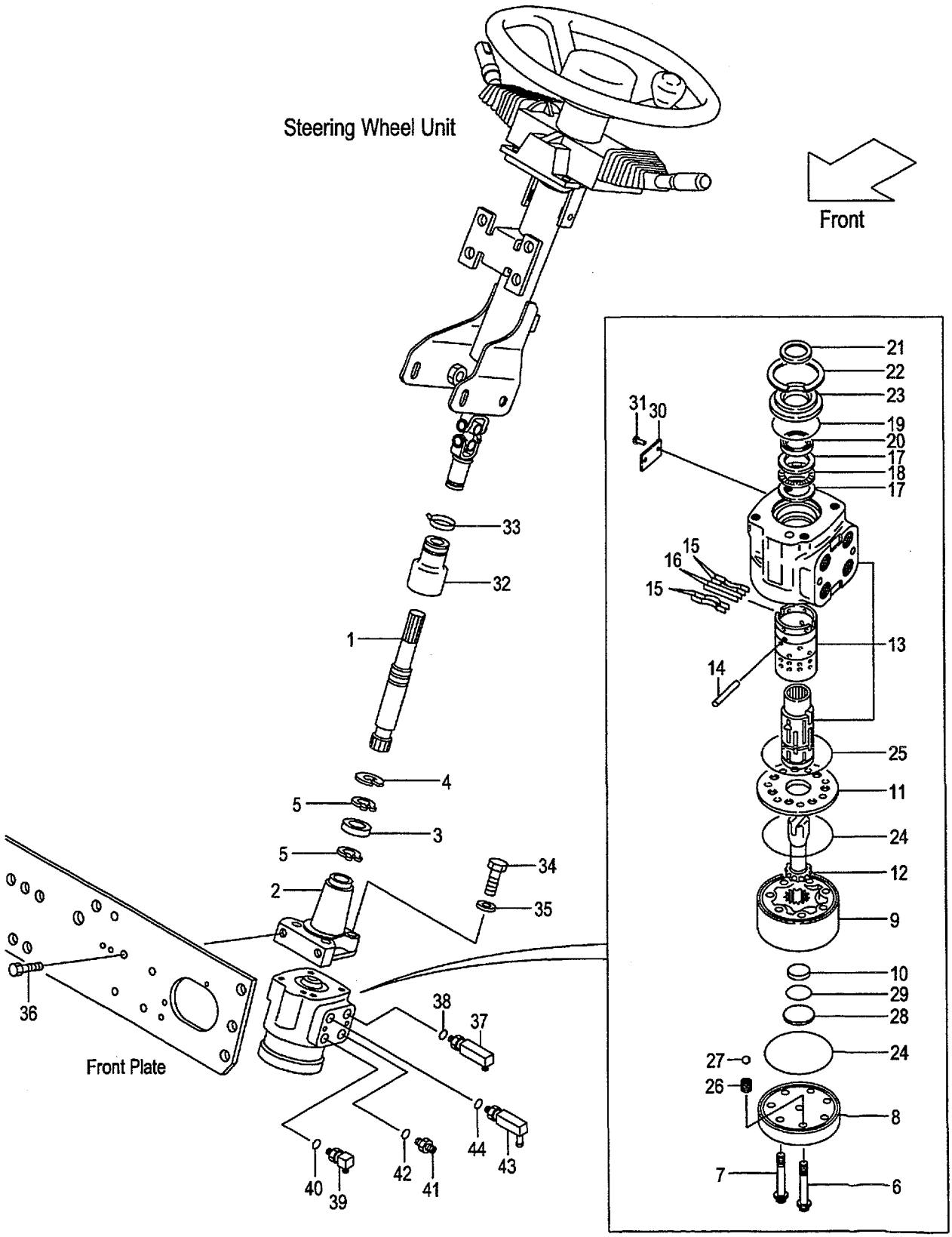

A:FG20C6H FG20T6H FG25C6H FG25T6H
B:FD20C6H FD20T6H FD25C6H FD25T6H

FIG.84
(F5H24130)

Item No	Part No.	Mark	Description		Req'd	Remarks : Serial No.
1	539A2-42001		SHAFT,HANDLE	ｼｬﾌﾄ	1	[EXC][EXE][EXK][EXN][OBT] [EXB/OBT]
2	539A2-42011		FLANGE	ﾌﾗﾝｼﾞ	1	[EXC][EXE][EXK][EXN][OBT] [EXB/OBT]
3	03010-06904		BRG,BALL	ﾍﾞｱﾘﾝｸﾞ	1	[EXC][EXE][EXK][EXN][OBT] [EXB/OBT]
4	02110-00037		RING,SNAP	ｽﾅｯﾌﾟﾘﾝｸﾞ	1	[EXC][EXE][EXK][EXN][OBT] [EXB/OBT]
5	02100-00020		RING,SNAP	ｽﾅｯﾌﾟﾘﾝｸﾞ	2	[EXC][EXE][EXK][EXN][OBT] [EXB/OBT]
A1	15604-10202		UNIT-ASSY,ORBITROL	ｵｰﾋﾞｯﾄﾛｰﾙﾕﾆｯﾄｱｯｾﾝ	1	[EXC][EXE][EXK][EXN][OBT] [EXB/OBT] INC.6-31
6	26094-17151		SCREW	ｽｸﾘｭ	6	[EXC][EXE][EXK][EXN][OBT] [EXB/OBT]
7	NO PART NO.		SCREW,RETAINER	ｽｸﾘｭ	1	[EXC][EXE][EXK][EXN][OBT] [EXB/OBT]
8	26094-17141		CAP,END	ｷｬｯﾌﾟ	1	[EXC][EXE][EXK][EXN][OBT] [EXB/OBT]
9	26094-17121		GEROTOR	ｼﾞﾛｰﾀ	1	[EXC][EXE][EXK][EXN][OBT] [EXB/OBT]
10	514A2-42601		SPACER	ｽﾍﾟｰｻ	1	[EXC][EXE][EXK][EXN][OBT] [EXB/OBT]
11	26094-17101		PLATE,SPACER	ﾌﾟﾚｰﾄ	1	[EXC][EXE][EXK][EXN][OBT] [EXB/OBT]
12	26094-17111		DRIVE	ﾄﾞﾗｲﾌﾞ	1	[EXC][EXE][EXK][EXN][OBT] [EXB/OBT]
13	516G2-42401		PARTS,CONTROL	ﾊﾟｰﾂ	1	[EXC][EXE][EXK][EXN][OBT] [EXB/OBT]
14	26094-17091		PIN	ﾋﾟﾝ	1	[EXC][EXE][EXK][EXN][OBT] [EXB/OBT]
15	26094-17081		SPRING,CENTERING	ｽﾌﾟﾘﾝｸﾞ	4	[EXC][EXE][EXK][EXN][OBT] [EXB/OBT]
16	26314-17021		SPRING,FLAT	ｽﾌﾟﾘﾝｸﾞ	2	[EXC][EXE][EXK][EXN][OBT] [EXB/OBT]
17	NO PART NO.	*	RACE,BRG	ﾚｰｽ	2	[EXC][EXE][EXK][EXN][OBT] [EXB/OBT]
18	NO PART NO.	*	BRG,THRUST,NEEDLE	ﾍﾞｱﾘﾝｸﾞ	1	[EXC][EXE][EXK][EXN][OBT] [EXB/OBT]
19	NO PART NO.	#*	O-RING	Oﾘﾝｸﾞ	1	[EXC][EXE][EXK][EXN][OBT] [EXB/OBT]
20	529F2-42611	#*	SEAL,OIL	ｼｰﾙ	1	[EXC][EXE][EXK][EXN][OBT] [EXB/OBT]
21	NO PART NO.	#*	SEAL,DUST	ｼｰﾙ	1	[EXC][EXE][EXK][EXN][OBT] [EXB/OBT]
22	26094-17001		RING,RETAINING	ﾘﾝｸﾞ	1	[EXC][EXE][EXK][EXN][OBT] [EXB/OBT]
23	26314-17001		BUSHING,SEAL-GROUND	ﾌﾞｯｼﾝｸﾞ	1	[EXC][EXE][EXK][EXN][OBT] [EXB/OBT]
24	NO PART NO.	#*	O-RING	Oﾘﾝｸﾞ	2	[EXC][EXE][EXK][EXN][OBT] [EXB/OBT]

FIG.84 ORBITROL [EXC][EXE][EXK][EXN][OBT]

(F5H24130) オーピットロール

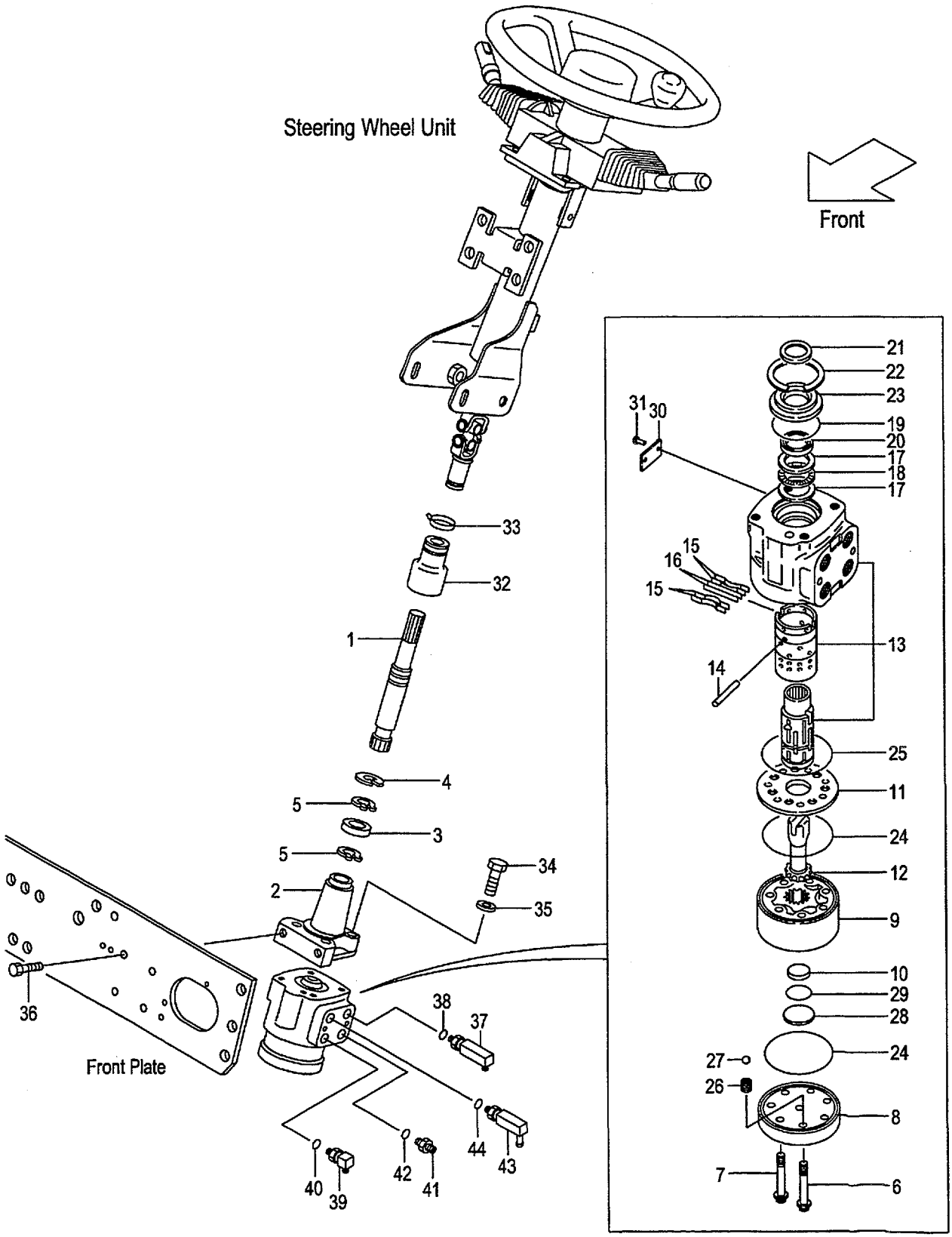

A:FG20C6H FG20T6H FG25C6H FG25T6H
B:FD20C6H FD20T6H FD25C6H FD25T6H

Item No	Part No.	Mark	Description		Req'd	Remarks : Serial No.
25	NO PART NO.	#*	O-RING	Oﾘﾝｸﾞ	1	[EXC][EXE][EXK][EXN][OBT] [EXB/OBT]
26	NO PART NO.		SCREW,ADAPTER	ｽｸﾘｭ	1	[EXC][EXE][EXK][EXN][OBT] [EXB/OBT]
27	524W2-42651		BALL	ﾎﾞｰﾙ	1	[EXC][EXE][EXK][EXN][OBT] [EXB/OBT]
28	514A2-42611		PLUG	ﾌﾟﾗｸﾞ	1	[EXC][EXE][EXK][EXN][OBT] [EXB/OBT]
29	514A2-42621	#*	O-RING	Oﾘﾝｸﾞ	1	[EXC][EXE][EXK][EXN][OBT] [EXB/OBT]
30	NO PART NO.	#	PLATE,NAME	ﾌﾟﾚｰﾄ	1	[EXC][EXE][EXK][EXN][OBT] [EXB/OBT]
31	NO PART NO.	#	RIVET	ﾘﾍﾞｯﾄ	2	[EXC][EXE][EXK][EXN][OBT] [EXB/OBT]
32	239A4-12211		BOOT,GEAR-BOX	ﾌﾞｰﾂ	1	[EXC][EXE][EXK][EXN][OBT] [EXB/OBT]
33	04913-11200		BAND	ﾊﾞﾝﾄﾞ	1	[EXC][EXE][EXK][EXN][OBT] [EXB/OBT]
34	80110-00628		BOLT	ﾎﾞﾙﾄ	4	[EXC][EXE][EXK][EXN][OBT] [EXB/OBT]
35	80430-00006		WASHER	ﾜｯｼｬ	4	[EXC][EXE][EXK][EXN][OBT] [EXB/OBT]
36	216G4-12251		BOLT	ﾎﾞﾙﾄ	2	[EXC][EXE][EXK][EXN][OBT] [EXB/OBT]
A2	23457-60301		ELBOW-ASSY	ｴﾙﾎﾞｱｯｾﾝ	1	[EXC][EXE][EXK][EXN][OBT] [EXB/OBT] INC.37,38
37	NO PART NO.	#	ELBOW	ｴﾙﾎﾞ	1	[EXC][EXE][EXK][EXN][OBT] [EXB/OBT]
38	89140-00006		O-RING	Oﾘﾝｸﾞ	1	[EXC][EXE][EXK][EXN][OBT] [EXB/OBT]
A3	23457-60311		ELBOW-ASSY	ｴﾙﾎﾞｱｯｾﾝ	1	[EXC][EXE][EXK][EXN][OBT] [EXB/OBT] INC.39,40
39	NO PART NO.	#	ELBOW	ｴﾙﾎﾞ	1	[EXC][EXE][EXK][EXN][OBT] [EXB/OBT]
40	89140-00006		O-RING	Oﾘﾝｸﾞ	1	[EXC][EXE][EXK][EXN][OBT] [EXB/OBT]
A4	22197-60231		NIPPLE-ASSY	ﾆｯﾌﾟﾙｱｯｾﾝ	1	[EXC][EXE][EXK][EXN][OBT] [EXB/OBT] INC.41,42
41	NO PART NO.	#	NIPPLE	ﾆｯﾌﾟﾙ	1	[EXC][EXE][EXK][EXN][OBT] [EXB/OBT]
42	89140-00006		O-RING	Oﾘﾝｸﾞ	1	[EXC][EXE][EXK][EXN][OBT] [EXB/OBT]
A5	516G2-40451		ELBOW-ASSY	ｴﾙﾎﾞｱｯｾﾝ	1	[EXC][EXE][EXK][EXN][OBT] [EXB/OBT] INC.43,44
43	NO PART NO.	#	ELBOW	ｴﾙﾎﾞ	1	[EXC][EXE][EXK][EXN][OBT] [EXB/OBT]
44	89140-00006		O-RING	Oﾘﾝｸﾞ	1	[EXC][EXE][EXK][EXN][OBT] [EXB/OBT]
K1	26094-17021		KIT,BRG,NEEDLE	ﾆｰﾄﾞﾙﾍﾞｱﾘﾝｸﾞｷｯﾄ	1	[EXC][EXE][EXK][EXN][OBT] [EXB/OBT] INC.17,18

FIG.84 ORBITROL [EXC][EXE][EXK][EXN][OBT]

(F5H24130) オーピットロール

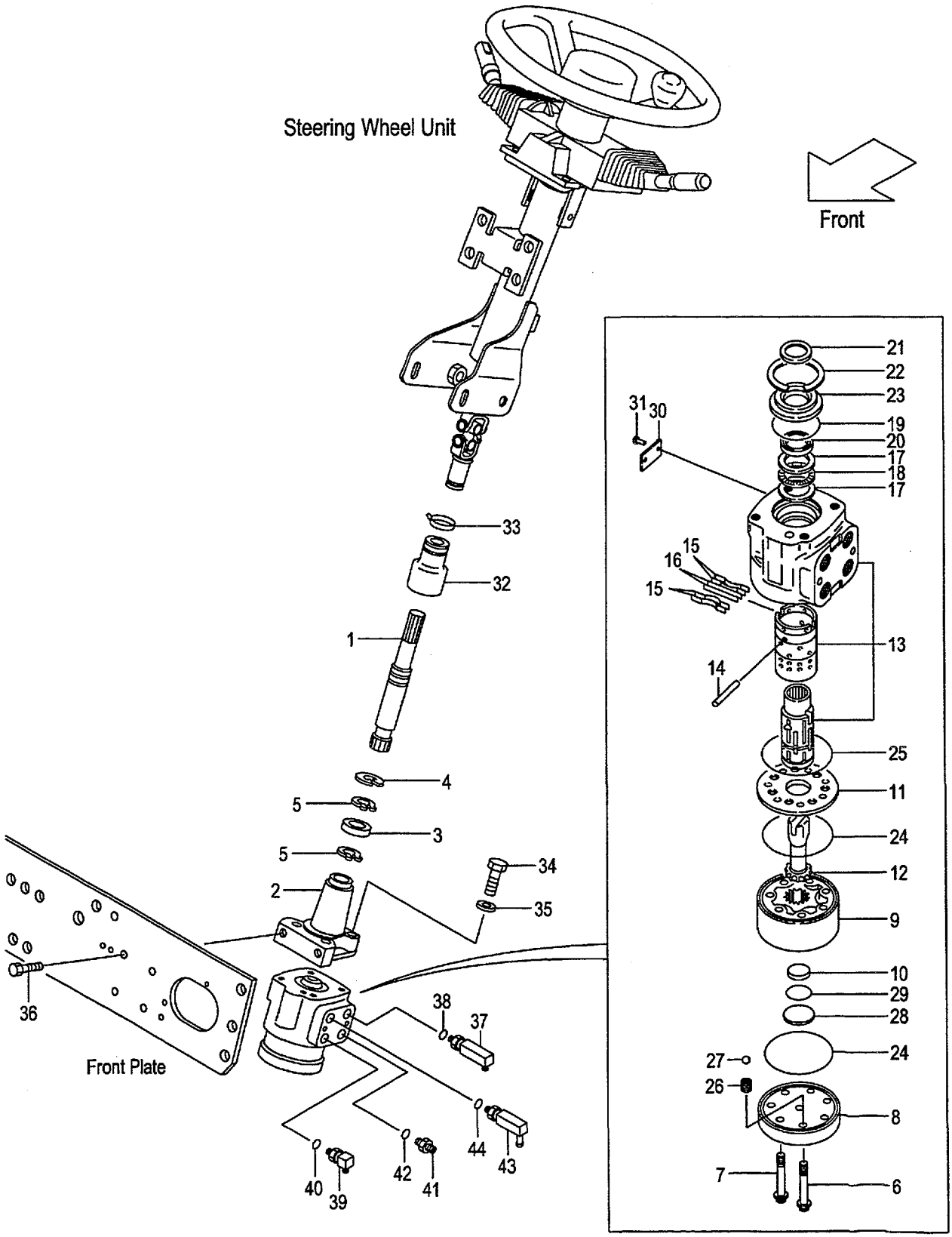

A:FG20C6H FG20T6H FG25C6H FG25T6H
B:FD20C6H FD20T6H FD25C6H FD25T6H

Item No	Part No.	Mark	Description	Req'd	Remarks : Serial No.
K2	516G2-42411		KIT,SEAL シールキット	1	[EXC&E&K&N][OBT][EXB/OBT] INC.19-21,24,25,29

FIG.85 DRAG LINK
(F5H24210) ﾄﾞﾗｯｸﾞﾘﾝｸ

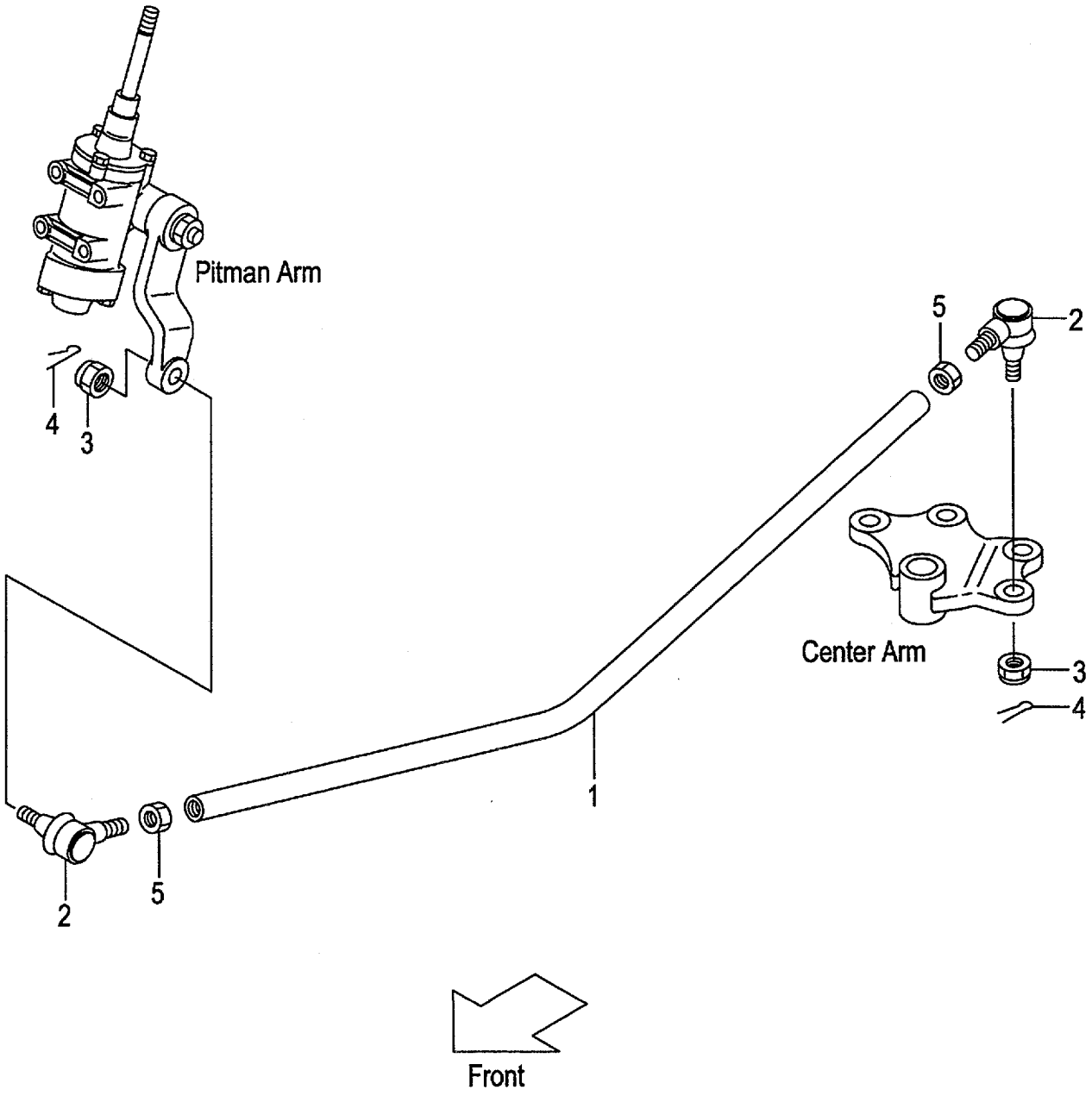

FIG.85
(F5H24210)

A:FG20C6H FG20T6H FG25C6H FG25T6H C:FD20C6H FD20T6H FD25C6H FD25T6H
B:FG20W6H FG25W6H D:FD20W6H FD25W6H

Item No	Part No.	Mark	Description		Req'd	Remarks : Serial No.
1	234A4-22101		LINK,DRAG	ﾘﾝｸ	1	(WITHOUT EXC,EXE,EXK,EXN, OBT,EXB/OBT)
-	234A4-22101		LINK,DRAG	ﾘﾝｸ	1	A,C [EXC/PSS][EXE/PSS][EXK/PSS] [EXN/PSS]
A1	24234-30551		END-ASSY,ROD,RH	ｴﾝﾄﾞｱｯｾﾝ	2	(WITHOUT EXC,EXE,EXK,EXN, OBT,EXB/OBT) INC.2-4
-	24234-30551		END-ASSY,ROD,RH	ｴﾝﾄﾞｱｯｾﾝ	2	A,C [EXC/PSS][EXE/PSS][EXK/PSS] [EXN/PSS] INC.2-4
2	NO PART NO.	#	END,ROD,RH	ｴﾝﾄﾞ	2	(WITHOUT EXC,EXE,EXK,EXN, OBT,EXB/OBT)
-	NO PART NO.	#	END,ROD,RH	ｴﾝﾄﾞ	2	A,C [EXC/PSS][EXE/PSS][EXK/PSS] [EXN/PSS]
3	01412-10016		NUT	ﾅｯﾄ	2	(WITHOUT EXC,EXE,EXK,EXN, OBT,EXB/OBT)
-	01412-10016		NUT	ﾅｯﾄ	2	A,C [EXC/PSS][EXE/PSS][EXK/PSS] [EXN/PSS]
4	02200-32032		PIN,COTTER	ﾋﾟﾝ	2	(WITHOUT EXC,EXE,EXK,EXN, OBT,EXB/OBT)
-	02200-32032		PIN,COTTER	ﾋﾟﾝ	2	A,C [EXC/PSS][EXE/PSS][EXK/PSS] [EXN/PSS]
5	01402-00022		NUT	ﾅｯﾄ	2	(WITHOUT EXC,EXE,EXK,EXN, OBT,EXB/OBT)
-	01402-00022		NUT	ﾅｯﾄ	2	A,C [EXC/PSS][EXE/PSS][EXK/PSS] [EXN/PSS]

FIG.86 STEERING AXLE

(F5H24310) ステアリング゛アクスル

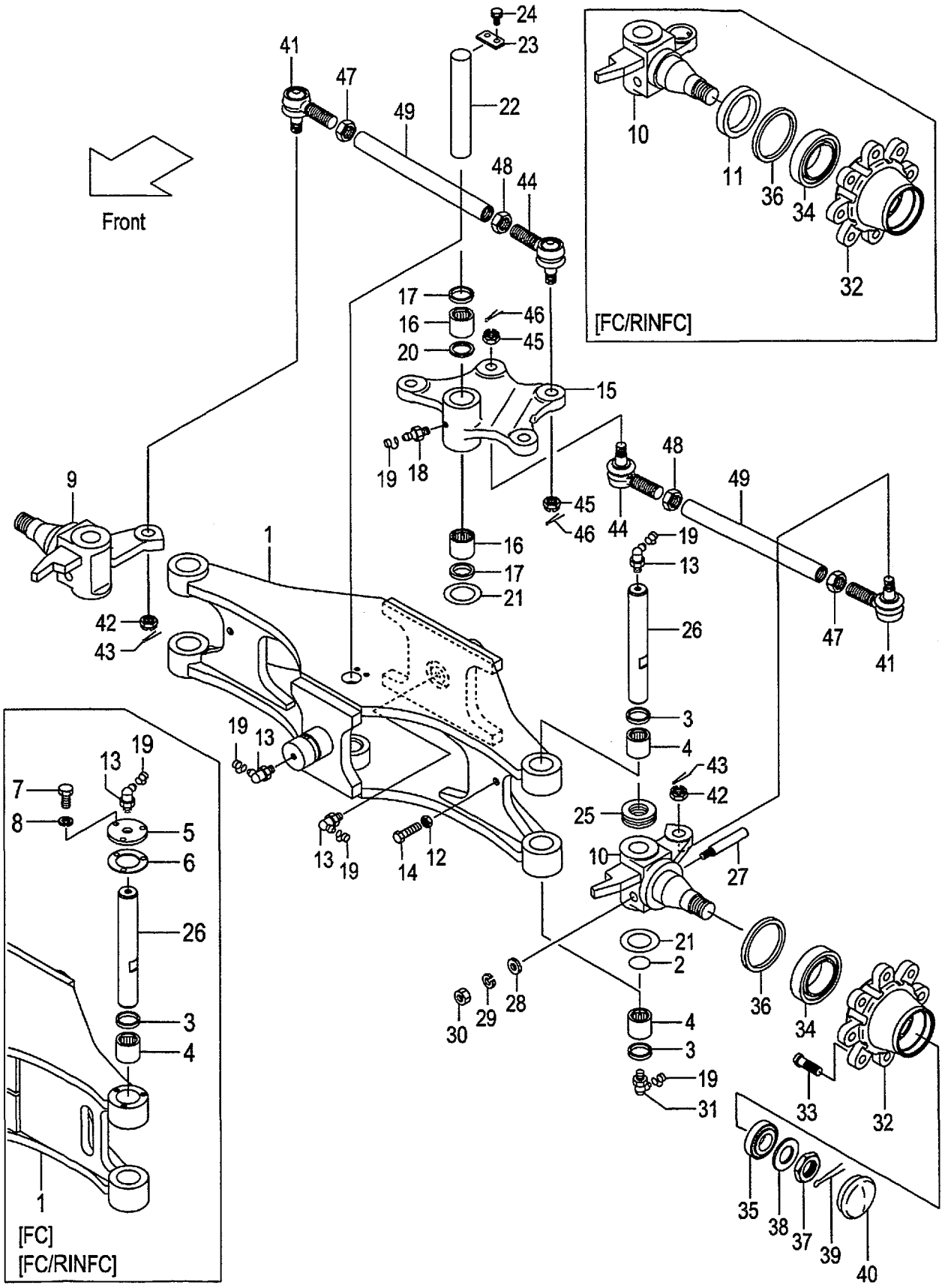

A:FG20C6H FG20T6H FG25C6H FG25T6H FG20W6H FG25W6H
B:FD20C6H FD20T6H FD25C6H FD25T6H FD20W6H FD25W6H

Item No	Part No.	Mark	Description		Req'd	Remarks : Serial No.
A1	234A4-30001		AXLE-ASSY,STEERING	ｽﾃｱﾘﾝｸﾞｱｸｽﾙｱｯｾﾝ	1	INC.1-4,9,10,12-49
-	534A3-70021		AXLE-ASSY,STEERING	ｽﾃｱﾘﾝｸﾞｱｸｽﾙｱｯｾﾝ	1	[FC] INC.1-10,12-49
-	534A3-70031		AXLE-ASSY,STEERING	ｽﾃｱﾘﾝｸﾞｱｸｽﾙｱｯｾﾝ	1	[FC/RINFC] INC.1-49
1	234A4-30111		AXLE,STEERING	ｱｸｽﾙ	1	
-	534A3-70101		AXLE,STEERING	ｱｸｽﾙ	1	[FC][FC/RINFC]
2	23654-32161	*	O-RING	Oﾘﾝｸﾞ	2	
3	214A4-32161	*	SEAL,DUST	ｼｰﾙ	4	
4	03146-13201	*	BRG,NEEDLE	ﾍﾞｱﾘﾝｸﾞ	4	
5	514A3-72052		PLATE,CAP	ﾌﾟﾚｰﾄ	2	[FC][FC/RINFC]
6	514A3-72062		PACKING	ﾊﾟｯｷﾝｸﾞ	2	[FC][FC/RINFC]
7	01141-06012		BOLT	ﾎﾞﾙﾄ	6	[FC][FC/RINFC]
8	02010-10006		WASHER	ﾜｯｼｬ	6	[FC][FC/RINFC]
9	234A4-32261		KNUCKLE,RH	ﾅｯｸﾙ	1	
-	534A3-72111		KNUCKLE,RH	ﾅｯｸﾙ	1	[FC/RINFC]
10	234A4-32271		KNUCKLE,LH	ﾅｯｸﾙ	1	
-	534A3-72121		KNUCKLE,LH	ﾅｯｸﾙ	1	[FC/RINFC]
11	514A3-72211		SEAT,OIL-SEAL	ｼｰﾄ	2	[FC/RINFC]
12	01402-00012		NUT	ﾅｯﾄ	2	
13	04901-00190	*	FITTING	ﾌｨｯﾃｨﾝｸﾞ	4	
14	01100-12030		BOLT	ﾎﾞﾙﾄ	2	
15	24454-30512		ARM,CENTER	ｱｰﾑ	1	
16	03146-13201	*	BRG,NEEDLE	ﾍﾞｱﾘﾝｸﾞ	2	
17	23654-32081	*	SEAL,DUST	ｼｰﾙ	2	
18	04901-00100	*	FITTING	ﾌｨｯﾃｨﾝｸﾞ	1	
19	22199-12401		CAP,NIPPLE	ｷｬｯﾌﾟ	7	
20	24454-32391	*	SPACER	ｽﾍﾟｰｻ	1	
21	22214-30321	*	SHIM	ｼﾑ	7	
22	24454-32161		PIN,CENTER-ARM	ﾋﾟﾝ	1	
23	20224-30061	*	PLATE,SET	ﾌﾟﾚｰﾄ	1	
24	01183-08016	*	BOLT	ﾎﾞﾙﾄ	2	
25	03126-83201	*	BRG,THRUST	ﾍﾞｱﾘﾝｸﾞ	2	
26	24454-32232		KINGPIN	ｷﾝｸﾞﾋﾟﾝ	2	
-	514A3-72201		KINGPIN	ｷﾝｸﾞﾋﾟﾝ	2	[FC][FC/RINFC]
27	215E4-32341	*	PIN,LOCK	ﾋﾟﾝ	2	
28	02000-00010	*	WASHER	ﾜｯｼｬ	2	
29	02010-00010	*	WASHER	ﾜｯｼｬ	2	
30	01400-00010	*	NUT	ﾅｯﾄ	2	
31	04901-00191		FITTING	ﾌｨｯﾃｨﾝｸﾞ	2	
32	214A4-32041		HUB,REAR	ﾊﾌﾞ	2	
33	23654-32041		BOLT,HUB	ﾎﾞﾙﾄ	16	
34	03071-30211		BRG,TAPER-ROLLER	ﾍﾞｱﾘﾝｸﾞ	2	
35	03071-30207		BRG,TAPER-ROLLER	ﾍﾞｱﾘﾝｸﾞ	2	
36	03217-08501		SEAL,OIL	ｼｰﾙ	2	
37	01412-00030		NUT,CASTLE	ﾅｯﾄ	2	
38	02000-00030		WASHER	ﾜｯｼｬ	2	
39	02200-06055		PIN,COTTER	ﾋﾟﾝ	2	
40	214A4-32051		CAP	ｷｬｯﾌﾟ	2	
A2	24234-30551		END-ASSY,ROD,RH	ｴﾝﾄﾞｱｯｾﾝ	2	INC.41-43
41	NO PART NO.	#	END,ROD,RH	ｴﾝﾄﾞ	2	
42	01412-10016		NUT,CASTLE	ﾅｯﾄ	2	

FIG.86 STEERING AXLE

(F5H24310) ステアリング゛アクスル

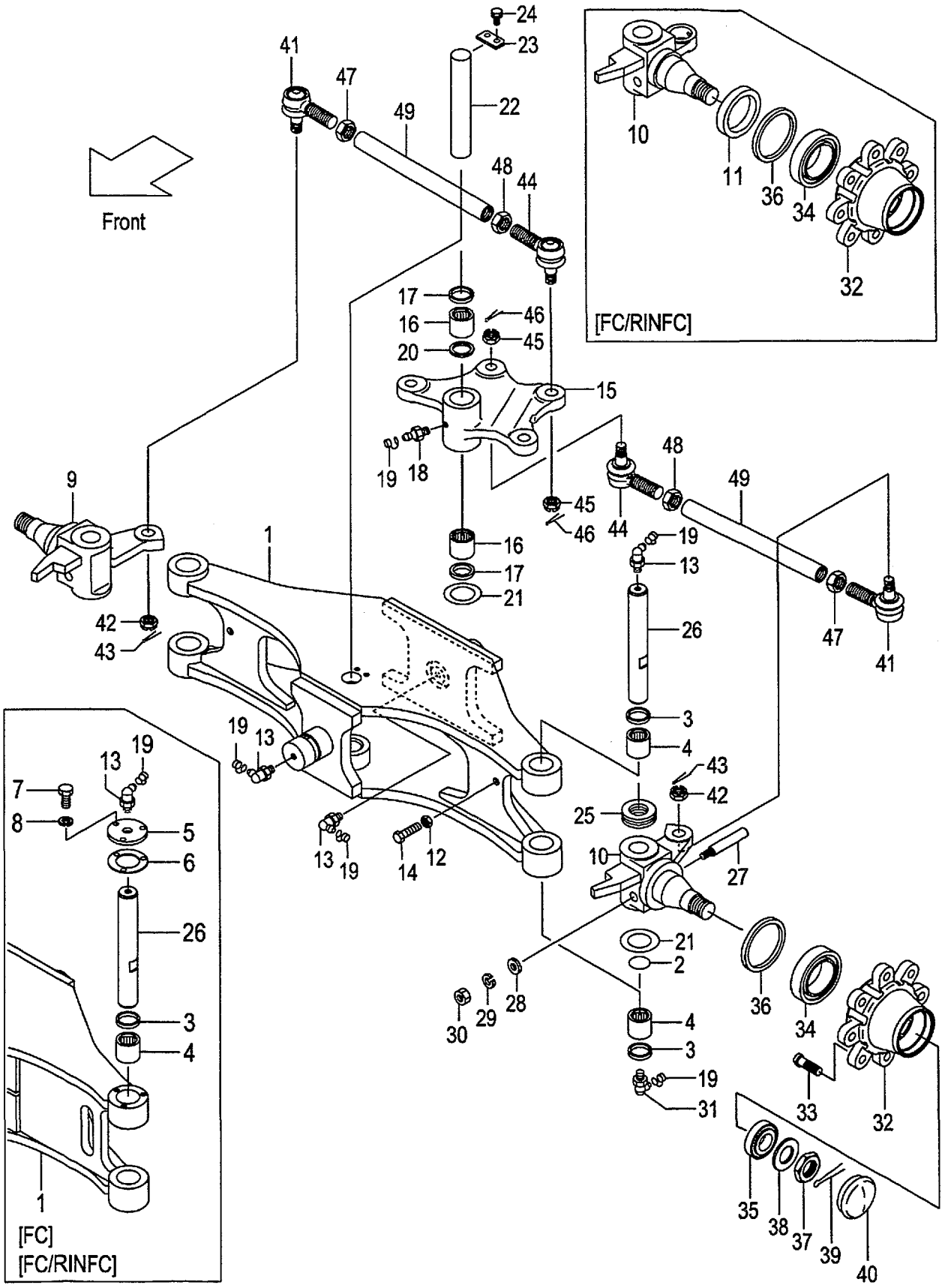

FIG.86
(F5H24310)

A:FG20C6H FG20T6H FG25C6H FG25T6H FG20W6H FG25W6H
B:FD20C6H FD20T6H FD25C6H FD25T6H FD20W6H FD25W6H

Item No	Part No.	Mark	Description		Req'd	Remarks : Serial No.
43	02200-32032		PIN,COTTER	ﾋﾟﾝ	2	
A3	24234-30561		END-ASSY,ROD,LH	ｴﾝﾄﾞｱｯｾﾝ	2	INC.44-46
44	NO PART NO.	#	END,ROD,LH	ｴﾝﾄﾞ	2	
45	01412-10016		NUT,CASTLE	ﾅｯﾄ	2	
46	02200-32032		PIN,COTTER	ﾋﾟﾝ	2	
47	24234-32411		NUT,RH	ﾅｯﾄ	2	
48	24234-32421		NUT,LH	ﾅｯﾄ	2	
49	214A4-32131		ROD,TIE	ﾛｯﾄﾞ	2	
K1	215E4-39801		KIT,REPAIR	ﾘﾍﾟｱｷｯﾄ	1	INC.2-4,13,21,25,27-30
K2	24454-39812		KIT,REPAIR	ﾘﾍﾟｱｷｯﾄ	1	INC.16-18,20,21,23,24

FIG.87 STEERING AXLE [EXC][EXE][EXK][EXN][OBT]

(F5H24320) ステアリング゛アクスル

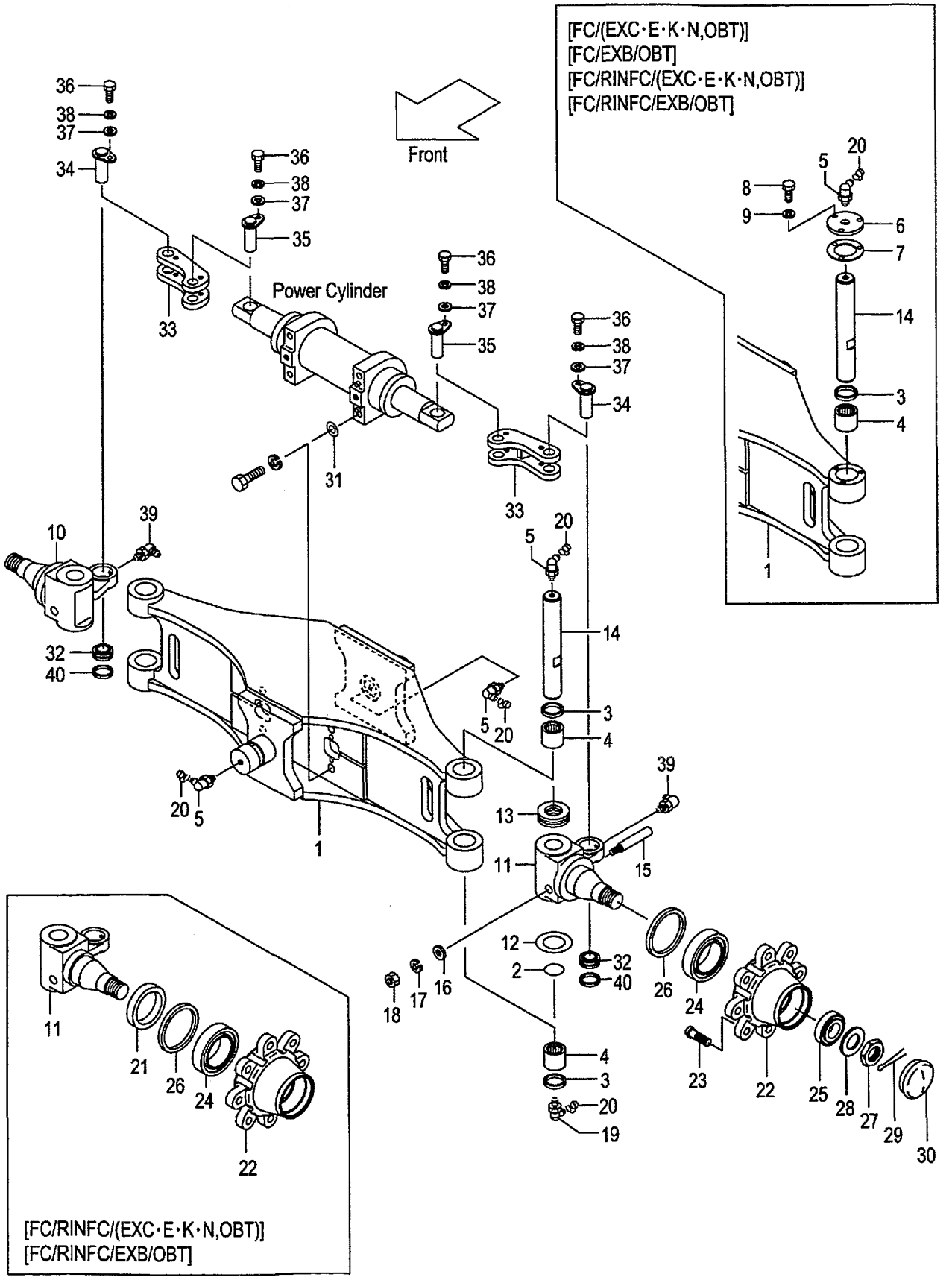

A:FG20C6H FG20T6H FG25C6H FG25T6H
B:FD20C6H FD20T6H FD25C6H FD25T6H

FIG.87
(F5H24320)

Item No	Part No.	Mark	Description		Req'd	Remarks : Serial No.
A1	533A2-40402		AXLE-ASSY,STEERING	ｽﾃｱﾘﾝｸﾞｱｸｽﾙｱｯｾﾝ	1	[EXC&E&K&N][OBT][EXB/OBT] INC.1-5,10-20,22-32
-	533A2-40502		AXLE-ASSY,STEERING	ｽﾃｱﾘﾝｸﾞｱｸｽﾙｱｯｾﾝ	1	[FC/EXC&E&K&N][FC/OBT] [FC/EXB/OBT] INC.1-20,22-32
-	533A2-40552		AXLE-ASSY,STEERING	ｽﾃｱﾘﾝｸﾞｱｸｽﾙｱｯｾﾝ	1	[FC/RINFC/EXC&E&K&N] INC.1-32
-	533A2-40552		AXLE-ASSY,STEERING	ｽﾃｱﾘﾝｸﾞｱｸｽﾙｱｯｾﾝ	1	[FC/RINFC/OBT] [FC/RINFC/EXB/OBT] INC.1-32
1	514A2-40104		AXLE,STEERING	ｱｸｽﾙ	1	[EXC&E&K&N][OBT][EXB/OBT]
-	514A2-44022		AXLE,STEERING	ｱｸｽﾙ	1	[FC/EXC&E&K&N][FC/OBT] [FC/EXB/OBT]
-	514A2-44022		AXLE,STEERING	ｱｸｽﾙ	1	[FC/RINFC/EXC&E&K&N]
-	514A2-44022		AXLE,STEERING	ｱｸｽﾙ	1	[FC/RINFC/OBT] [FC/RINFC/EXB/OBT]
2	23654-32161	*	O-RING	Oﾘﾝｸﾞ	2	[EXC&E&K&N][OBT][EXB/OBT]
3	214A4-32161	*	SEAL,DUST	ｼｰﾙ	4	[EXC&E&K&N][OBT][EXB/OBT]
4	03146-13201	*	BRG,NEEDLE	ﾍﾞｱﾘﾝｸﾞ	4	[EXC&E&K&N][OBT][EXB/OBT]
5	04901-00190	*	FITTING	ﾌｨｯﾃｨﾝｸﾞ	4	[EXC&E&K&N][OBT][EXB/OBT]
6	514A3-72052		PLATE,CAP	ﾌﾟﾚｰﾄ	2	[FC/EXC&E&K&N][FC/OBT] [FC/EXB/OBT]
-	514A3-72052		PLATE,CAP	ﾌﾟﾚｰﾄ	2	[FC/RINFC/EXC&E&K&N]
-	514A3-72052		PLATE,CAP	ﾌﾟﾚｰﾄ	2	[FC/RINFC/OBT] [FC/RINFC/EXB/OBT]
7	514A3-72062		PACKING	ﾊﾟｯｷﾝｸﾞ	2	[FC/EXC&E&K&N][FC/OBT] [FC/EXB/OBT]
-	514A3-72062		PACKING	ﾊﾟｯｷﾝｸﾞ	2	[FC/RINFC/EXC&E&K&N]
-	514A3-72062		PACKING	ﾊﾟｯｷﾝｸﾞ	2	[FC/RINFC/OBT] [FC/RINFC/EXB/OBT]
8	01141-06012		BOLT	ﾎﾞﾙﾄ	6	[FC/EXC&E&K&N][FC/OBT] [FC/EXB/OBT]
-	01141-06012		BOLT	ﾎﾞﾙﾄ	6	[FC/RINFC/EXC&E&K&N]
-	01141-06012		BOLT	ﾎﾞﾙﾄ	6	[FC/RINFC/OBT] [FC/RINFC/EXB/OBT]
9	02010-10006		WASHER	ﾜｯｼｬ	6	[FC/EXC&E&K&N][FC/OBT] [FC/EXB/OBT]
-	02010-10006		WASHER	ﾜｯｼｬ	6	[FC/RINFC/EXC&E&K&N]
-	02010-10006		WASHER	ﾜｯｼｬ	6	[FC/RINFC/OBT] [FC/RINFC/EXB/OBT]
10	533A2-42032		KNUCKLE,RH	ﾅｯｸﾙ	1	[EXC&E&K&N][OBT][EXB/OBT]
-	533A2-42202		KNUCKLE,RH	ﾅｯｸﾙ	1	[FC/RINFC/EXC&E&K&N]
-	533A2-42202		KNUCKLE,RH	ﾅｯｸﾙ	1	[FC/RINFC/OBT] [FC/RINFC/EXB/OBT]
11	533A2-42042		KNUCKLE,LH	ﾅｯｸﾙ	1	[EXC&E&K&N][OBT][EXB/OBT]
-	533A2-42212		KNUCKLE,LH	ﾅｯｸﾙ	1	[FC/RINFC/EXC&E&K&N]
-	533A2-42212		KNUCKLE,LH	ﾅｯｸﾙ	1	[FC/RINFC/OBT] [FC/RINFC/EXB/OBT]
12	22214-30321	*	SHIM	ｼﾑ	6	[EXC&E&K&N][OBT][EXB/OBT]
13	03126-83201	*	BRG,THRUST	ﾍﾞｱﾘﾝｸﾞ	2	[EXC&E&K&N][OBT][EXB/OBT]
14	24454-32232		KINGPIN	ｷﾝｸﾞﾋﾟﾝ	2	[EXC&E&K&N][OBT][EXB/OBT]
-	514A2-44071		KINGPIN	ｷﾝｸﾞﾋﾟﾝ	2	[FC/EXC&E&K&N][FC/OBT] [FC/EXB/OBT]

FIG.87 STEERING AXLE [EXC][EXE][EXK][EXN][OBT]

(F5H24320) ステアリング゛アクスル

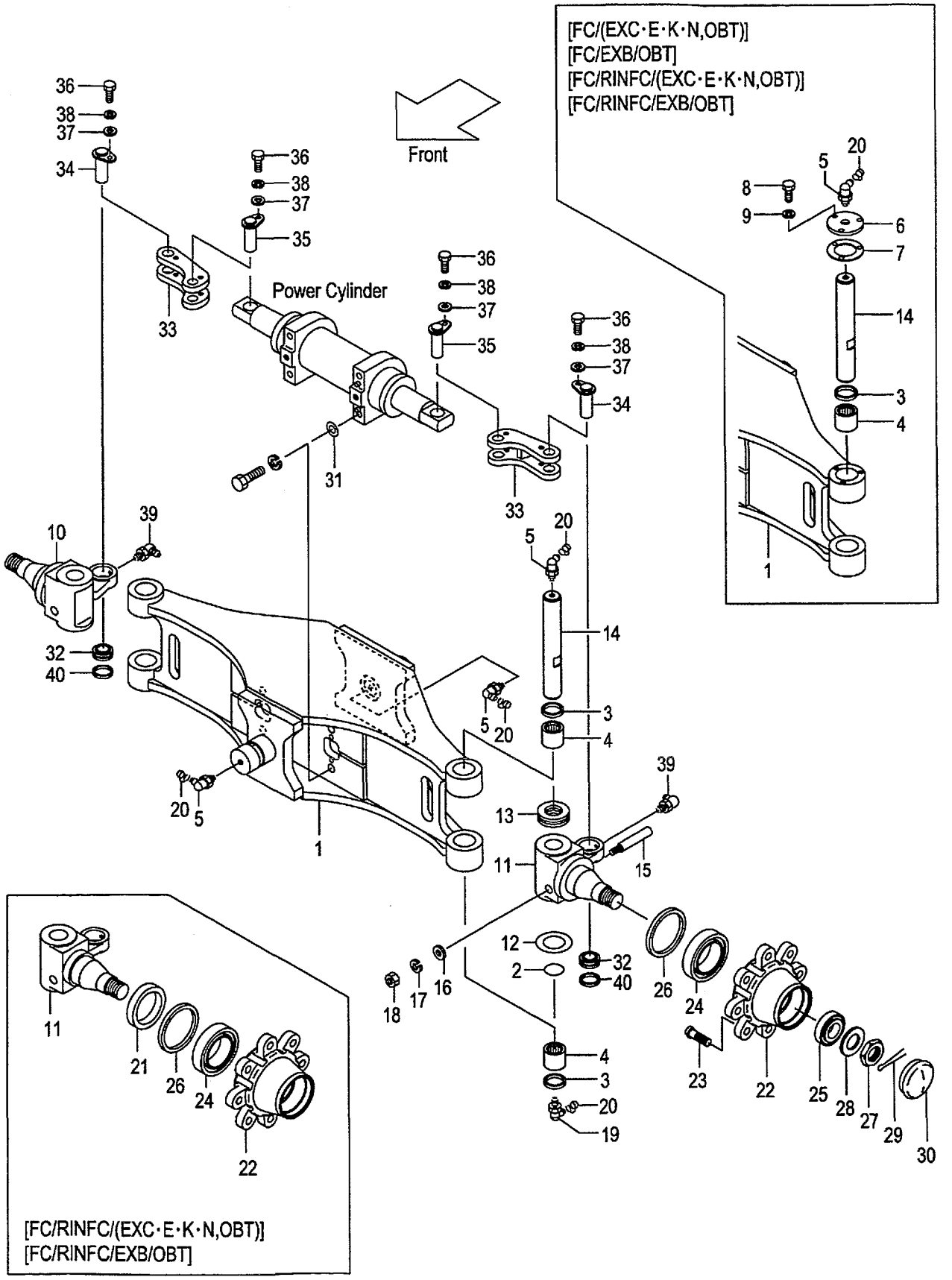

A:FG20C6H FG20T6H FG25C6H FG25T6H
B:FD20C6H FD20T6H FD25C6H FD25T6H

Item No	Part No.	Mark	Description		Req'd	Remarks : Serial No.
-	514A2-44071		KINGPIN	ｷﾝｸﾞﾋﾟﾝ	2	[FC/RINFC/EXC&E&K&N]
-	514A2-44071		KINGPIN	ｷﾝｸﾞﾋﾟﾝ	2	[FC/RINFC/OBT]
						[FC/RINFC/EXB/OBT]
15	215E4-32341	*	PIN,LOCK	ﾋﾟﾝ	2	[EXC&E&K&N][OBT][EXB/OBT]
16	02000-00010	*	WASHER	ﾜｯｼｬ	2	[EXC&E&K&N][OBT][EXB/OBT]
17	02010-00010	*	WASHER	ﾜｯｼｬ	2	[EXC&E&K&N][OBT][EXB/OBT]
18	01400-00010	*	NUT	ﾅｯﾄ	2	[EXC&E&K&N][OBT][EXB/OBT]
19	04901-00191	*	FITTING	ﾌｨｯﾃｨﾝｸﾞ	2	[EXC&E&K&N][OBT][EXB/OBT]
20	22199-12401		CAP,NIPPLE	ｷｬｯﾌﾟ	6	[EXC&E&K&N][OBT][EXB/OBT]
21	514A3-72211		SEAT,OIL-SEAL	ｼｰﾄ	2	[FC/RINFC/EXC&E&K&N]
-	514A3-72211		SEAT,OIL-SEAL	ｼｰﾄ	2	[FC/RINFC/OBT]
						[FC/RINFC/EXB/OBT]
22	214A4-32041		HUB,REAR	ﾊﾌﾞ	2	[EXC&E&K&N][OBT][EXB/OBT]
23	23654-32041		BOLT,HUB	ﾎﾞﾙﾄ	16	[EXC&E&K&N][OBT][EXB/OBT]
24	03071-30211		BRG,TAPER-ROLLER	ﾍﾞｱﾘﾝｸﾞ	2	[EXC&E&K&N][OBT][EXB/OBT]
25	03071-30207		BRG,TAPER-ROLLER	ﾍﾞｱﾘﾝｸﾞ	2	[EXC&E&K&N][OBT][EXB/OBT]
26	03217-08501		SEAL,OIL	ｼｰﾙ	2	[EXC&E&K&N][OBT][EXB/OBT]
27	01412-00030		NUT,CASTLE	ﾅｯﾄ	2	[EXC&E&K&N][OBT][EXB/OBT]
28	02000-00030		WASHER	ﾜｯｼｬ	2	[EXC&E&K&N][OBT][EXB/OBT]
29	02200-06055		PIN,COTTER	ﾋﾟﾝ	2	[EXC&E&K&N][OBT][EXB/OBT]
30	214A4-32051		CAP	ｷｬｯﾌﾟ	2	[EXC&E&K&N][OBT][EXB/OBT]
31	514A2-42481		SHIM,T-0.2	ｼﾑ	1	[EXC&E&K&N][OBT][EXB/OBT]
32	215E4-52231		JOINT,SPHERE-FACE	ｼﾞｮｲﾝﾄ	2	[EXC&E&K&N][OBT][EXB/OBT]
33	533A2-42071		YOKE	ﾖｰｸ	2	[EXC&E&K&N][OBT][EXB/OBT]
34	514A2-42721		PIN	ﾋﾟﾝ	2	[EXC&E&K&N][OBT][EXB/OBT]
35	533A2-42101		PIN	ﾋﾟﾝ	2	[EXC&E&K&N][OBT][EXB/OBT]
36	01103-08016		BOLT	ﾎﾞﾙﾄ	4	[EXC&E&K&N][OBT][EXB/OBT]
37	02000-00008		WASHER	ﾜｯｼｬ	4	[EXC&E&K&N][OBT][EXB/OBT]
38	02011-00008		WASHER	ﾜｯｼｬ	4	[EXC&E&K&N][OBT][EXB/OBT]
39	272A8-52101		NIPPLE,GREASE	ﾆｯﾌﾟﾙ	2	[EXC&E&K&N][OBT][EXB/OBT]
40	215E4-52301		COLLAR	ｶﾗｰ	2	[EXC&E&K&N][OBT][EXB/OBT]
K1	215E4-39801		KIT,REPAIR	ﾘﾍﾟｱｷｯﾄ	1	[EXC&E&K&N][OBT][EXB/OBT]
						INC.2-5,12,13,15-19

FIG.88 STEERING AXLE [(EXC,EXE,EXK,EXN)/PSS]

(F5H24330) ステアリングアクスル

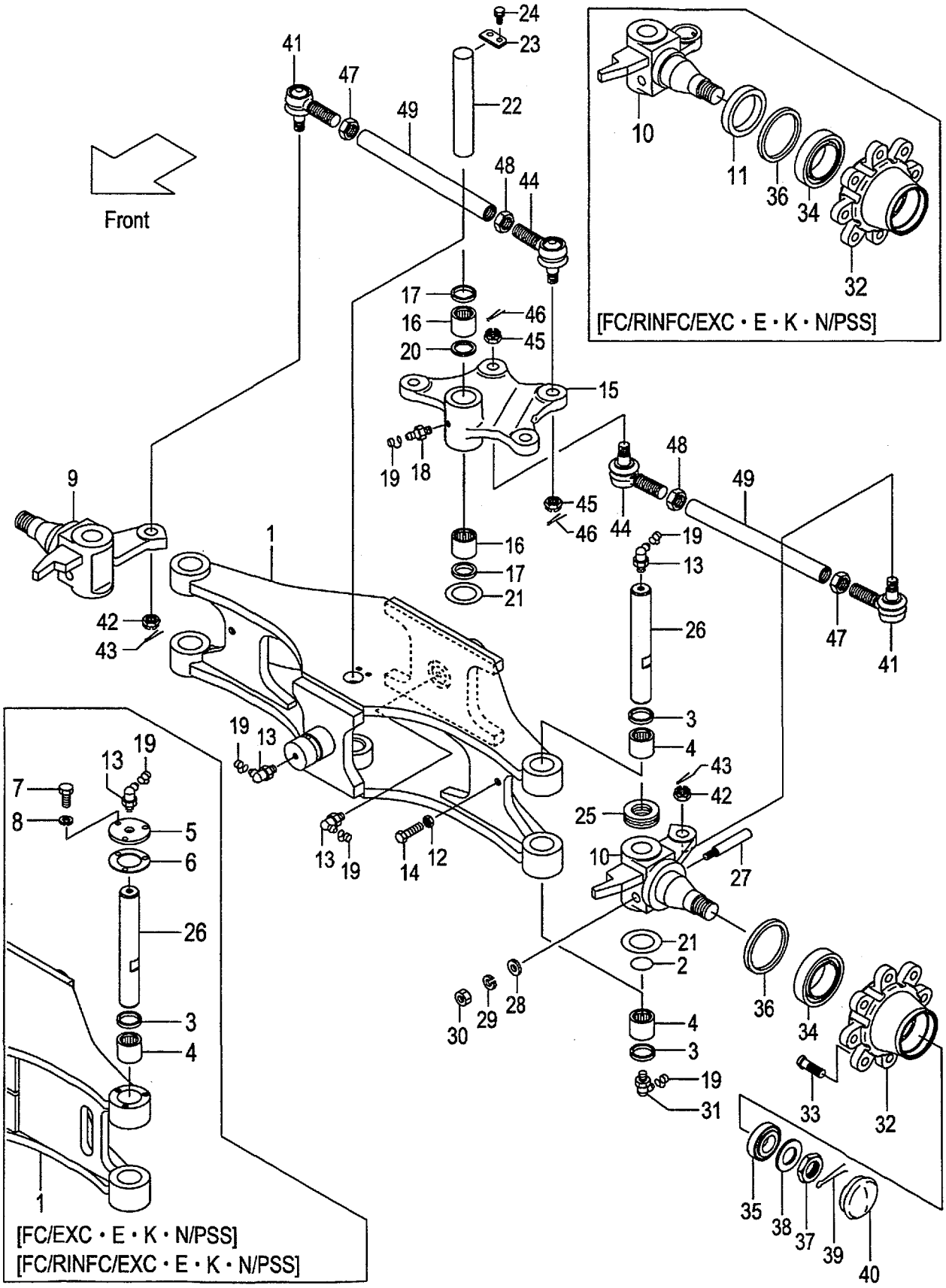

A:FG20C6H FG20T6H FG25C6H FG25T6H
B:FD20C6H FD20T6H FD25C6H FD25T6H

FIG.88
(F5H24330)

Item No	Part No.	Mark	Description		Req'd	Remarks : Serial No.
A1	234A4-30001		AXLE-ASSY,STEERING	ｽﾃｱﾘﾝｸﾞｱｸｽﾙｱｯｾﾝ	1	[EXC&E&K&N/PSS]
						INC.1-4,9,10,12-49
-	534A3-70021		AXLE-ASSY,STEERING	ｽﾃｱﾘﾝｸﾞｱｸｽﾙｱｯｾﾝ	1	[FC/EXC&E&K&N/PSS]
						INC.1-10,12-49
-	534A3-70031		AXLE-ASSY,STEERING	ｽﾃｱﾘﾝｸﾞｱｸｽﾙｱｯｾﾝ	1	[FC/RINFC/EXC&E&K&N/PSS]
						INC.1-49
1	234A4-30111		AXLE,STEERING	ｱｸｽﾙ	1	[EXC&E&K&N/PSS]
-	534A3-70101		AXLE,STEERING	ｱｸｽﾙ	1	[FC/EXC&E&K&N/PSS]
						[FC/RINFC/EXC&E&K&N/PSS]
2	23654-32161	*	O-RING	Oﾘﾝｸﾞ	2	[EXC&E&K&N/PSS]
3	214A4-32161	*	SEAL,DUST	ｼｰﾙ	4	[EXC&E&K&N/PSS]
4	03146-13201	*	BRG,NEEDLE	ﾍﾞｱﾘﾝｸﾞ	4	[EXC&E&K&N/PSS]
5	514A3-72052		PLATE,CAP	ﾌﾟﾚｰﾄ	2	[FC/EXC&E&K&N/PSS]
						[FC/RINFC/EXC&E&K&N/PSS]
6	514A3-72062		PACKING	ﾊﾟｯｷﾝｸﾞ	2	[FC/EXC&E&K&N/PSS]
						[FC/RINFC/EXC&E&K&N/PSS]
7	01141-06012		BOLT	ﾎﾞﾙﾄ	6	[FC/EXC&E&K&N/PSS]
						[FC/RINFC/EXC&E&K&N/PSS]
8	02010-10006		WASHER	ﾜｯｼｬ	6	[FC/EXC&E&K&N/PSS]
						[FC/RINFC/EXC&E&K&N/PSS]
9	234A4-32261		KNUCKLE,RH	ﾅｯｸﾙ	1	[EXC&E&K&N/PSS]
-	534A3-72111		KNUCKLE,RH	ﾅｯｸﾙ	1	[FC/RINFC/EXC&E&K&N/PSS]
10	234A4-32271		KNUCKLE,LH	ﾅｯｸﾙ	1	[EXC&E&K&N/PSS]
-	534A3-72121		KNUCKLE,LH	ﾅｯｸﾙ	1	[FC/RINFC/EXC&E&K&N/PSS]
11	514A3-72211		SEAT,OIL-SEAL	ｼｰﾄ	2	[FC/RINFC/EXC&E&K&N/PSS]
12	01402-00012		NUT	ﾅｯﾄ	2	[EXC&E&K&N/PSS]
13	04901-00190	*	FITTING	ﾌｨｯﾃｨﾝｸﾞ	4	[EXC&E&K&N/PSS]
14	01100-12030		BOLT	ﾎﾞﾙﾄ	2	[EXC&E&K&N/PSS]
15	24454-30512		ARM,CENTER	ｱｰﾑ	1	[EXC&E&K&N/PSS]
16	03146-13201	*	BRG,NEEDLE	ﾍﾞｱﾘﾝｸﾞ	2	[EXC&E&K&N/PSS]
17	23654-32081	*	SEAL,DUST	ｼｰﾙ	2	[EXC&E&K&N/PSS]
18	04901-00100	*	FITTING	ﾌｨｯﾃｨﾝｸﾞ	1	[EXC&E&K&N/PSS]
19	22199-12401		CAP,NIPPLE	ｷｬｯﾌﾟ	7	[EXC&E&K&N/PSS]
20	24454-32391	*	SPACER	ｽﾍﾟｰｻ	1	[EXC&E&K&N/PSS]
21	22214-30321	*	SHIM	ｼﾑ	7	[EXC&E&K&N/PSS]
22	24454-32161		PIN,CENTER-ARM	ﾋﾟﾝ	1	[EXC&E&K&N/PSS]
23	20224-30061	*	PLATE,SET	ﾌﾟﾚｰﾄ	1	[EXC&E&K&N/PSS]
24	01183-08016	*	BOLT	ﾎﾞﾙﾄ	2	[EXC&E&K&N/PSS]
25	03126-83201	*	BRG,THRUST	ﾍﾞｱﾘﾝｸﾞ	2	[EXC&E&K&N/PSS]
26	24454-32232		KINGPIN	ｷﾝｸﾞﾋﾟﾝ	2	[EXC&E&K&N/PSS]
-	514A3-72201		KINGPIN	ｷﾝｸﾞﾋﾟﾝ	2	[FC/EXC&E&K&N/PSS]
						[FC/RINFC/EXC&E&K&N/PSS]
27	215E4-32341	*	PIN,LOCK	ﾋﾟﾝ	2	[EXC&E&K&N/PSS]
28	02000-00010	*	WASHER	ﾜｯｼｬ	2	[EXC&E&K&N/PSS]
29	02010-00010	*	WASHER	ﾜｯｼｬ	2	[EXC&E&K&N/PSS]
30	01400-00010	*	NUT	ﾅｯﾄ	2	[EXC&E&K&N/PSS]
31	04901-00191		FITTING	ﾌｨｯﾃｨﾝｸﾞ	2	[EXC&E&K&N/PSS]
32	214A4-32041		HUB,REAR	ﾊﾌﾞ	2	[EXC&E&K&N/PSS]
33	23654-32041		BOLT,HUB	ﾎﾞﾙﾄ	16	[EXC&E&K&N/PSS]
34	03071-30211		BRG,TAPER-ROLLER	ﾍﾞｱﾘﾝｸﾞ	2	[EXC&E&K&N/PSS]

FIG.88 STEERING AXLE [(EXC,EXE,EXK,EXN)/PSS]

(F5H24330) ステアリングアクスル

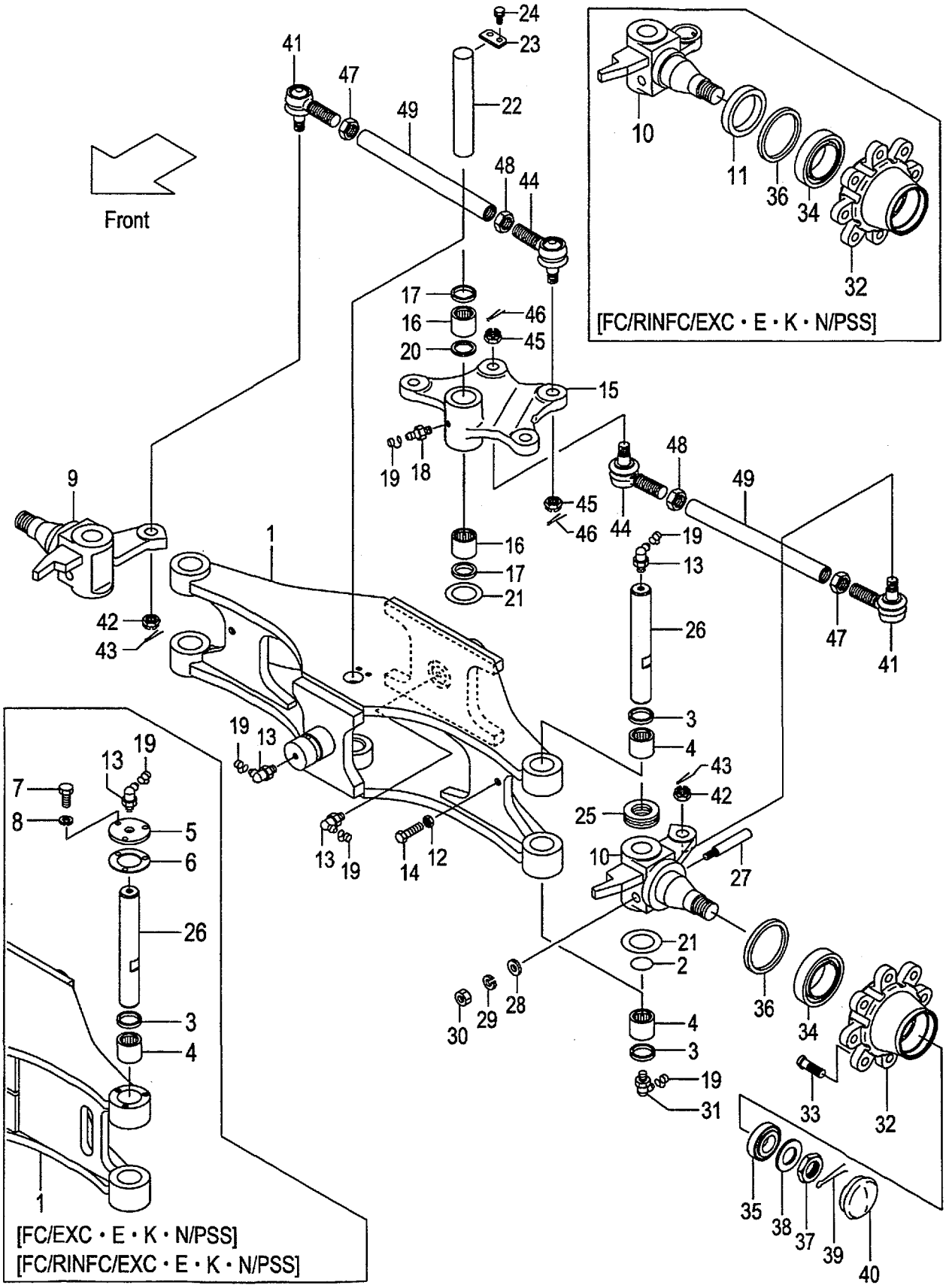

A:FG20C6H FG20T6H FG25C6H FG25T6H
B:FD20C6H FD20T6H FD25C6H FD25T6H

Item No	Part No.	Mark	Description		Req'd	Remarks : Serial No.
35	03071-30207		BRG,TAPER-ROLLER	ﾍﾞｱﾘﾝｸﾞ	2	[EXC&E&K&N/PSS]
36	03217-08501		SEAL,OIL	ｼｰﾙ	2	[EXC&E&K&N/PSS]
37	01412-00030		NUT,CASTLE	ﾅｯﾄ	2	[EXC&E&K&N/PSS]
38	02000-00030		WASHER	ﾜｯｼｬ	2	[EXC&E&K&N/PSS]
39	02200-06055		PIN,COTTER	ﾋﾟﾝ	2	[EXC&E&K&N/PSS]
40	214A4-32051		CAP	ｷｬｯﾌﾟ	2	[EXC&E&K&N/PSS]
A2	24234-30551		END-ASSY,ROD,RH	ｴﾝﾄﾞｱｯｾﾝ	2	[EXC&E&K&N/PSS] INC.41-43
41	NO PART NO.	#	END,ROD,RH	ｴﾝﾄﾞ	2	[EXC&E&K&N/PSS]
42	01412-10016		NUT,CASTLE	ﾅｯﾄ	2	[EXC&E&K&N/PSS]
43	02200-32032		PIN,COTTER	ﾋﾟﾝ	2	[EXC&E&K&N/PSS]
A3	24234-30561		END-ASSY,ROD,LH	ｴﾝﾄﾞｱｯｾﾝ	2	[EXC&E&K&N/PSS] INC.44-46
44	NO PART NO.	#	END,ROD,LH	ｴﾝﾄﾞ	2	[EXC&E&K&N/PSS]
45	01412-10016		NUT,CASTLE	ﾅｯﾄ	2	[EXC&E&K&N/PSS]
46	02200-32032		PIN,COTTER	ﾋﾟﾝ	2	[EXC&E&K&N/PSS]
47	24234-32411		NUT,RH	ﾅｯﾄ	2	[EXC&E&K&N/PSS]
48	24234-32421		NUT,LH	ﾅｯﾄ	2	[EXC&E&K&N/PSS]
49	214A4-32131		ROD,TIE	ﾛｯﾄﾞ	2	[EXC&E&K&N/PSS]
K1	215E4-39801		KIT,REPAIR	ﾘﾍﾟｱｷｯﾄ	1	[EXC&E&K&N/PSS] INC.2-4,13,21,25,27-30
K2	24454-39812		KIT,REPAIR	ﾘﾍﾟｱｷｯﾄ	1	[EXC&E&K&N/PSS] INC.16-18,20,21,23,24

FIG.89 AXLE SUPPORT
(F5H24360) アクスルサポート

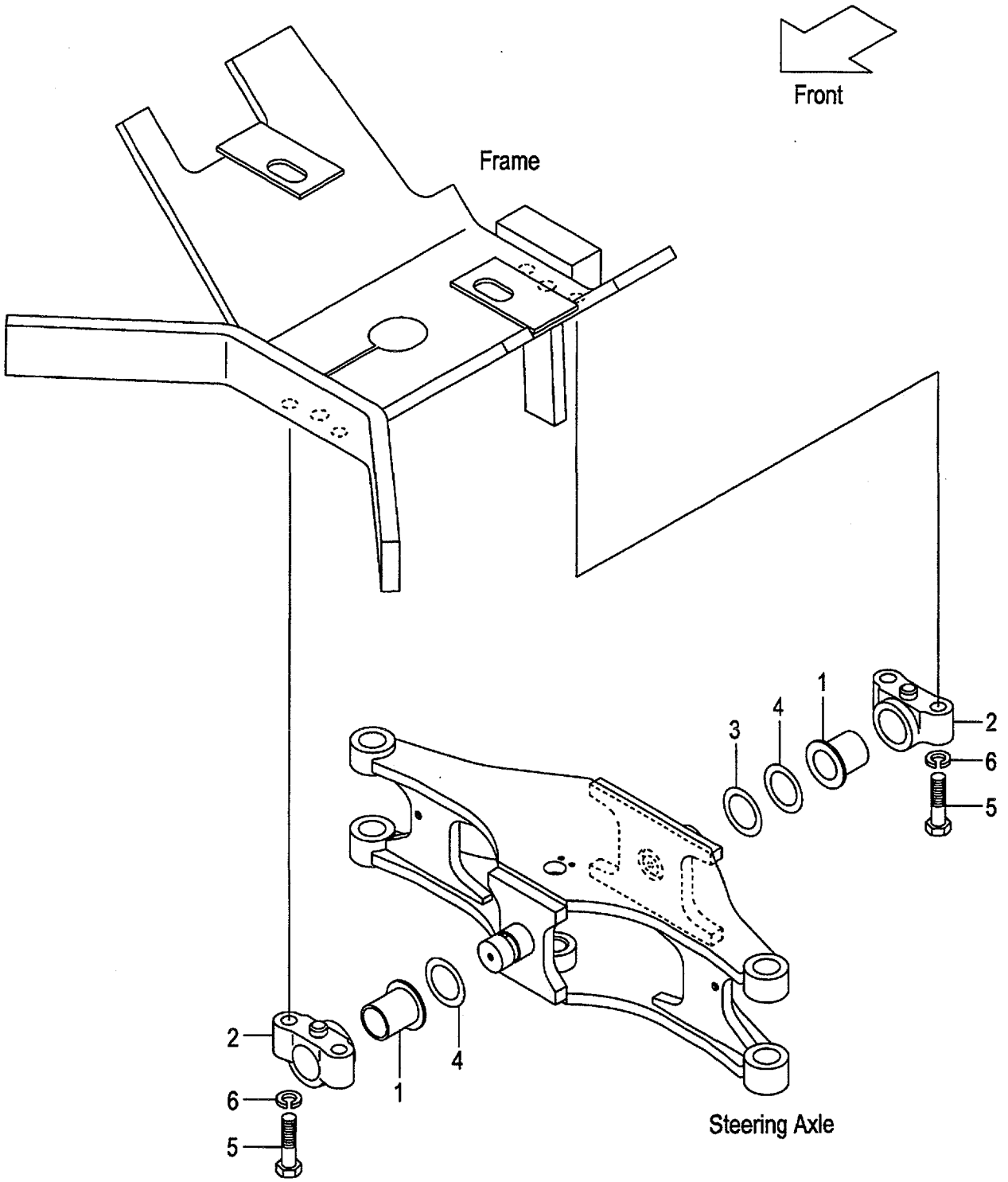

A:FG20C6H FG20T6H FG25C6H FG25T6H FG20W6H FG25W6H
B:FD20C6H FD20T6H FD25C6H FD25T6H FD20W6H FD25W6H

Item No	Part No.	Mark	Description		Req'd	Remarks : Serial No.
1	214A6-12601		BUSHING	ﾌﾞｯｼﾝｸﾞ	2	
2	214A6-12611		SUPPORT,REAR-AXLE	ｻﾎﾟｰﾄ	2	
3	214A4-32201		SHIM,T-0.5	ｼﾑ	1	
4	214A4-32211		SHIM,T-1.0	ｼﾑ	2	
5	01100-20080		BOLT	ﾎﾞﾙﾄ	4	
6	02010-00020		WASHER	ﾜｯｼｬ	4	

FIG.90 HUB NUT
(F5H24410) ﾊﾌﾞﾅｯﾄ

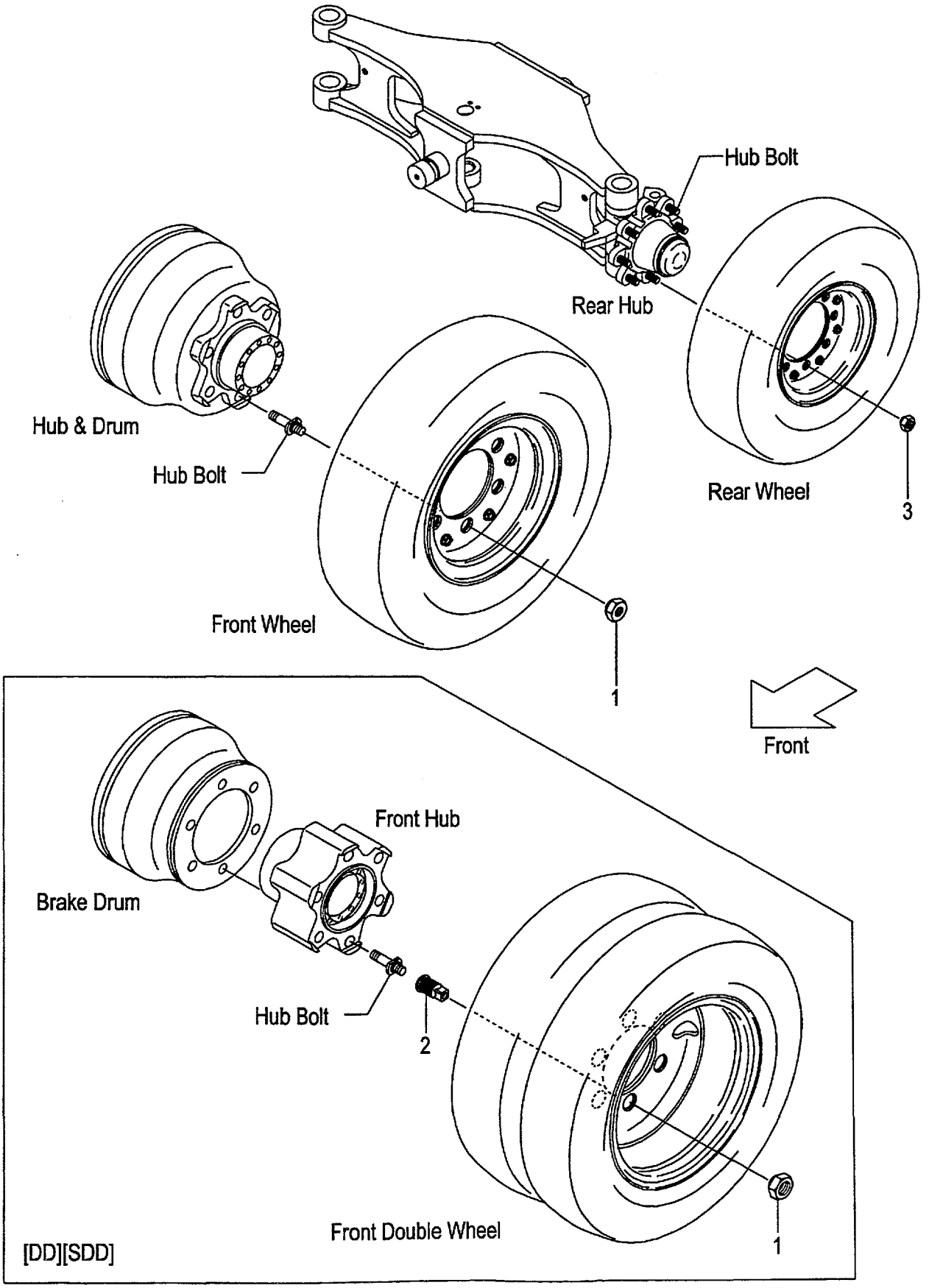

FIG.90
(F5H24410)

A:FG20C6H FG20T6H FG25C6H FG25T6H FG20W6H FG25W6H
B:FD20C6H FD20T6H FD25C6H FD25T6H FD20W6H FD25W6H

Item No	Part No.	Mark	Description		Req'd	Remarks : Serial No.
1	24354-32311		NUT,HUB	ﾅｯﾄ	12	(FRONT)
-	57045-52141		NUT,HUB	ﾅｯﾄ	12	[FC](FRONT)
-	23813-00081		NUT,HUB	ﾅｯﾄ	12	[DD][SDD](FRONT)
-	514A3-72101		NUT,HUB	ﾅｯﾄ	12	[FC/DD][FC/SDD](FRONT)
2	23813-00071		NUT,INNER	ﾅｯﾄ	12	[DD][SDD][FC/DD][FC/SDD] (FRONT)
3	23654-34051		NUT,HUB	ﾅｯﾄ	16	(REAR)
-	57045-52151		NUT,HUB	ﾅｯﾄ	16	[FC](REAR)

FIG.91 FENDER [DD][SDD][TUJSF]

(F5H24420) ﾌｪﾝﾀﾞ

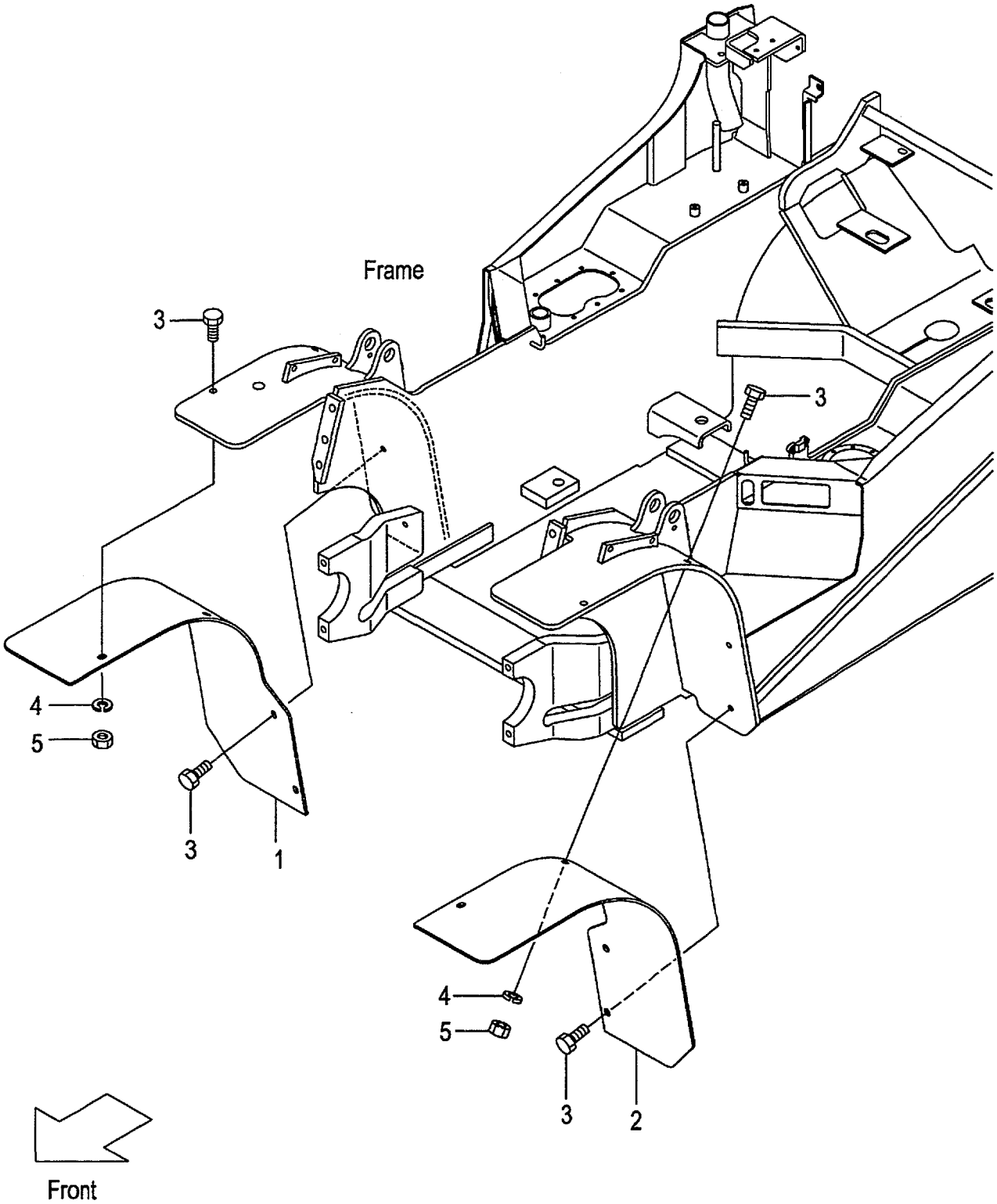

FIG.91
(F5H24420)

A:FG20C6H FG20T6H FG25C6H FG25T6H FG20W6H FG25W6H
B:FD20C6H FD20T6H FD25C6H FD25T6H FD20W6H FD25W6H

Item No	Part No.	Mark	Description		Req'd	Remarks : Serial No.
1	539A7-42001		FENDER,FRONT,RH	ﾌｪﾝﾀﾞ	1	[DD]
-	539A7-42021		FENDER,FRONT,RH	ﾌｪﾝﾀﾞ	1	[SDD]
-	539A7-42061		FENDER,FRONT,RH	ﾌｪﾝﾀﾞ	1	[TUJSF]
2	539A7-42011		FENDER,FRONT,LH	ﾌｪﾝﾀﾞ	1	[DD]
-	539A7-42031		FENDER,FRONT,LH	ﾌｪﾝﾀﾞ	1	[SDD]
-	539A7-42071		FENDER,FRONT,LH	ﾌｪﾝﾀﾞ	1	[TUJSF]
3	01186-10030		BOLT	ﾎﾞﾙﾄ	8	[DD][SDD][TUJSF]
4	02000-00010		WASHER	ﾜｯｼｬ	4	[DD][SDD][TUJSF]
5	01400-00010		NUT	ﾅｯﾄ	4	[DD][SDD][TUJSF]

FIG.92 FRONT WHEEL
(F5H24430) フロントホイール

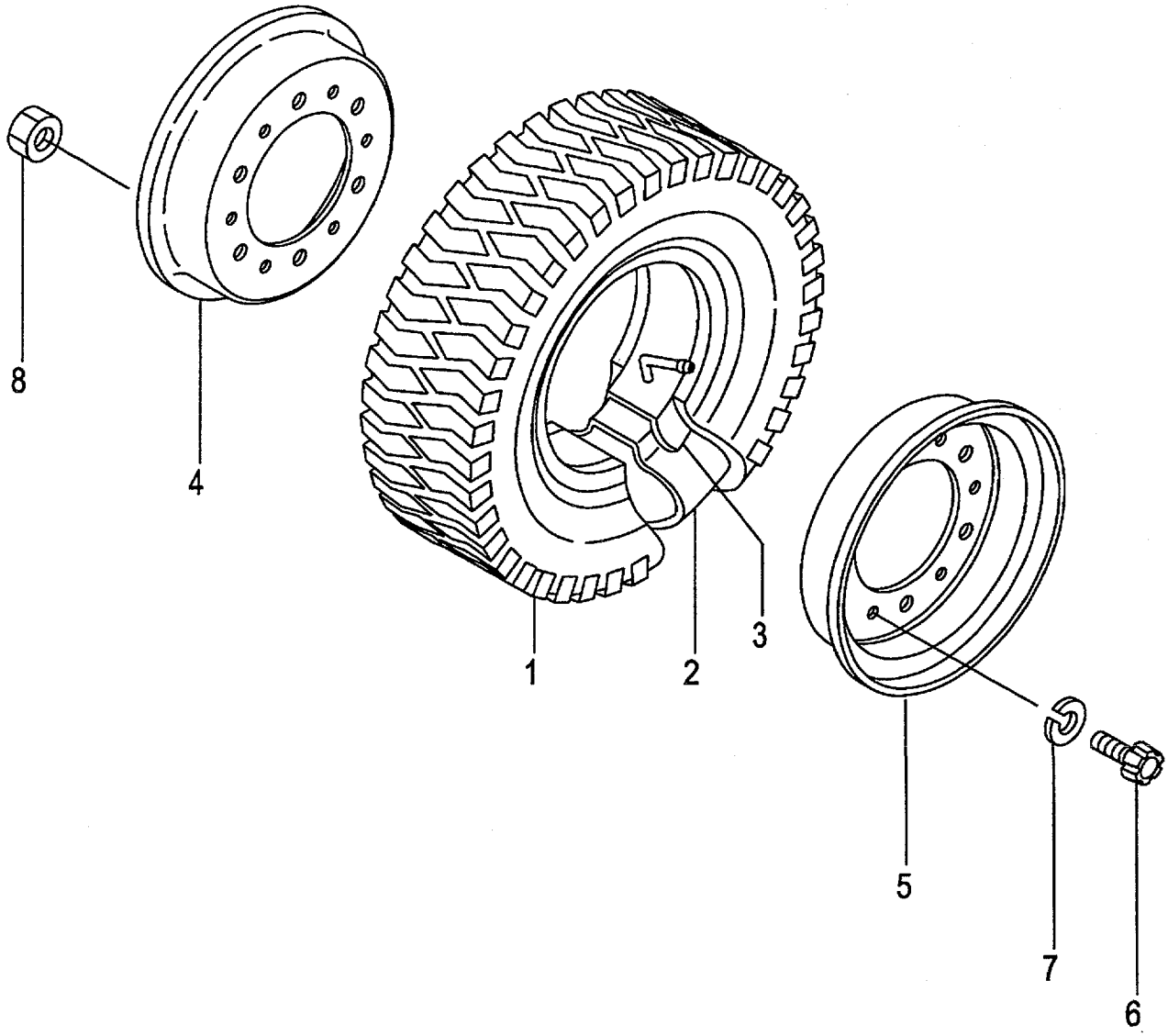

A:FG20C6H FG20T6H FG25C6H FG25T6H FG20W6H FG25W6H
B:FD20C6H FD20T6H FD25C6H FD25T6H FD20W6H FD25W6H

Item No	Part No.	Mark	Description		Req'd	Remarks : Serial No.
A1	53456-80902		WHEEL-ASSY,FRONT	ﾌﾛﾝﾄﾎｲｰﾙｱｯｾﾝ	2	INC.1-8
1	06006-70012		TIRE,700-12-12	ﾀｲﾔ	2	
2	06711-70012		TUBE,700-12-12T	ﾁｭｰﾌﾞ	2	
3	06701-70012		FLAP,700-12-12F	ﾌﾗｯﾌﾟ	2	
A2	23454-40501		RIM-ASSY,500S-12	ﾘﾑｱｯｾﾝ	2	INC.4-8
4	NO PART NO.	#	RIM,INSIDE	ﾘﾑ	2	
5	NO PART NO.	#	RIM,OUTSIDE	ﾘﾑ	2	
6	514A3-82601		BOLT	ﾎﾞﾙﾄ	12	
7	02011-00016		WASHER	ﾜｯｼｬ	12	
8	01400-10016		NUT	ﾅｯﾄ	12	

FIG.93 FRONT WHEEL [DR F]

(F5H24440) フロントホイール

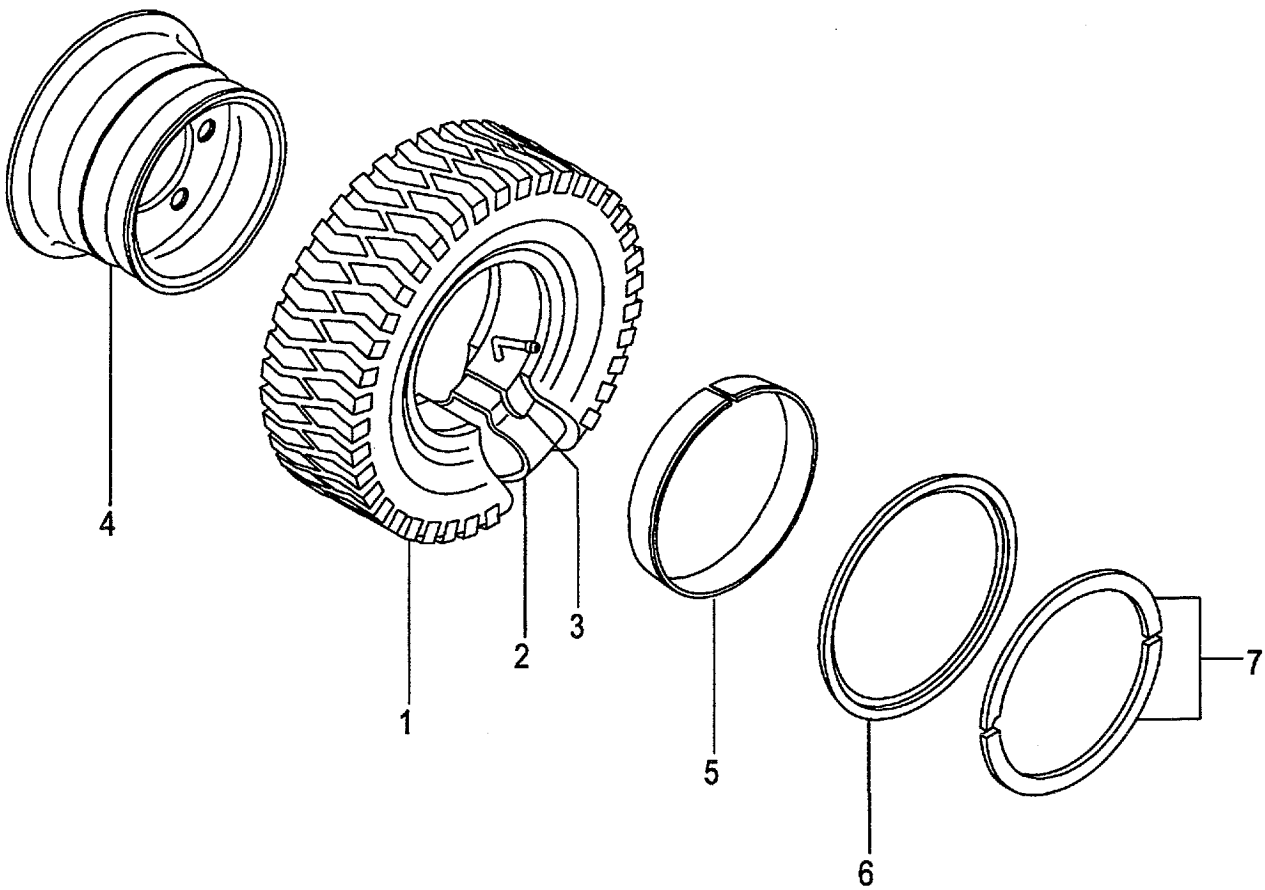

FIG.93
(F5H24440)

A:FG20C6H FG20T6H FG25C6H FG25T6H FG20W6H FG25W6H
B:FD20C6H FD20T6H FD25C6H FD25T6H FD20W6H FD25W6H

Item No	Part No.	Mark	Description		Req'd	Remarks : Serial No.
A1	53666-80601		WHEEL-ASSY,FRONT	ﾌﾛﾝﾄﾎｲｰﾙｱｯｾﾝ	2	[DR F] INC.1-7
1	06006-70012		TIRE,700-12-12	ﾀｲﾔ	2	[DR F]
2	06711-70012		TUBE,700-12-12T	ﾁｭｰﾌﾞ	2	[DR F]
3	06701-70012		FLAP,700-12-12F	ﾌﾗｯﾌﾟ	2	[DR F]
A2	53666-81801		RIM-ASSY,500S-12	ﾘﾑｱｯｾﾝ	2	[DR F] INC.4-7
4	NO PART NO.	#	RIM	ﾘﾑ	2	[DR F]
5	53656-82041		BAND	ﾊﾞﾝﾄﾞ	2	[DR F]
6	53656-82051		FLANGE,SIDE	ﾌﾗﾝｼﾞ	2	[DR F]
7	53656-82061		RING,LOCK	ﾘﾝｸﾞ	2	[DR F]

FIG.94 FRONT WHEEL [TJ F][TJSF][T F][TS F]

(F5H24450) フロントホイール

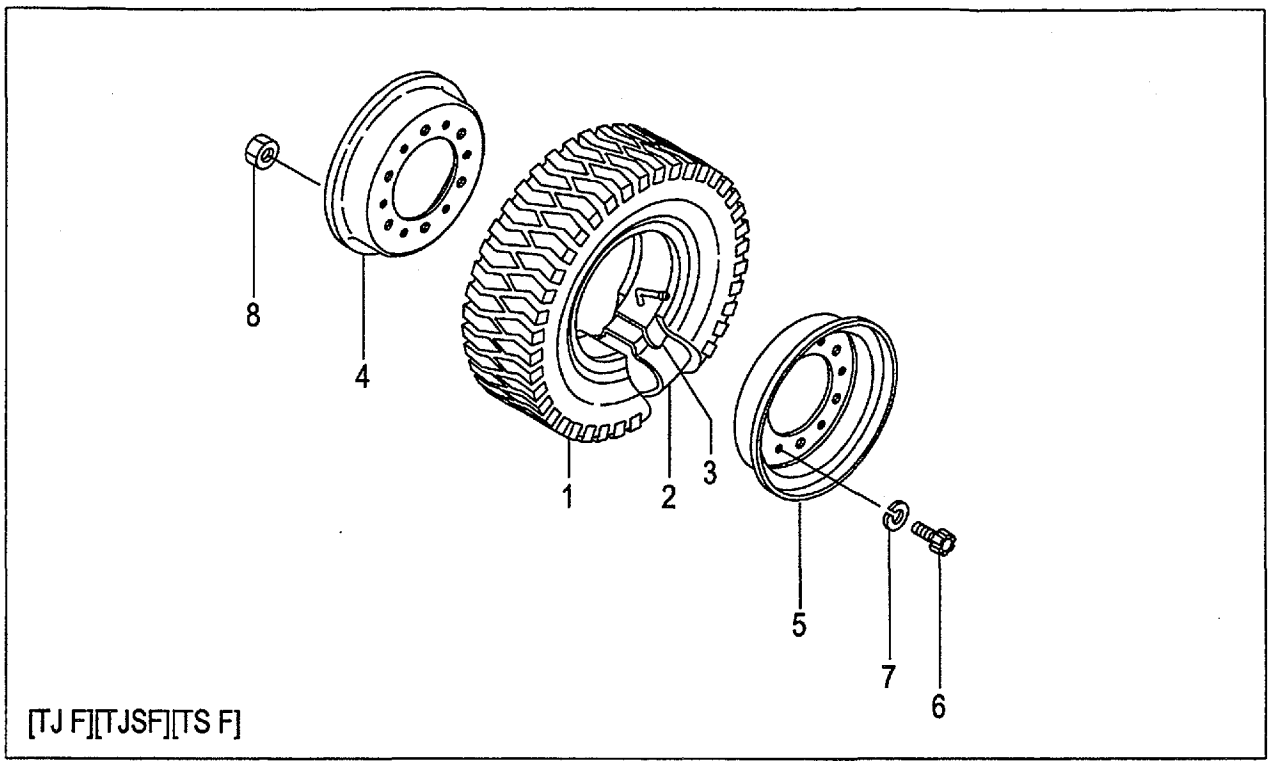

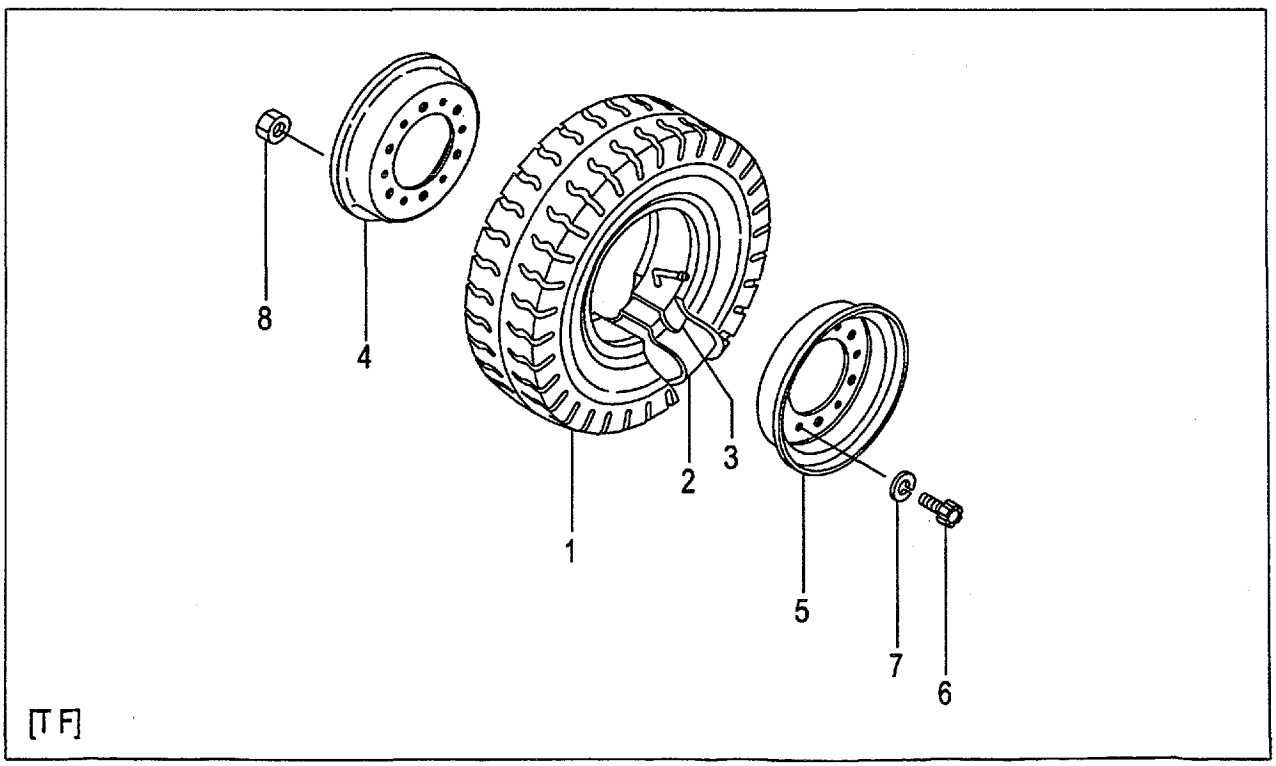

A:FG20C6H FG20T6H FG25C6H FG25T6H FG20W6H FG25W6H
B:FD20C6H FD20T6H FD25C6H FD25T6H FD20W6H FD25W6H

Item No	Part No.	Mark	Description		Req'd	Remarks : Serial No.
A1	53456-80902		WHEEL-ASSY,FRONT	ﾌﾛﾝﾄﾎｲｰﾙｱｯｾﾝ	2	[TJ F] INC.1-8
-	53456-80702		WHEEL-ASSY,FRONT	ﾌﾛﾝﾄﾎｲｰﾙｱｯｾﾝ	2	[TJSF] INC.1-8
-	23454-40601		WHEEL-ASSY,FRONT	ﾌﾛﾝﾄﾎｲｰﾙｱｯｾﾝ	2	[T F] INC.1-8
-	53456-80502		WHEEL-ASSY,FRONT	ﾌﾛﾝﾄﾎｲｰﾙｱｯｾﾝ	2	[TS F] INC.1-8
1	06006-70012		TIRE,700-12-12	ﾀｲﾔ	2	[TJ F]
-	06005-70012		TIRE,700-12-12	ﾀｲﾔ	2	[TJSF]
-	06001-70012		TIRE,700-12-12	ﾀｲﾔ	2	[T F]
-	06007-70012		TIRE,700-12-12	ﾀｲﾔ	2	[TS F]
2	06711-70012		TUBE,700-12-12T	ﾁｭｰﾌﾞ	2	[TJ F][TJSF][T F][TS F]
3	06701-70012		FLAP,700-12-12F	ﾌﾗｯﾌﾟ	2	[TJ F][TJSF][T F][TS F]
A2	23454-40501		RIM-ASSY,500S-12	ﾘﾑｱｯｾﾝ	2	[TJ F][TJSF][T F][TS F] INC.4-8
4	NO PART NO.	#	RIM,INSIDE	ﾘﾑ	2	[TJ F][TJSF][T F][TS F]
5	NO PART NO.	#	RIM,OUTSIDE	ﾘﾑ	2	[TJ F][TJSF][T F][TS F]
6	514A3-82601		BOLT	ﾎﾞﾙﾄ	12	[TJ F][TJSF][T F][TS F]
7	02011-00016		WASHER	ﾜｯｼｬ	12	[TJ F][TJSF][T F][TS F]
8	01400-10016		NUT	ﾅｯﾄ	12	[TJ F][TJSF][T F][TS F]

FIG.95 FRONT WHEEL [(TJ F,TJSF,T F,TS F)/DR F]

(F5H24460) フロントホイール

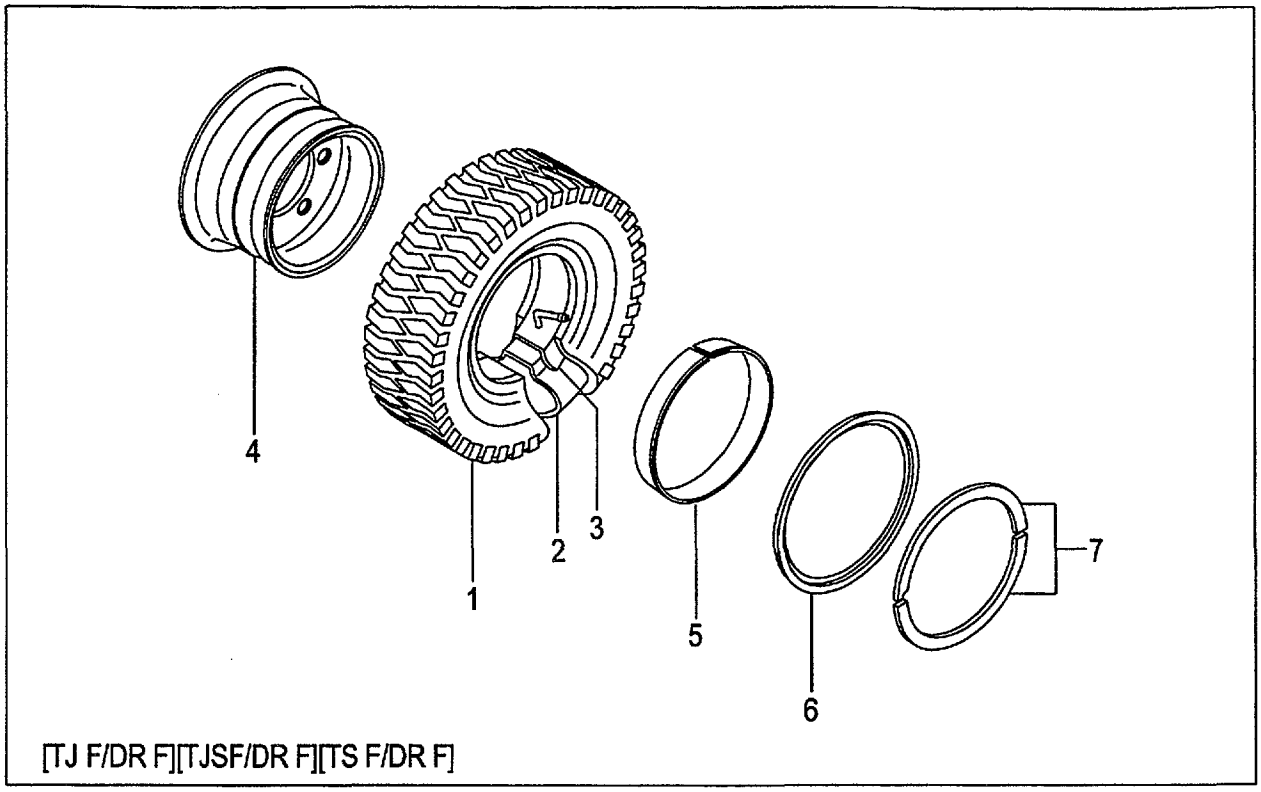

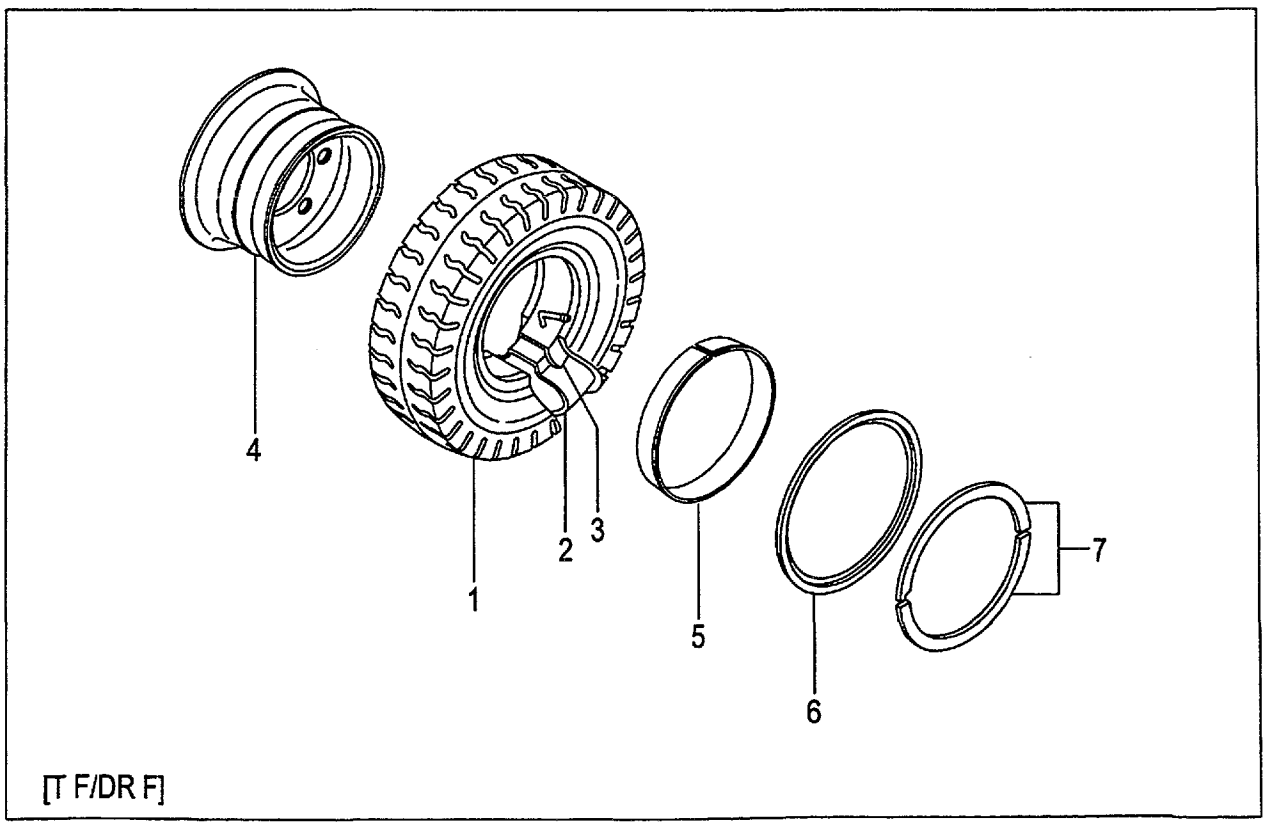

A:FG20C6H FG20T6H FG25C6H FG25T6H FG20W6H FG25W6H
B:FD20C6H FD20T6H FD25C6H FD25T6H FD20W6H FD25W6H

Item No	Part No.	Mark	Description		Req'd	Remarks : Serial No.
A1	53666-80601		WHEEL-ASSY,FRONT	ﾌﾛﾝﾄﾎｲｰﾙｱｯｾﾝ	2	[TJ F/DR F] INC.1-7
-	53666-80501		WHEEL-ASSY,FRONT	ﾌﾛﾝﾄﾎｲｰﾙｱｯｾﾝ	2	[TJSF/DR F] INC.1-7
-	53666-80201		WHEEL-ASSY,FRONT	ﾌﾛﾝﾄﾎｲｰﾙｱｯｾﾝ	2	[T F/DR F] INC.1-7
-	53666-80701		WHEEL-ASSY,FRONT	ﾌﾛﾝﾄﾎｲｰﾙｱｯｾﾝ	2	[TS F/DR F] INC.1-7
1	06006-70012		TIRE,700-12-12	ﾀｲﾔ	2	[TJ F/DR F]
-	06005-70012		TIRE,700-12-12	ﾀｲﾔ	2	[TJSF/DR F]
-	06001-70012		TIRE,700-12-12	ﾀｲﾔ	2	[T F/DR F]
-	06007-70012		TIRE,700-12-12	ﾀｲﾔ	2	[TS F/DR F]
2	06711-70012		TUBE,700-12-12T	ﾁｭｰﾌﾞ	2	[TJ F/DR F][TJSF/DR F] [T F/DR F][TS F/DR F]
3	06701-70012		FLAP,700-12-12F	ﾌﾗｯﾌﾟ	2	[TJ F/DR F][TJSF/DR F] [T F/DR F][TS F/DR F]
A2	53666-81801		RIM-ASSY,500S-12	ﾘﾑｱｯｾﾝ	2	[TJ F/DR F][T F/DR F] INC.4-7
-	53666-81801		RIM-ASSY,500S-12	ﾘﾑｱｯｾﾝ	2	[TJSF/DR F][TS F/DR F] INC.4-7
4	NO PART NO.	#	RIM	ﾘﾑ	2	[TJ F/DR F][TJSF/DR F] [T F/DR F][TS F/DR F]
5	53656-82041		BAND	ﾊﾞﾝﾄﾞ	2	[TJ F/DR F][TJSF/DR F] [T F/DR F][TS F/DR F]
6	53656-82051		FLANGE,SIDE	ﾌﾗﾝｼﾞ	2	[TJ F/DR F][TJSF/DR F] [T F/DR F][TS F/DR F]
7	53656-82061		RING,LOCK	ﾘﾝｸﾞ	2	[TJ F/DR F][TJSF/DR F] [T F/DR F][TS F/DR F]

FIG.96 FRONT WHEEL [TUJF][TUSF][TUWF][TUGF]

(F5H24470) フロントホイール

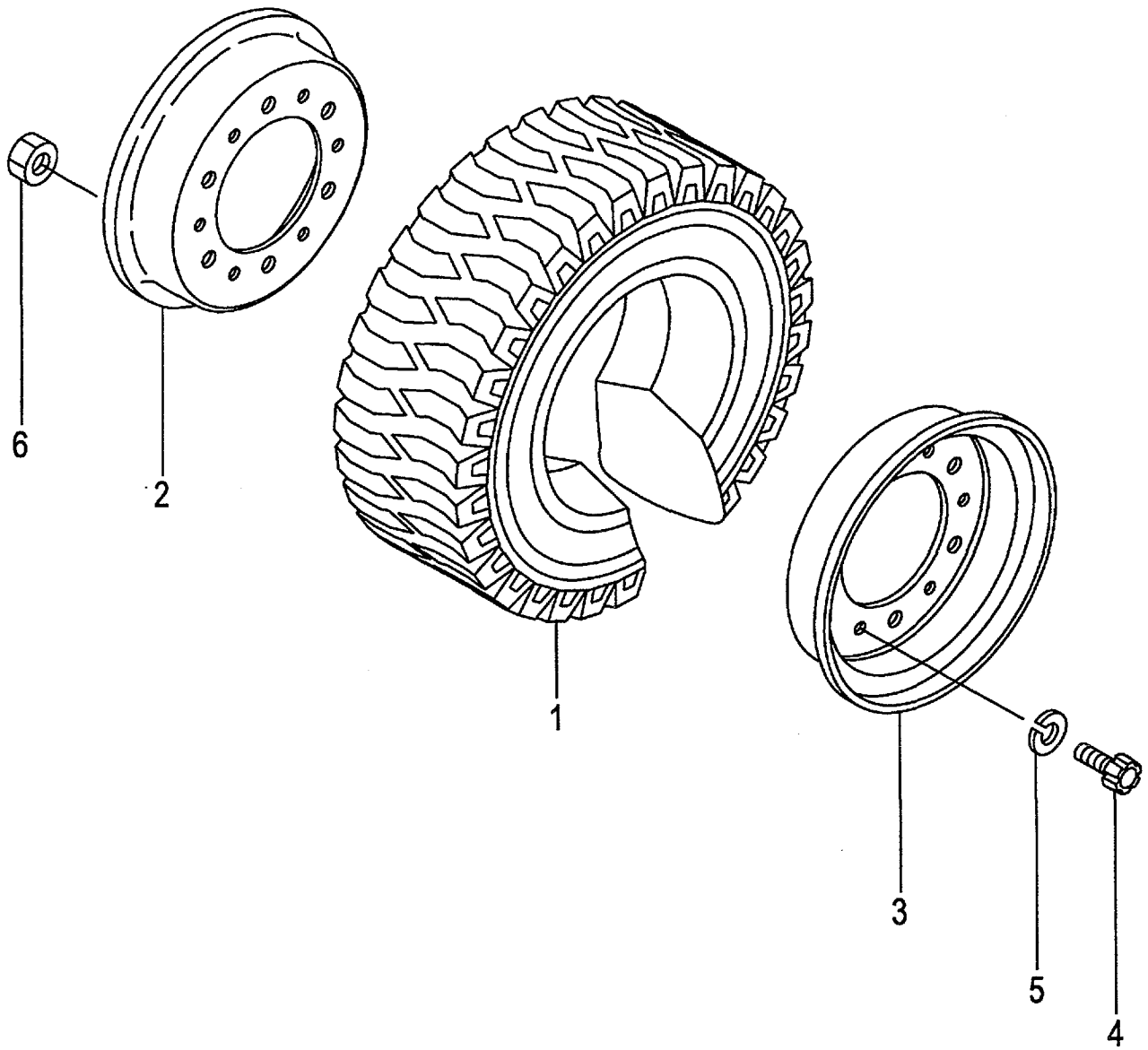

FIG.96
(F5H24470)

A:FG20C6H FG20T6H FG25C6H FG25T6H C:FD20C6H FD20T6H FD25C6H FD25T6H
B:FG20W6H FG25W6H D:FD20W6H FD25W6H

Item No	Part No.	Mark	Description		Req'd	Remarks : Serial No.
A1	52676-80601		WHEEL-ASSY,FRONT	ﾌﾛﾝﾄﾎｲｰﾙｱｯｾﾝ	2	[TUJF] INC.1-6
-	52676-80601		WHEEL-ASSY,FRONT	ﾌﾛﾝﾄﾎｲｰﾙｱｯｾﾝ	2	[TUJF] INC.1-6
-	522A3-80401		WHEEL-ASSY,FRONT	ﾌﾛﾝﾄﾎｲｰﾙｱｯｾﾝ	2	[TUJF] INC.1-6
-	522A3-80401		WHEEL-ASSY,FRONT	ﾌﾛﾝﾄﾎｲｰﾙｱｯｾﾝ	2	A,C [TUJF/EX] INC.1-6
-	522A6-80221		WHEEL-ASSY,FRONT	ﾌﾛﾝﾄﾎｲｰﾙｱｯｾﾝ	2	[TUSF] INC.1-6
-	522A6-80201		WHEEL-ASSY,FRONT	ﾌﾛﾝﾄﾎｲｰﾙｱｯｾﾝ	2	[TUWF] INC.1-6
-	522A6-80211		WHEEL-ASSY,FRONT	ﾌﾛﾝﾄﾎｲｰﾙｱｯｾﾝ	2	[TUGF] INC.1-6
1	06806-70012		TIRE,UNIQUE,700-12	ﾀｲﾔ	2	[TUJF]
-	06806-70012		TIRE,UNIQUE,700-12	ﾀｲﾔ	2	[TUJF]
-	06807-70012		TIRE,UNIQUE,700-12	ﾀｲﾔ	2	[TUJF]
-	06807-70012		TIRE,UNIQUE,700-12	ﾀｲﾔ	2	A,C [TUJF/EX]
-	06851-70012		TIRE,SOFTONE,700-12	ﾀｲﾔ	2	[TUSF]
-	06841-70012		TIRE,WHITE,700-12	ﾀｲﾔ	2	[TUWF]
-	06843-70012		TIRE,GREEN,700-12	ﾀｲﾔ	2	[TUGF]
A2	23454-40501		RIM-ASSY,500S-12	ﾘﾑｱｯｾﾝ	2	[TUJF][TUSF][TUWF][TUGF] INC.2-6
2	NO PART NO.	#	RIM,INSIDE	ﾘﾑ	2	[TUJF][TUSF][TUWF][TUGF]
3	NO PART NO.	#	RIM,OUTSIDE	ﾘﾑ	2	[TUJF][TUSF][TUWF][TUGF]
4	514A3-82601		BOLT	ﾎﾞﾙﾄ	12	[TUJF][TUSF][TUWF][TUGF]
5	02011-00016		WASHER	ﾜｯｼｬ	12	[TUJF][TUSF][TUWF][TUGF]
6	01400-10016		NUT	ﾅｯﾄ	12	[TUJF][TUSF][TUWF][TUGF]

FIG.97 FRONT WHEEL [TUJF/DR F]

(F5H24480) フロントホイール

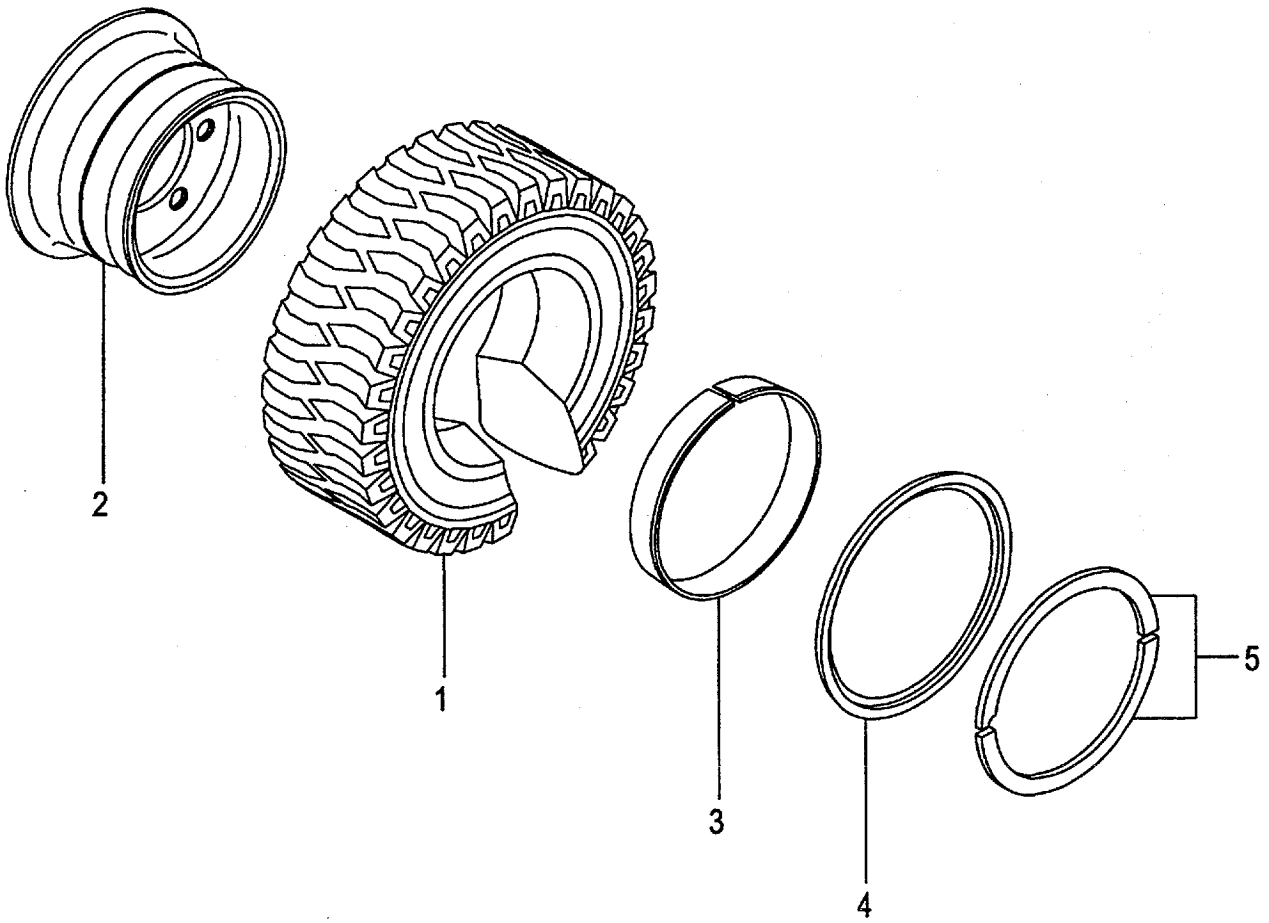

FIG.97
(F5H24480)

A:FG20C6H FG20T6H FG25C6H FG25T6H FG20W6H FG25W6H
B:FD20C6H FD20T6H FD25C6H FD25T6H FD20W6H FD25W6H

Item No	Part No.	Mark	Description		Req'd	Remarks : Serial No.
A1	53666-80401		WHEEL-ASSY,FRONT	ﾌﾛﾝﾄﾎｲｰﾙｱｯｾﾝ	2	[TUJF/DR F] INC.1-5
1	06806-70012		TIRE,UNIQUE,700-12	ﾀｲﾔ	2	[TUJF/DR F]
A2	53666-81801		RIM-ASSY,500S-12	ﾘﾑｱｯｾﾝ	2	[TUJF/DR F] INC.2-5
2	NO PART NO.	#	RIM	ﾘﾑ	2	[TUJF/DR F]
3	53656-82041		BAND	ﾊﾞﾝﾄﾞ	2	[TUJF/DR F]
4	53656-82051		FLANGE,SIDE	ﾌﾗﾝｼﾞ	2	[TUJF/DR F]
5	53656-82061		RING,LOCK	ﾘﾝｸﾞ	2	[TUJF/DR F]

FIG.98 FRONT WHEEL [TRAF]

(F5H24490) フロントホイール

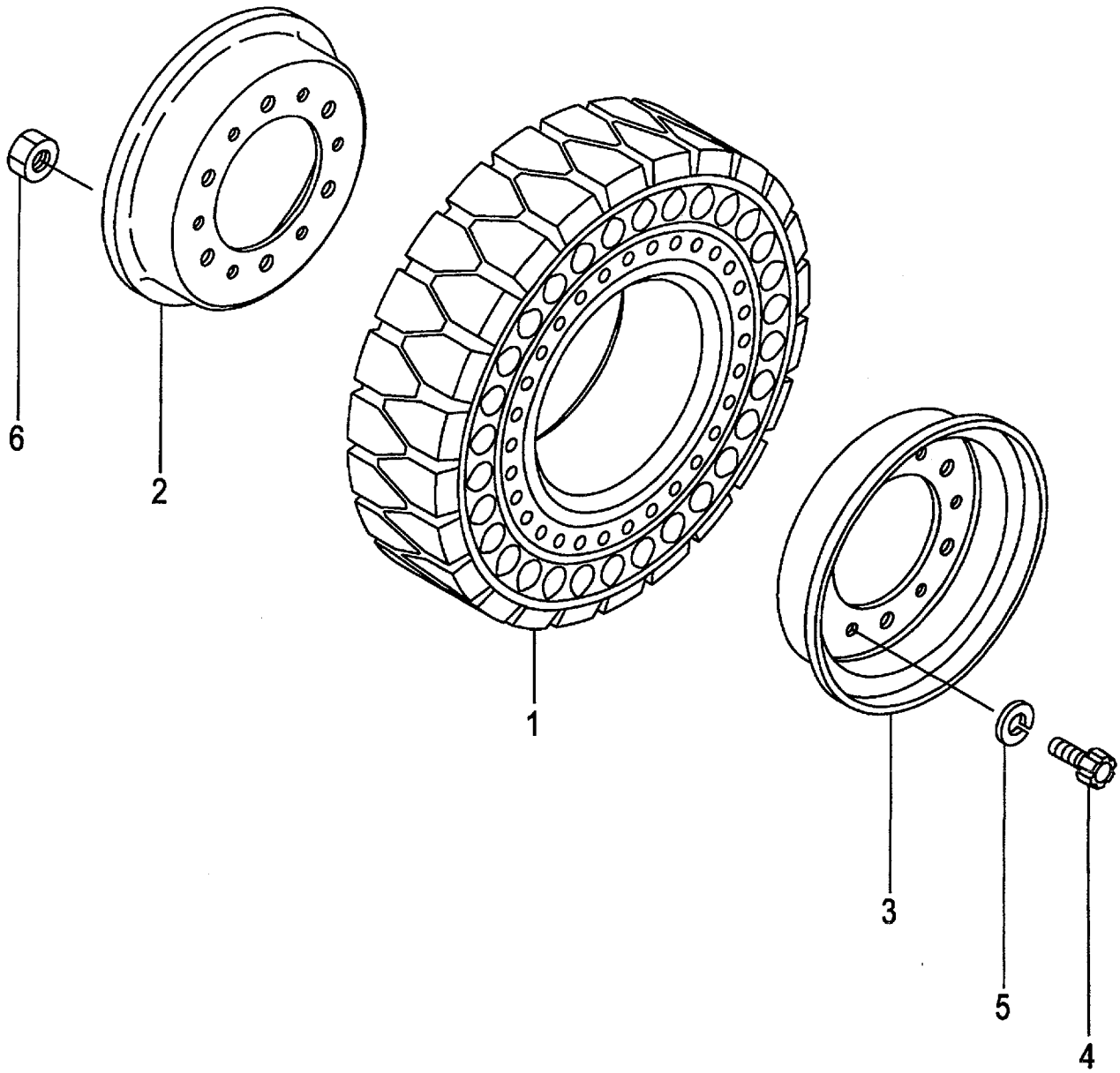

FIG.98
(F5H24490)

A:FG20C6H FG20T6H FG25C6H FG25T6H FG20W6H FG25W6H
B:FD20C6H FD20T6H FD25C6H FD25T6H FD20W6H FD25W6H

Item No	Part No.	Mark	Description		Req'd	Remarks : Serial No.
A1	534A6-80171		WHEEL-ASSY,FRONT	フロントホイールアッセン	2	[TRAF] INC.1-6
1	534A6-85011		TIRE,AIR-BOSS,700-12	タイヤ	2	[TRAF]
A2	23454-40501		RIM-ASSY,500S-12	リムアッセン	2	[TRAF] INC.2-6
2	NO PART NO.	#	RIM,INSIDE	リム	2	[TRAF]
3	NO PART NO.	#	RIM,OUTSIDE	リム	2	[TRAF]
4	514A3-82601		BOLT	ボルト	12	[TRAF]
5	02011-00016		WASHER	ワッシャ	12	[TRAF]
6	01400-10016		NUT	ナット	12	[TRAF]

FIG.99 FRONT WHEEL [TUJSF]

(F5H244A0) フロントホイール

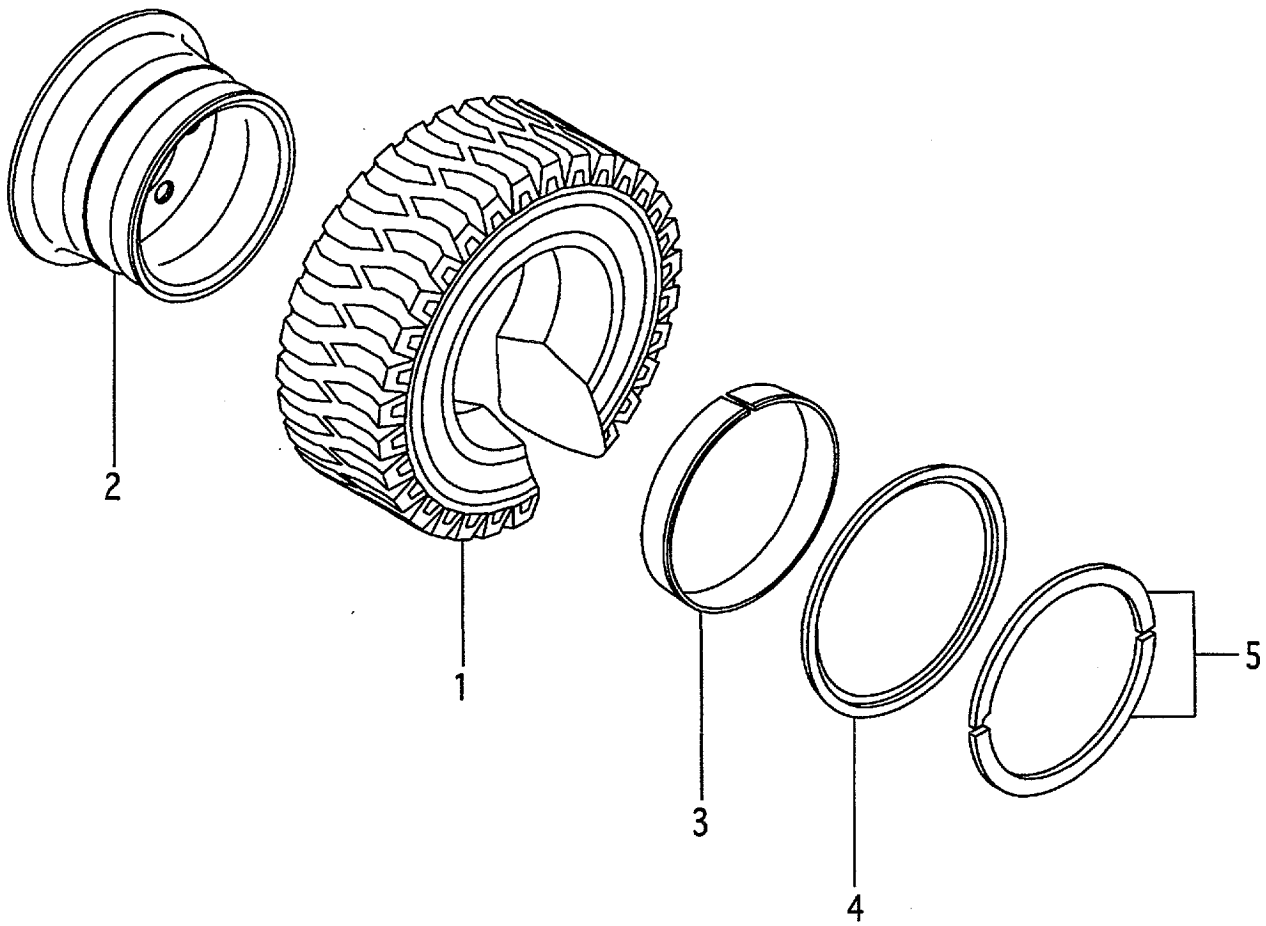

FIG.99
(F5H244A0)

A:FG20C6H FG20T6H FG25C6H FG25T6H FG20W6H FG25W6H
B:FD20C6H FD20T6H FD25C6H FD25T6H FD20W6H FD25W6H

Item No	Part No.	Mark	Description		Req'd	Remarks : Serial No.
A1	62156-52501		WHEEL-ASSY,FRONT	ﾌﾛﾝﾄﾎｲｰﾙｱｯｾﾝ	2	[TUJSF] INC.1-5
1	06804-70012		TIRE,UNIQUE,700-12	ﾀｲﾔ	2	[TUJSF]
A2	22854-40201		RIM-ASSY,500S-12	ﾘﾑｱｯｾﾝ	2	[TUJSF] INC.2-5
2	NO PART NO.	#	RIM	ﾘﾑ	2	[TUJSF]
3	53656-82041		BAND	ﾊﾞﾝﾄﾞ	2	[TUJSF]
4	53656-82051		FLANGE,SIDE	ﾌﾗﾝｼﾞ	2	[TUJSF]
5	53656-82061		RING,LOCK	ﾘﾝｸﾞ	2	[TUJSF]

FIG.100 FRONT WHEEL [TJ W][TJSW][T W][TS W]

(F5H244B0) フロントホイール

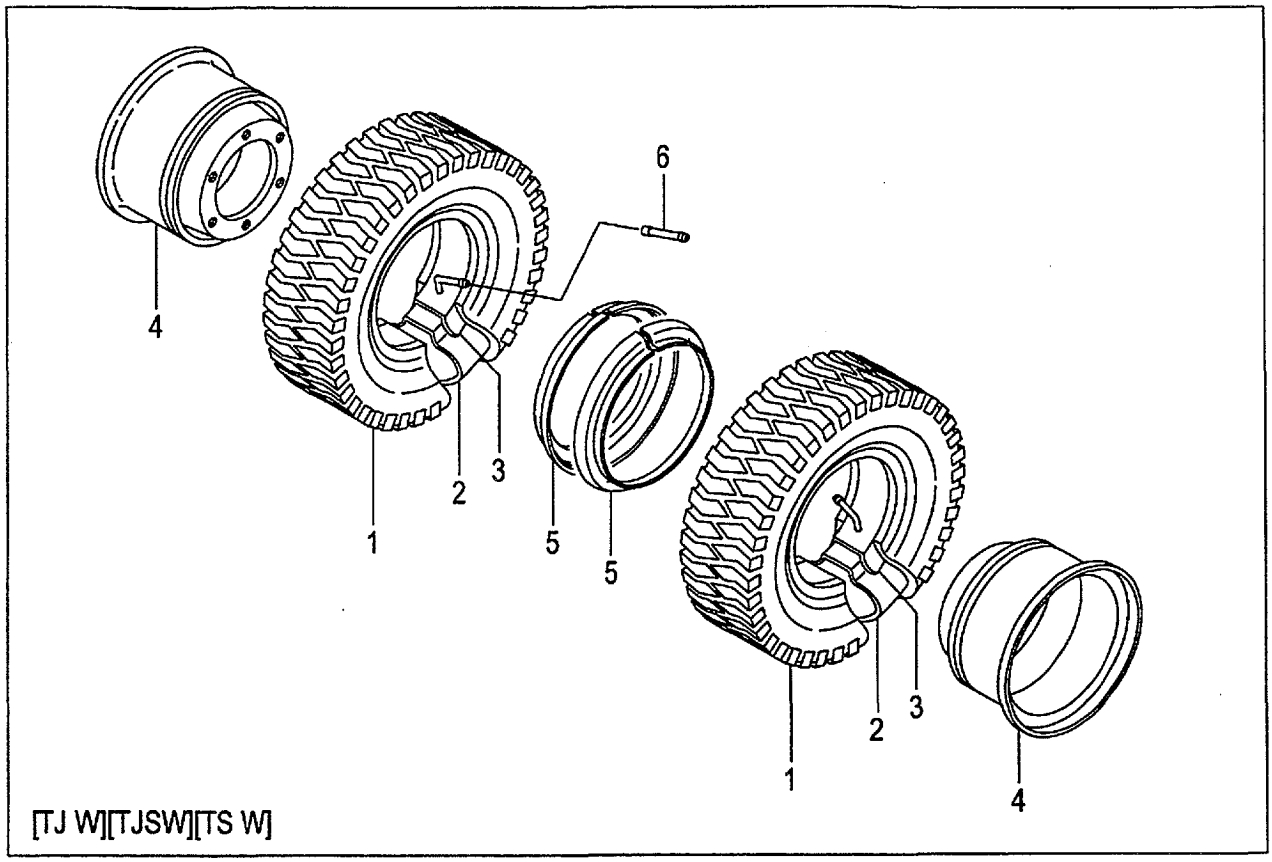

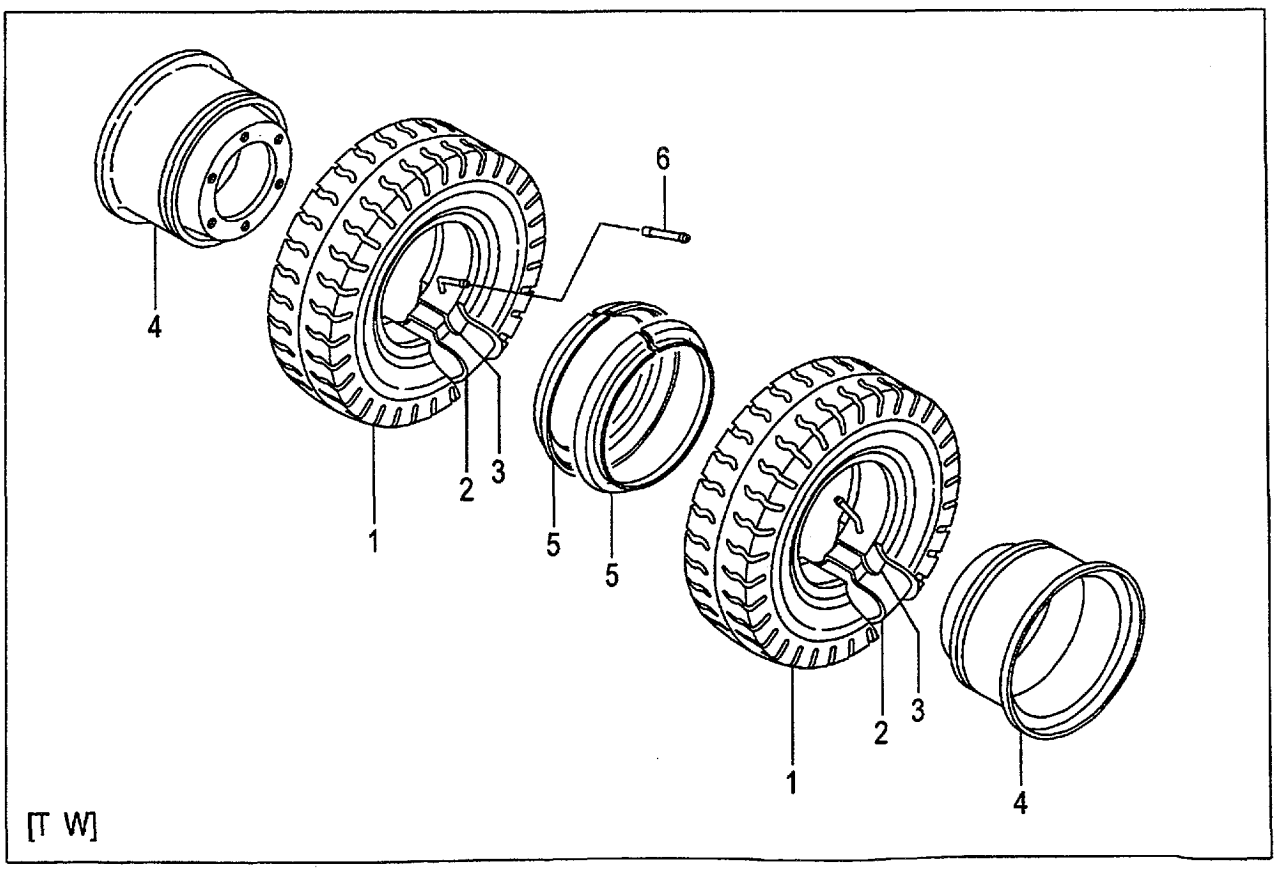

A:FG20C6H FG20T6H FG25C6H FG25T6H FG20W6H FG25W6H
B:FD20C6H FD20T6H FD25C6H FD25T6H FD20W6H FD25W6H

Item No	Part No.	Mark	Description		Req'd	Remarks : Serial No.
A1	52676-80402		WHEEL-ASSY,FRONT	ﾌﾛﾝﾄﾎｲｰﾙｱｯｾﾝ	4	[TJ W] INC.1-5
-	52676-80202		WHEEL-ASSY,FRONT	ﾌﾛﾝﾄﾎｲｰﾙｱｯｾﾝ	4	[TJSW] INC.1-5
-	53457-40003		WHEEL-ASSY,FRONT	ﾌﾛﾝﾄﾎｲｰﾙｱｯｾﾝ	4	[T W] INC.1-5
-	52676-80302		WHEEL-ASSY,FRONT	ﾌﾛﾝﾄﾎｲｰﾙｱｯｾﾝ	4	[TS W] INC.1-5
1	06006-55015		TIRE,550-15-8	ﾀｲﾔ	4	[TJ W]
-	06005-55015		TIRE,550-15-8	ﾀｲﾔ	4	[TJSW]
-	06001-55015		TIRE,550-15-8	ﾀｲﾔ	4	[T W]
-	06007-55015		TIRE,550-15-8	ﾀｲﾔ	4	[TS W]
2	06711-55015		TUBE,550-15-8T	ﾁｭｰﾌﾞ	4	[TJ W][TJSW][T W][TS W]
3	06701-55015		FLAP,550-15-8F	ﾌﾗｯﾌﾟ	4	[TJ W][TJSW][T W][TS W]
A2	53657-42053		RIM-ASSY,450E-15	ﾘﾑｱｯｾﾝ	4	[TJ W][TJSW][T W][TS W] INC.4,5
4	NO PART NO.	#	RIM & DISK	ﾘﾑ & ﾃﾞｨｽｸ	4	[TJ W][TJSW][T W][TS W]
5	53457-42151		RING,SIDE	ﾘﾝｸﾞ	4	[TJ W][TJSW][T W][TS W]
6	06731-00120		TUBE,EXTENSION	ﾁｭｰﾌﾞ	2	[TJ W][TJSW][T W][TS W]

FIG.101 FRONT WHEEL [TUJW][TUSW][TUWW][TUGW]

(F5H244C0) フロントホイール

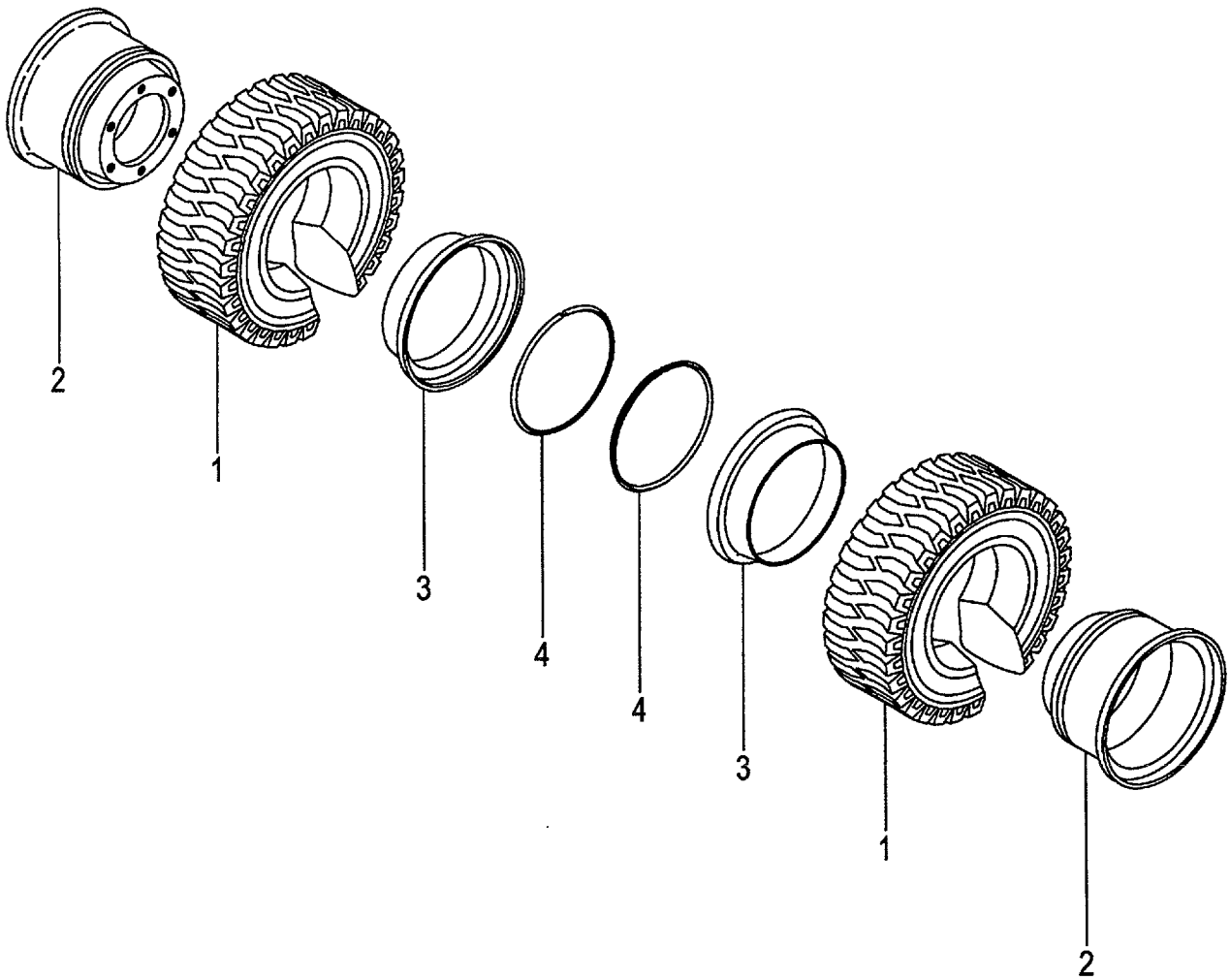

A:FG20C6H FG20T6H FG25C6H FG25T6H FG20W6H FG25W6H
B:FD20C6H FD20T6H FD25C6H FD25T6H FD20W6H FD25W6H

Item No	Part No.	Mark	Description		Req'd	Remarks : Serial No.
A1	52676-80802		WHEEL-ASSY,FRONT	ﾌﾛﾝﾄﾎｲｰﾙｱｯｾﾝ	4	[TUJW] INC.1-4
-	522A6-80321		WHEEL-ASSY,FRONT	ﾌﾛﾝﾄﾎｲｰﾙｱｯｾﾝ	4	[TUSW] INC.1-4
-	522A6-80301		WHEEL-ASSY,FRONT	ﾌﾛﾝﾄﾎｲｰﾙｱｯｾﾝ	4	[TUWW] INC.1-4
-	522A6-80311		WHEEL-ASSY,FRONT	ﾌﾛﾝﾄﾎｲｰﾙｱｯｾﾝ	4	[TUGW] INC.1-4
1	06806-55015		TIRE,UNIQUE,550-15	ﾀｲﾔ	4	[TUJW]
-	06851-55015		TIRE,SOFTONE,550-15	ﾀｲﾔ	4	[TUSW]
-	06841-55015		TIRE,WHITE,550-15	ﾀｲﾔ	4	[TUWW]
-	06843-55015		TIRE,GREEN,550-15	ﾀｲﾔ	4	[TUGW]
A2	53656-82001		RIM-ASSY,450E-15	ﾘﾑｱｯｾﾝ	4	[TUJW][TUSW][TUWW][TUGW] INC.2-4
2	NO PART NO.	#	RIM	ﾘﾑ	4	[TUJW][TUSW][TUWW][TUGW]
3	53456-82052		RING,SIDE	ﾘﾝｸﾞ	4	[TUJW][TUSW][TUWW][TUGW]
4	53456-82062		RING,LOCK	ﾘﾝｸﾞ	4	[TUJW][TUSW][TUWW][TUGW]

FIG.102 FRONT WHEEL [TJ W70][TJSW70][T W70][TS W70]

(F5H244D0) フロントホイール

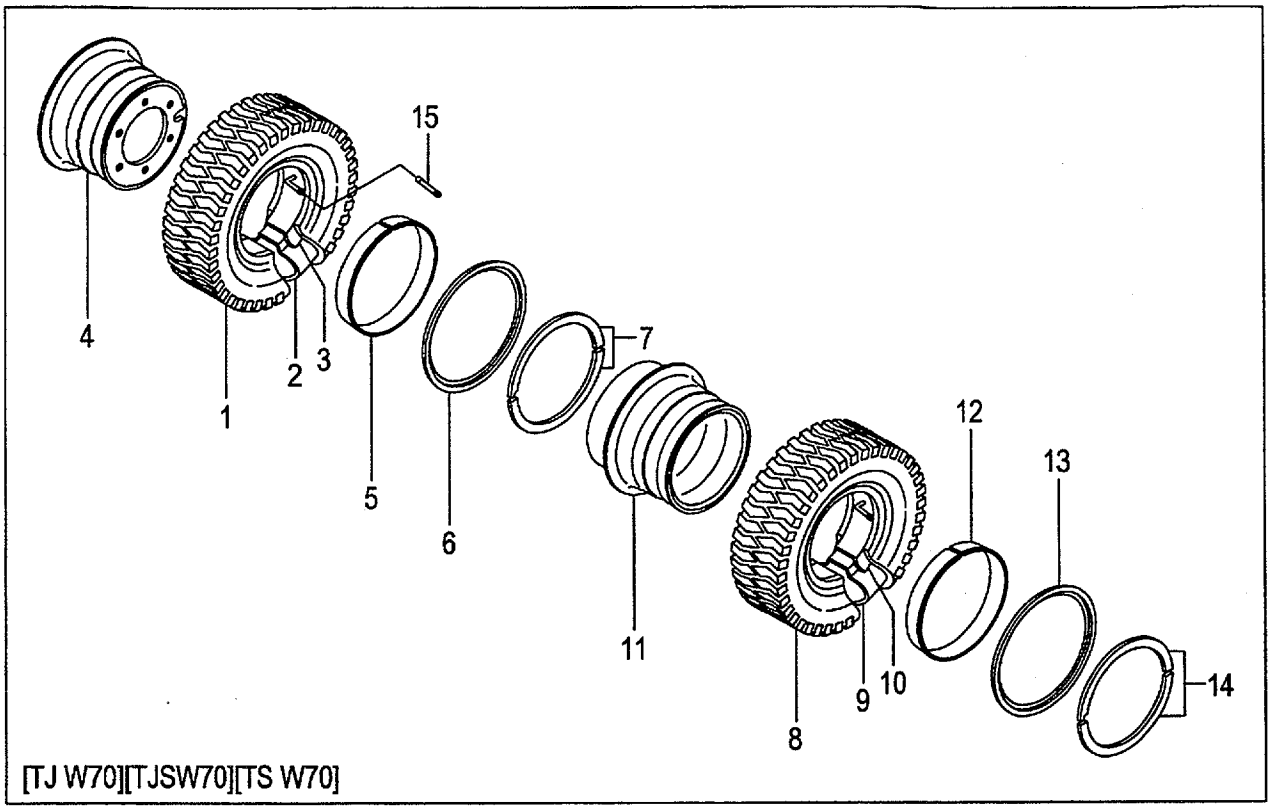

[TJ W70][TJSW70][TS W70]

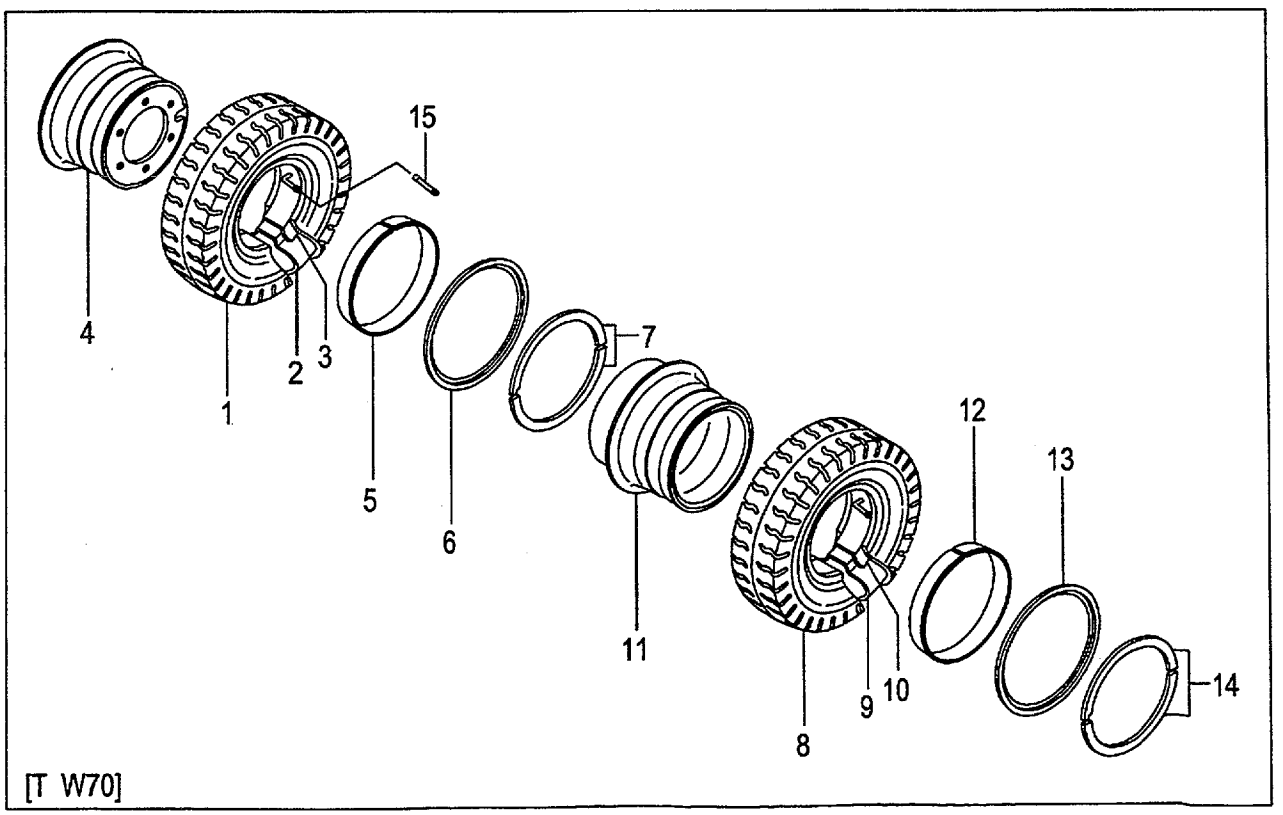

[T W70]

A:FG20C6H FG20T6H FG25C6H FG25T6H FG20W6H FG25W6H
B:FD20C6H FD20T6H FD25C6H FD25T6H FD20W6H FD25W6H

Item No	Part No.	Mark	Description		Req'd	Remarks : Serial No.
A1	53656-80601		WHEEL-ASSY,FRONT	ﾌﾛﾝﾄﾎｲｰﾙｱｯｾﾝ	2	[TJ W70] INC.1-7
-	53656-80501		WHEEL-ASSY,FRONT	ﾌﾛﾝﾄﾎｲｰﾙｱｯｾﾝ	2	[TJSW70] INC.1-7
-	53656-80201		WHEEL-ASSY,FRONT	ﾌﾛﾝﾄﾎｲｰﾙｱｯｾﾝ	2	[T W70] INC.1-7
-	53656-80701		WHEEL-ASSY,FRONT	ﾌﾛﾝﾄﾎｲｰﾙｱｯｾﾝ	2	[TS W70] INC.1-7
1	06006-70012		TIRE,700-12-12	ﾀｲﾔ	2	[TJ W70]
-	06005-70012		TIRE,700-12-12	ﾀｲﾔ	2	[TJSW70]
-	06001-70012		TIRE,700-12-12	ﾀｲﾔ	2	[T W70]
-	06007-70012		TIRE,700-12-12	ﾀｲﾔ	2	[TS W70]
2	06711-70012		TUBE,700-12-12T	ﾁｭｰﾌﾞ	2	[TJ W70][TJSW70][T W70] [TS W70]
3	06701-70012		FLAP,700-12-12F	ﾌﾗｯﾌﾟ	2	[TJ W70][TJSW70][T W70] [TS W70]
A2	53656-80901		RIM-ASSY,500S-12TD	ﾘﾑｱｯｾﾝ	2	[TJ W70][TJSW70][T W70] [TS W70] INC.4-7
4	NO PART NO.	#	RIM	ﾘﾑ	2	[TJ W70][TJSW70][T W70] [TS W70]
5	53656-82041		BAND	ﾊﾞﾝﾄﾞ	2	[TJ W70][TJSW70][T W70] [TS W70]
6	53656-82051		FLANGE,SIDE	ﾌﾗﾝｼﾞ	2	[TJ W70][TJSW70][T W70] [TS W70]
7	53656-82061		RING,LOCK	ﾘﾝｸﾞ	2	[TJ W70][TJSW70][T W70] [TS W70]
A3	53656-80611		WHEEL-ASSY,FRONT	ﾌﾛﾝﾄﾎｲｰﾙｱｯｾﾝ	2	[TJ W70] INC.8-14
-	53656-80511		WHEEL-ASSY,FRONT	ﾌﾛﾝﾄﾎｲｰﾙｱｯｾﾝ	2	[TJSW70] INC.8-14
-	53656-80211		WHEEL-ASSY,FRONT	ﾌﾛﾝﾄﾎｲｰﾙｱｯｾﾝ	2	[T W70] INC.8-14
-	53656-80711		WHEEL-ASSY,FRONT	ﾌﾛﾝﾄﾎｲｰﾙｱｯｾﾝ	2	[TS W70] INC.8-14
8	06006-70012		TIRE,700-12-12	ﾀｲﾔ	2	[TJ W70]
-	06005-70012		TIRE,700-12-12	ﾀｲﾔ	2	[TJSW70]
-	06001-70012		TIRE,700-12-12	ﾀｲﾔ	2	[T W70]
-	06007-70012		TIRE,700-12-12	ﾀｲﾔ	2	[TS W70]
9	06711-70012		TUBE,700-12-12T	ﾁｭｰﾌﾞ	2	[TJ W70][TJSW70][T W70] [TS W70]
10	06701-70012		FLAP,700-12-12F	ﾌﾗｯﾌﾟ	2	[TJ W70][TJSW70][T W70] [TS W70]
A4	53656-80911		RIM-ASSY,500S-12TD	ﾘﾑｱｯｾﾝ	2	[TJ W70][TJSW70][T W70] [TS W70] INC.11-14
11	NO PART NO.	#	RIM	ﾘﾑ	2	[TJ W70][TJSW70][T W70] [TS W70]
12	53656-82041		BAND	ﾊﾞﾝﾄﾞ	2	[TJ W70][TJSW70][T W70] [TS W70]
13	53656-82051		FLANGE,SIDE	ﾌﾗﾝｼﾞ	2	[TJ W70][TJSW70][T W70] [TS W70]
14	53656-82061		RING,LOCK	ﾘﾝｸﾞ	2	[TJ W70][TJSW70][T W70] [TS W70]
15	06731-00120		TUBE,EXTENSION	ﾁｭｰﾌﾞ	2	[TJ W70][TJSW70][T W70] [TS W70]

FIG.103 FRONT WHEEL [TUJW70][TUSW70][TUWW70][TUGW70]

(F5H244E0) フロントホイール

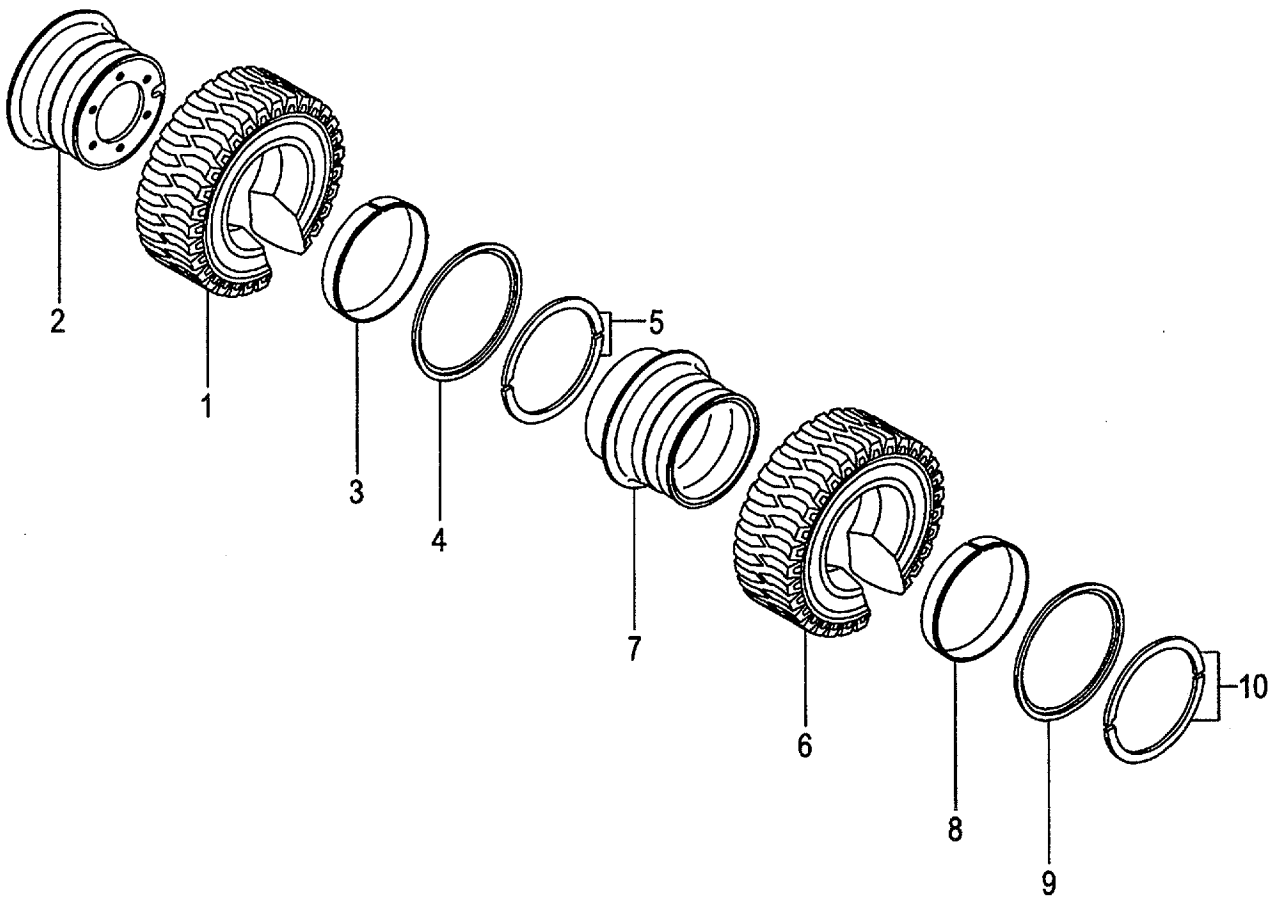

A:FG20C6H FG20T6H FG25C6H FG25T6H FG20W6H FG25W6H
B:FD20C6H FD20T6H FD25C6H FD25T6H FD20W6H FD25W6H

Item No	Part No.	Mark	Description		Req'd	Remarks : Serial No.
A1	53656-80401		WHEEL-ASSY,FRONT	ﾌﾛﾝﾄﾎｲｰﾙｱｯｾﾝ	2	[TUJW70] INC.1-5
-	522A6-80441		WHEEL-ASSY,FRONT	ﾌﾛﾝﾄﾎｲｰﾙｱｯｾﾝ	2	[TUSW70] INC.1-5
-	522A6-80401		WHEEL-ASSY,FRONT	ﾌﾛﾝﾄﾎｲｰﾙｱｯｾﾝ	2	[TUWW70] INC.1-5
-	522A6-80421		WHEEL-ASSY,FRONT	ﾌﾛﾝﾄﾎｲｰﾙｱｯｾﾝ	2	[TUGW70] INC.1-5
1	06806-70012		TIRE,UNIQUE,700-12	ﾀｲﾔ	2	[TUJW70]
-	06851-70012		TIRE,SOFTONE,700-12	ﾀｲﾔ	2	[TUSW70]
-	06841-70012		TIRE,WHITE,700-12	ﾀｲﾔ	2	[TUWW70]
-	06843-70012		TIRE,GREEN,700-12	ﾀｲﾔ	2	[TUGW70]
A2	53656-80901		RIM-ASSY,500S-12TD	ﾘﾑｱｯｾﾝ	2	[TUJW70][TUSW70][TUWW70] [TUGW70] INC.2-5
2	NO PART NO.	#	RIM	ﾘﾑ	2	[TUJW70][TUSW70][TUWW70] [TUGW70]
3	53656-82041		BAND	ﾊﾞﾝﾄﾞ	2	[TUJW70][TUSW70][TUWW70] [TUGW70]
4	53656-82051		FLANGE,SIDE	ﾌﾗﾝｼﾞ	2	[TUJW70][TUSW70][TUWW70] [TUGW70]
5	53656-82061		RING,LOCK	ﾘﾝｸﾞ	2	[TUJW70][TUSW70][TUWW70] [TUGW70]
A3	53656-80411		WHEEL-ASSY,FRONT	ﾌﾛﾝﾄﾎｲｰﾙｱｯｾﾝ	2	[TUJW70] INC.6-10
-	522A6-80451		WHEEL-ASSY,FRONT	ﾌﾛﾝﾄﾎｲｰﾙｱｯｾﾝ	2	[TUSW70] INC.6-10
-	522A6-80411		WHEEL-ASSY,FRONT	ﾌﾛﾝﾄﾎｲｰﾙｱｯｾﾝ	2	[TUWW70] INC.6-10
-	522A6-80431		WHEEL-ASSY,FRONT	ﾌﾛﾝﾄﾎｲｰﾙｱｯｾﾝ	2	[TUGW70] INC.6-10
6	06806-70012		TIRE,UNIQUE,700-12	ﾀｲﾔ	2	[TUJW70]
-	06851-70012		TIRE,SOFTONE,700-12	ﾀｲﾔ	2	[TUSW70]
-	06841-70012		TIRE,WHITE,700-12	ﾀｲﾔ	2	[TUWW70]
-	06843-70012		TIRE,GREEN,700-12	ﾀｲﾔ	2	[TUGW70]
A4	53656-80911		RIM-ASSY,500S-12TD	ﾘﾑｱｯｾﾝ	2	[TUJW70][TUSW70][TUWW70] [TUGW70] INC.7-10
7	NO PART NO.	#	RIM	ﾘﾑ	2	[TUJW70][TUSW70][TUWW70] [TUGW70]
8	53656-82041		BAND	ﾊﾞﾝﾄﾞ	2	[TUJW70][TUSW70][TUWW70] [TUGW70]
9	53656-82051		FLANGE,SIDE	ﾌﾗﾝｼﾞ	2	[TUJW70][TUSW70][TUWW70] [TUGW70]
10	53656-82061		RING,LOCK	ﾘﾝｸﾞ	2	[TUJW70][TUSW70][TUWW70] [TUGW70]

FIG.104 REAR WHEEL
(F5H244F0) リヤーホイール

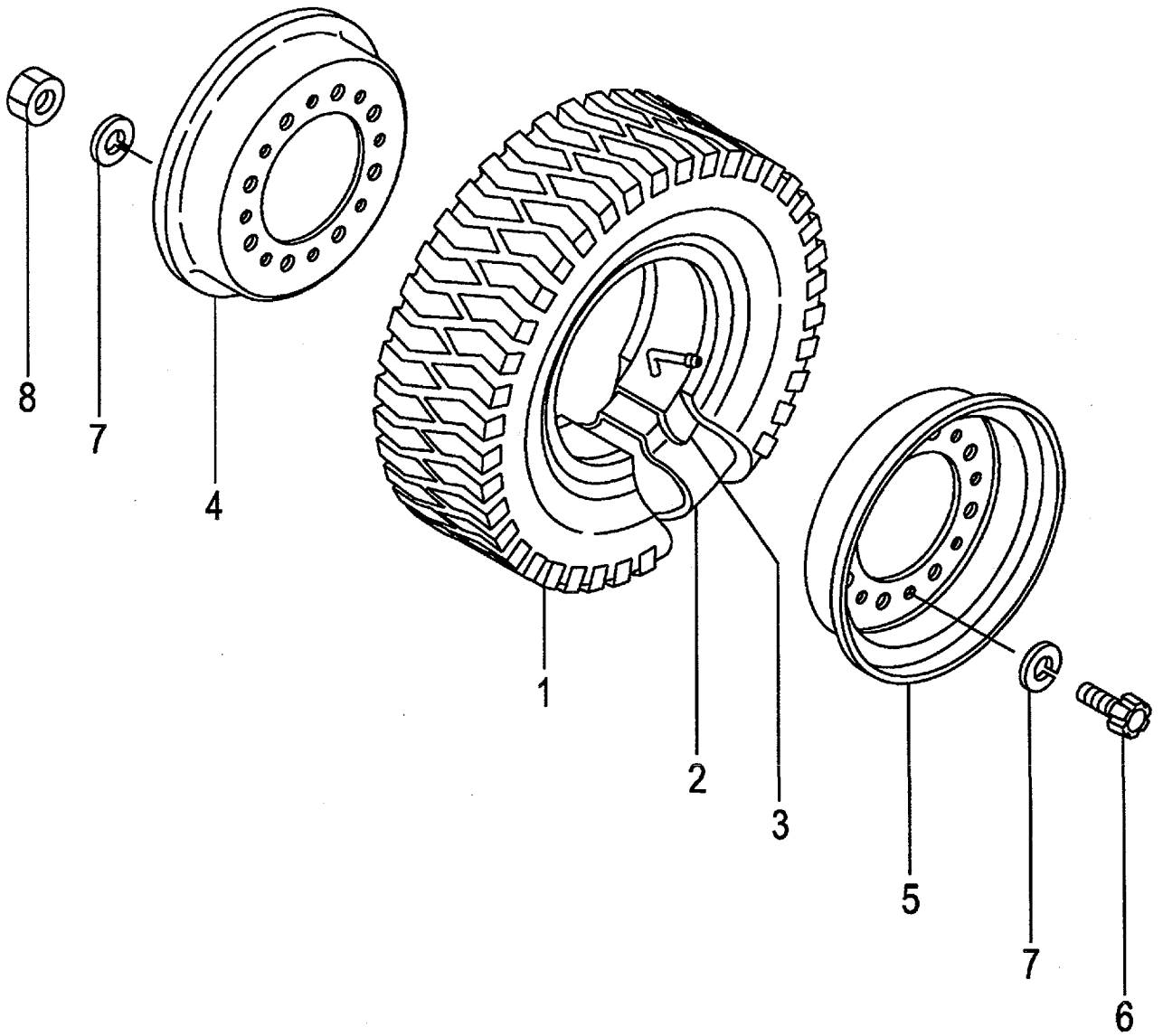

A:FG20C6H FG20T6H FG25C6H FG25T6H FG20W6H FG25W6H
B:FD20C6H FD20T6H FD25C6H FD25T6H FD20W6H FD25W6H

Item No	Part No.	Mark	Description		Req'd	Remarks : Serial No.
A1	53656-81501		WHEEL-ASSY,REAR	ﾘｱﾎｲｰﾙｱｯｾﾝ	2	INC.1-8
1	06006-60009		TIRE,600-9-10	ﾀｲﾔ	2	
2	06712-60009		TUBE,600-9-10T	ﾁｭｰﾌﾞ	2	
3	06702-60009		FLAP,600-9-10F	ﾌﾗｯﾌﾟ	2	
A2	23654-40501		RIM-ASSY,400E-9	ﾘﾑｱｯｾﾝ	2	INC.4-8
4	NO PART NO.	#	RIM,INSIDE	ﾘﾑ	2	
5	NO PART NO.	#	RIM,OUTSIDE	ﾘﾑ	2	
6	534F3-82001		BOLT	ﾎﾞﾙﾄ	16	
7	02011-00012		WASHER	ﾜｯｼｬ	32	
8	01400-00012		NUT	ﾅｯﾄ	16	

FIG.105 REAR WHEEL [DR R]

(F5H244G0) リヤーホイール

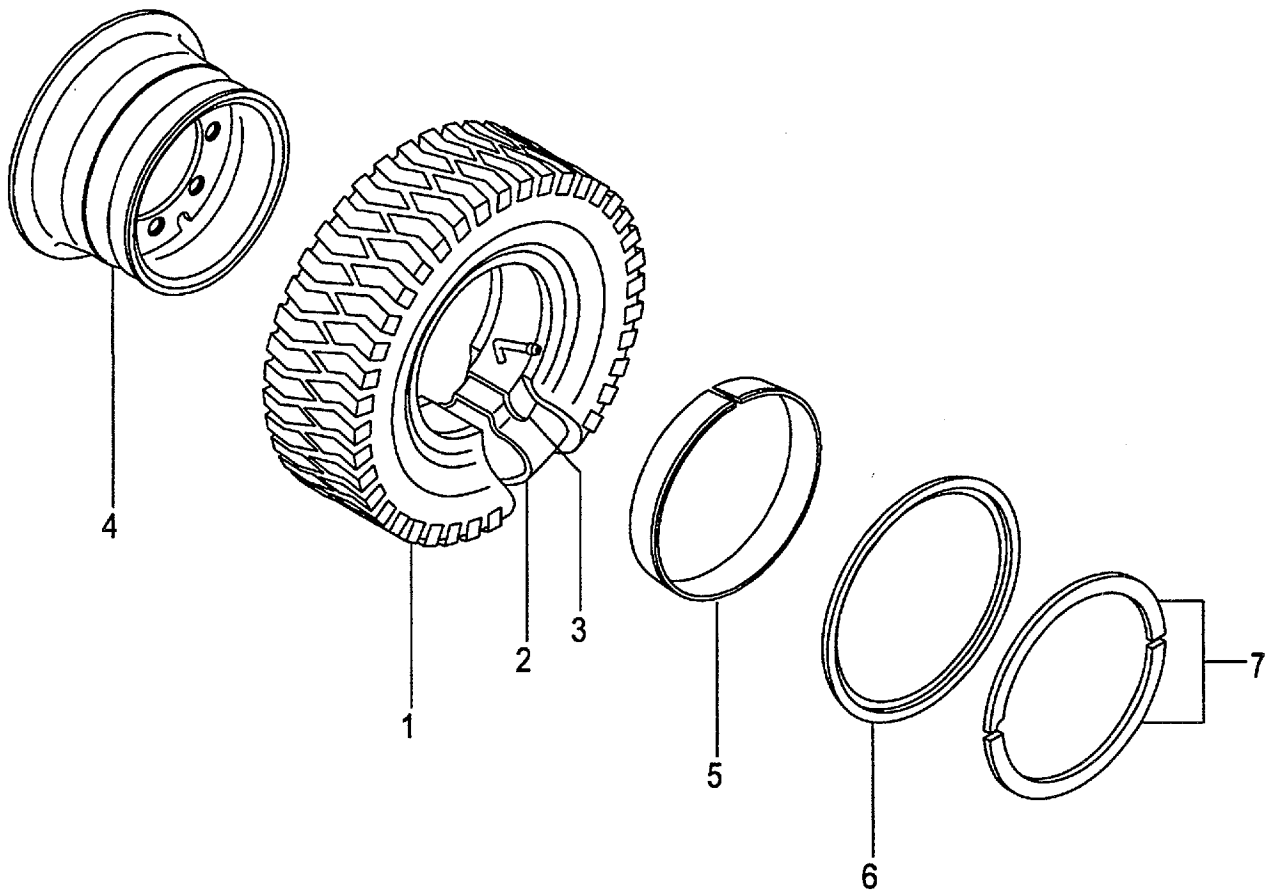

A:FG20C6H FG20T6H FG25C6H FG25T6H FG20W6H FG25W6H
B:FD20C6H FD20T6H FD25C6H FD25T6H FD20W6H FD25W6H

Item No	Part No.	Mark	Description		Req'd	Remarks : Serial No.
A1	53666-81501		WHEEL-ASSY,REAR	ﾘｱﾎｲｰﾙｱｯｾﾝ	2	[DR R] INC.1-7
1	06006-60009		TIRE,600-9-10	ﾀｲﾔ	2	[DR R]
2	06712-60009		TUBE,600-9-10T	ﾁｭｰﾌﾞ	2	[DR R]
3	06702-60009		FLAP,600-9-10F	ﾌﾗｯﾌﾟ	2	[DR R]
A2	53666-81901		RIM-ASSY,400E-9	ﾘﾑｱｯｾﾝ	2	[DR R] INC.4-7
4	NO PART NO.	#	RIM	ﾘﾑ	2	[DR R]
5	53666-82021		BAND	ﾊﾞﾝﾄﾞ	2	[DR R]
6	53666-82031		FLANGE,SIDE	ﾌﾗﾝｼﾞ	2	[DR R]
7	53666-82041		RING,LOCK	ﾘﾝｸﾞ	2	[DR R]

FIG.106 REAR WHEEL [TJ R][TJSR][T R][TS R]

(F5H244H0) リヤーホイール

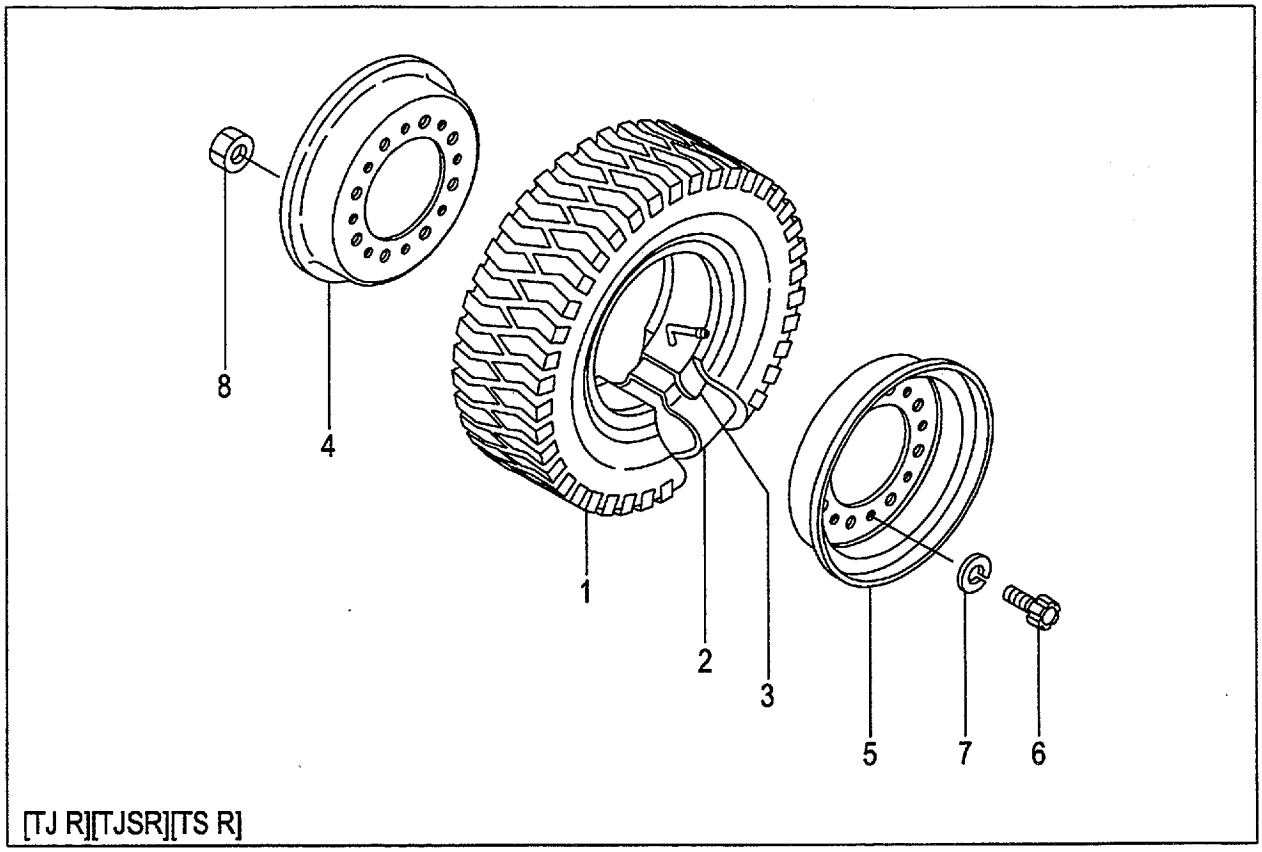

[TJ R][TJSR][TS R]

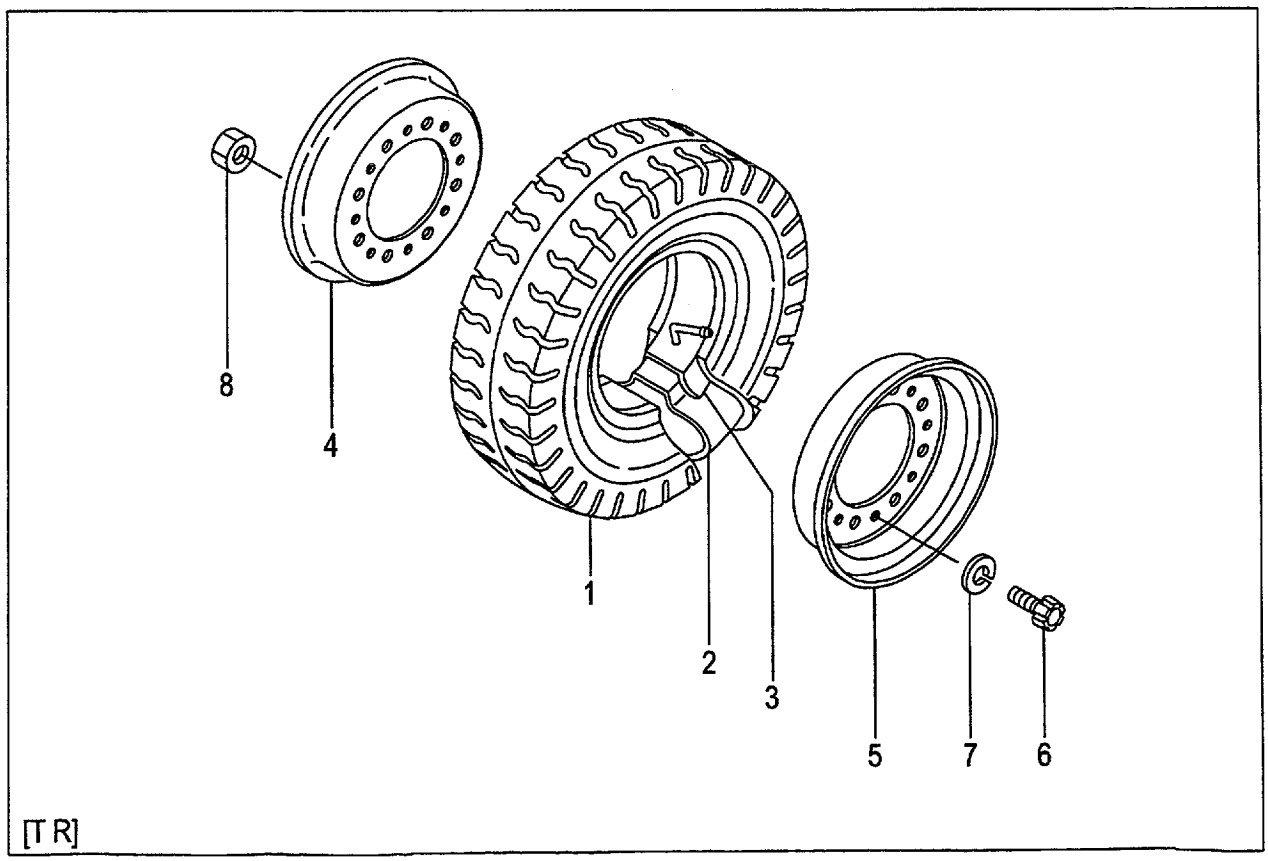

[T R]

A:FG20C6H FG20T6H FG25C6H FG25T6H FG20W6H FG25W6H
B:FD20C6H FD20T6H FD25C6H FD25T6H FD20W6H FD25W6H

Item No	Part No.	Mark	Description		Req'd	Remarks : Serial No.
A1	53656-81501		WHEEL-ASSY,REAR	ﾘｱﾎｲｰﾙｱｯｾﾝ	2	[TJ R] INC.1-8
-	53656-81401		WHEEL-ASSY,REAR	ﾘｱﾎｲｰﾙｱｯｾﾝ	2	[TJSR] INC.1-8
-	23654-40511		WHEEL-ASSY,REAR	ﾘｱﾎｲｰﾙｱｯｾﾝ	2	[T R] INC.1-8
-	53656-81601		WHEEL-ASSY,REAR	ﾘｱﾎｲｰﾙｱｯｾﾝ	2	[TS R] INC.1-8
1	06006-60009		TIRE,600-9-10	ﾀｲﾔ	2	[TJ R]
-	06005-60009		TIRE,600-9-10	ﾀｲﾔ	2	[TJSR]
-	06001-60009		TIRE,600-9-10	ﾀｲﾔ	2	[T R]
-	06007-60009		TIRE,600-9-10	ﾀｲﾔ	2	[TS R]
2	06712-60009		TUBE,600-9-10T	ﾁｭｰﾌﾞ	2	[TJ R][TJSR][T R][TS R]
3	06702-60009		FLAP,600-9-10F	ﾌﾗｯﾌﾟ	2	[TJ R][TJSR][T R][TS R]
A2	23654-40501		RIM-ASSY,400E-9	ﾘﾑｱｯｾﾝ	2	[TJ R][TJSR][T R][TS R] INC.4-8
4	NO PART NO.	#	RIM,INSIDE	ﾘﾑ	2	[TJ R][TJSR][T R][TS R]
5	NO PART NO.	#	RIM,OUTSIDE	ﾘﾑ	2	[TJ R][TJSR][T R][TS R]
6	534F3-82001		BOLT	ﾎﾞﾙﾄ	16	[TJ R][TJSR][T R][TS R]
7	02011-00012		WASHER	ﾜｯｼｬ	32	[TJ R][TJSR][T R][TS R]
8	01400-00012		NUT	ﾅｯﾄ	16	[TJ R][TJSR][T R][TS R]

FIG.107 REAR WHEEL [(TJ R,TJSR,T R,TS R)/DR R]

(F5H244J0) リヤーホイール

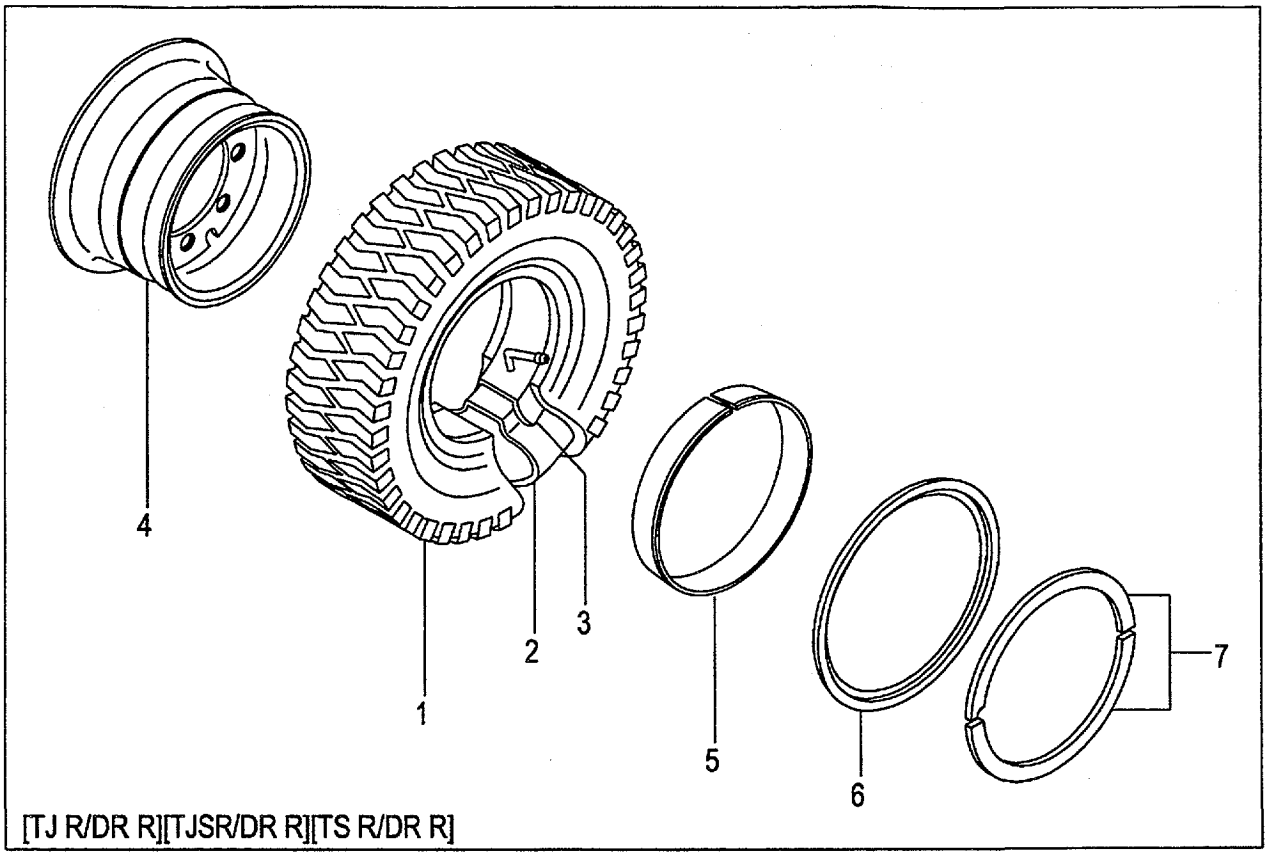

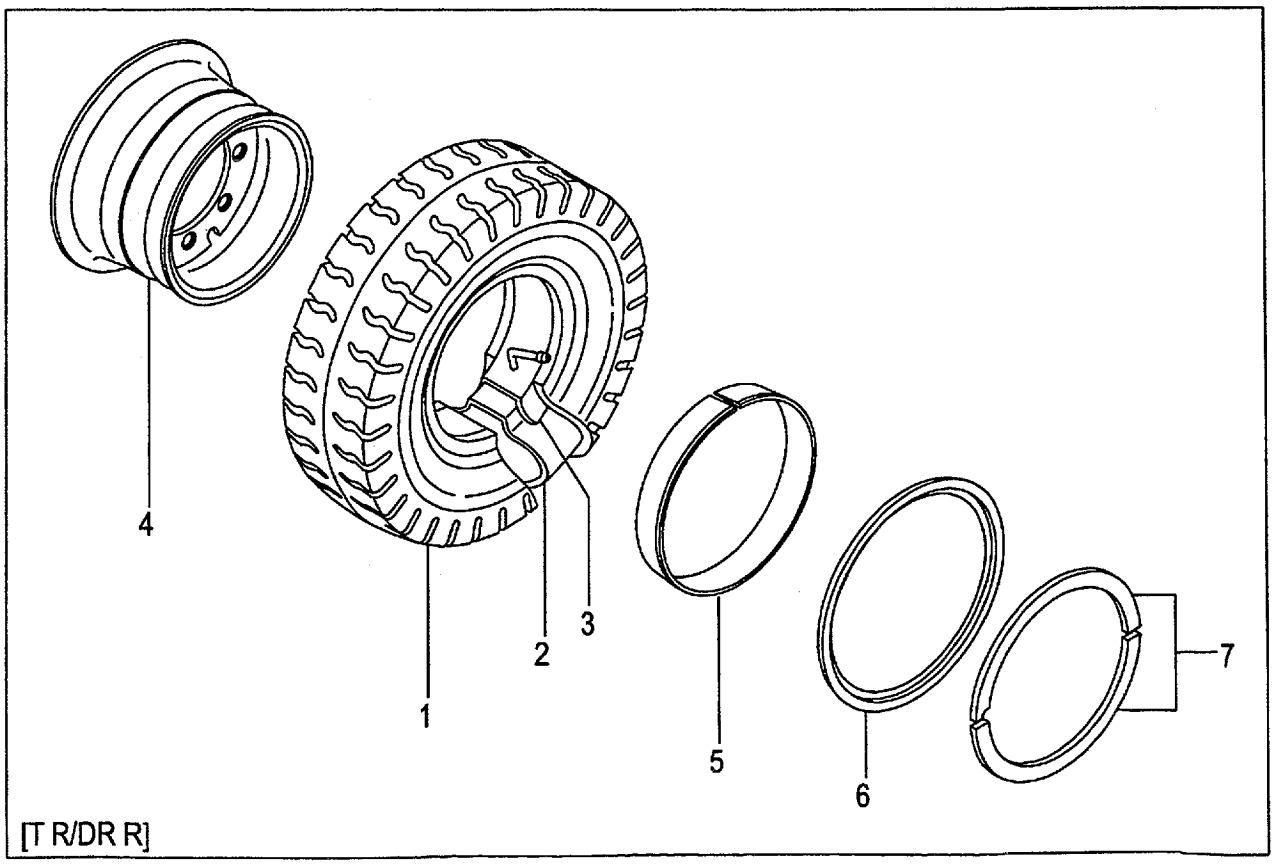

A:FG20C6H FG20T6H FG25C6H FG25T6H FG20W6H FG25W6H
B:FD20C6H FD20T6H FD25C6H FD25T6H FD20W6H FD25W6H

Item No	Part No.	Mark	Description		Req'd	Remarks : Serial No.
A1	53666-81501		WHEEL-ASSY,REAR	ﾘｱﾎｲｰﾙｱｯｾﾝ	2	[TJ R/DR R] INC.1-7
-	53666-81401		WHEEL-ASSY,REAR	ﾘｱﾎｲｰﾙｱｯｾﾝ	2	[TJSR/DR R] INC.1-7
-	53666-80901		WHEEL-ASSY,REAR	ﾘｱﾎｲｰﾙｱｯｾﾝ	2	[T R/DR R] INC.1-7
-	53666-81601		WHEEL-ASSY,REAR	ﾘｱﾎｲｰﾙｱｯｾﾝ	2	[TS R/DR R] INC.1-7
1	06006-60009		TIRE,600-9-10	ﾀｲﾔ	2	[TJ R/DR R]
-	06005-60009		TIRE,600-9-10	ﾀｲﾔ	2	[TJSR/DR R]
-	06001-60009		TIRE,600-9-10	ﾀｲﾔ	2	[T R/DR R]
-	06007-60009		TIRE,600-9-10	ﾀｲﾔ	2	[TS R/DR R]
2	06712-60009		TUBE,600-9-10T	ﾁｭｰﾌﾞ	2	[TJ R/DR R][TJSR/DR R] [T R/DR R][TS R/DR R]
3	06702-60009		FLAP,600-9-10F	ﾌﾗｯﾌﾟ	2	[TJ R/DR R][TJSR/DR R] [T R/DR R][TS R/DR R]
A2	53666-81901		RIM-ASSY,400E-9	ﾘﾑｱｯｾﾝ	2	[TJ R/DR R][TJSR/DR R] INC.4-7
-	53666-81901		RIM-ASSY,400E-9	ﾘﾑｱｯｾﾝ	2	[T R/DR R][TS R/DR R] INC.4-7
4	NO PART NO.	#	RIM	ﾘﾑ	2	[TJ R/DR R][TJSR/DR R] [T R/DR R][TS R/DR R]
5	53666-82021		BAND	ﾊﾞﾝﾄﾞ	2	[TJ R/DR R][TJSR/DR R] [T R/DR R][TS R/DR R]
6	53666-82031		FLANGE,SIDE	ﾌﾗﾝｼﾞ	2	[TJ R/DR R][TJSR/DR R] [T R/DR R][TS R/DR R]
7	53666-82041		RING,LOCK	ﾘﾝｸﾞ	2	[TJ R/DR R][TJSR/DR R] [T R/DR R][TS R/DR R]

FIG.108 REAR WHEEL [TUJR][TUSR][TUWR][TUGR]

(F5H244K0) リヤーホイール

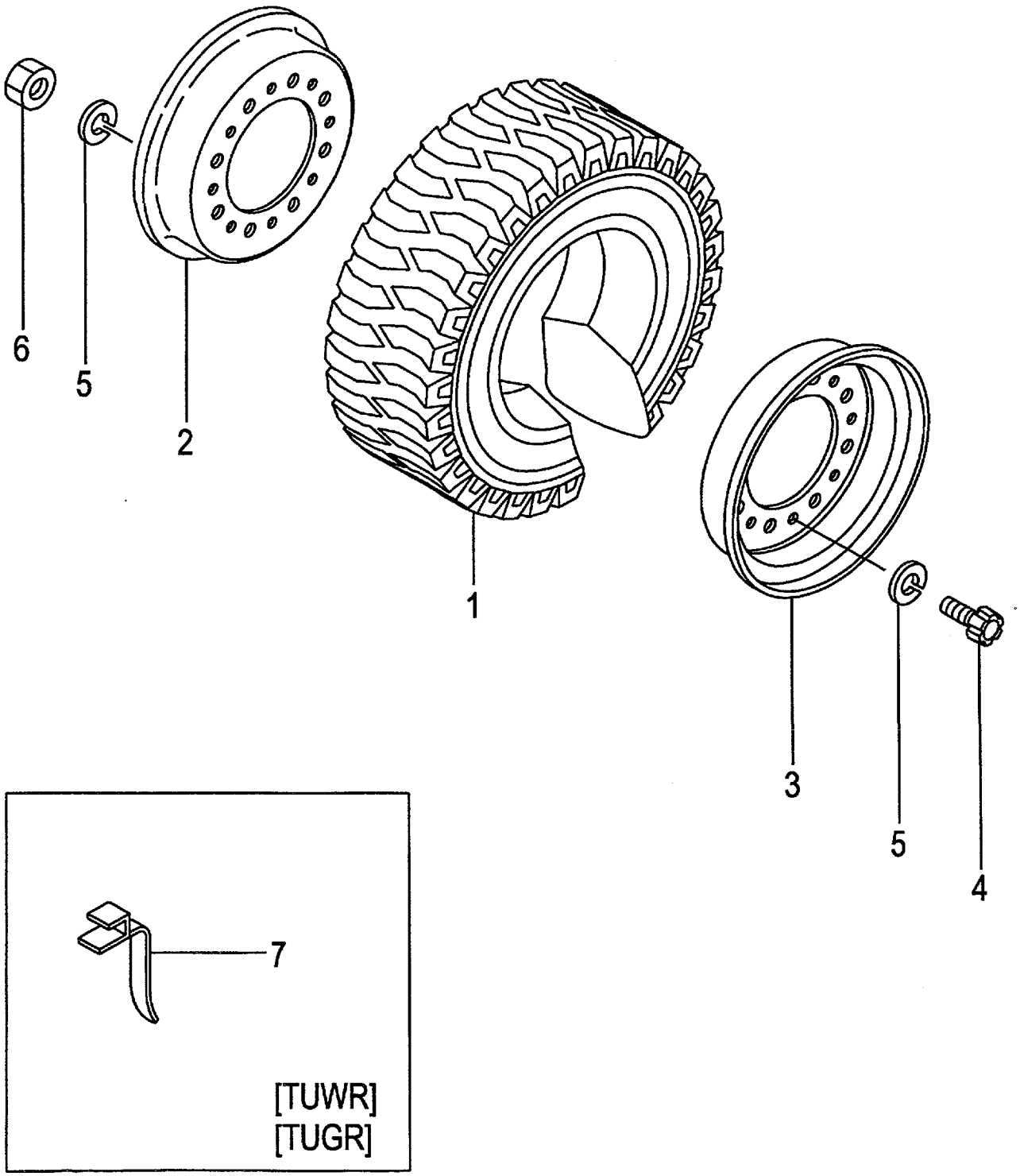

A:FG20C6H FG20T6H FG25C6H FG25T6H C:FD20C6H FD20T6H FD25C6H FD25T6H
B:FG20W6H FG25W6H D:FD20W6H FD25W6H

Item No	Part No.	Mark	Description		Req'd	Remarks : Serial No.
A1	53656-81301		WHEEL-ASSY,REAR	ﾘｱﾎｲｰﾙｱｯｾﾝ	2	[TUJR] INC.1-6
-	53656-81301		WHEEL-ASSY,REAR	ﾘｱﾎｲｰﾙｱｯｾﾝ	2	[TUJR] INC.1-6
-	522A3-80401		WHEEL-ASSY,REAR	ﾘｱﾎｲｰﾙｱｯｾﾝ	2	[TUJR] INC.1-6
-	522A3-80401		WHEEL-ASSY,REAR	ﾘｱﾎｲｰﾙｱｯｾﾝ	2	A,C [TUJR/EX] INC.1-6
-	522A6-80521		WHEEL-ASSY,REAR	ﾘｱﾎｲｰﾙｱｯｾﾝ	2	[TUSR] INC.1-6
-	522A6-80501		WHEEL-ASSY,REAR	ﾘｱﾎｲｰﾙｱｯｾﾝ	2	[TUWR] INC.1-6
-	522A6-80511		WHEEL-ASSY,REAR	ﾘｱﾎｲｰﾙｱｯｾﾝ	2	[TUGR] INC.1-6
1	06806-60009		TIRE,UNIQUE,600-9	ﾀｲﾔ	2	[TUJR]
-	06806-60009		TIRE,UNIQUE,600-9	ﾀｲﾔ	2	[TUJR]
-	06807-60009		TIRE,UNIQUE,600-9	ﾀｲﾔ	2	[TUJR]
-	06807-60009		TIRE,UNIQUE,600-9	ﾀｲﾔ	2	A,C [TUJR/EX]
-	06851-60009		TIRE,SOFTONE,600-9	ﾀｲﾔ	2	[TUSR]
-	06841-60009		TIRE,WHITE,600-9	ﾀｲﾔ	2	[TUWR]
-	06843-60009		TIRE,GREEN,600-9	ﾀｲﾔ	2	[TUGR]
A2	23654-40501		RIM-ASSY,400E-9	ﾘﾑｱｯｾﾝ	2	[TUJR][TUSR][TUWR][TUGR] INC.2-6
2	NO PART NO.	#	RIM,INSIDE	ﾘﾑ	2	[TUJR][TUSR][TUWR][TUGR]
3	NO PART NO.	#	RIM,OUTSIDE	ﾘﾑ	2	[TUJR][TUSR][TUWR][TUGR]
4	534F3-82001		BOLT	ﾎﾞﾙﾄ	16	[TUJR][TUSR][TUWR][TUGR]
5	02011-00012		WASHER	ﾜｯｼｬ	32	[TUJR][TUSR][TUWR][TUGR]
6	01400-00012		NUT	ﾅｯﾄ	16	[TUJR][TUSR][TUWR][TUGR]
7	571A6-82081		BELT,EARTH	ﾍﾞﾙﾄ	1	[TUWR][TUGR]

FIG.109 REAR WHEEL [TUJR/DR R]

(F5H244L0) リヤーホイール

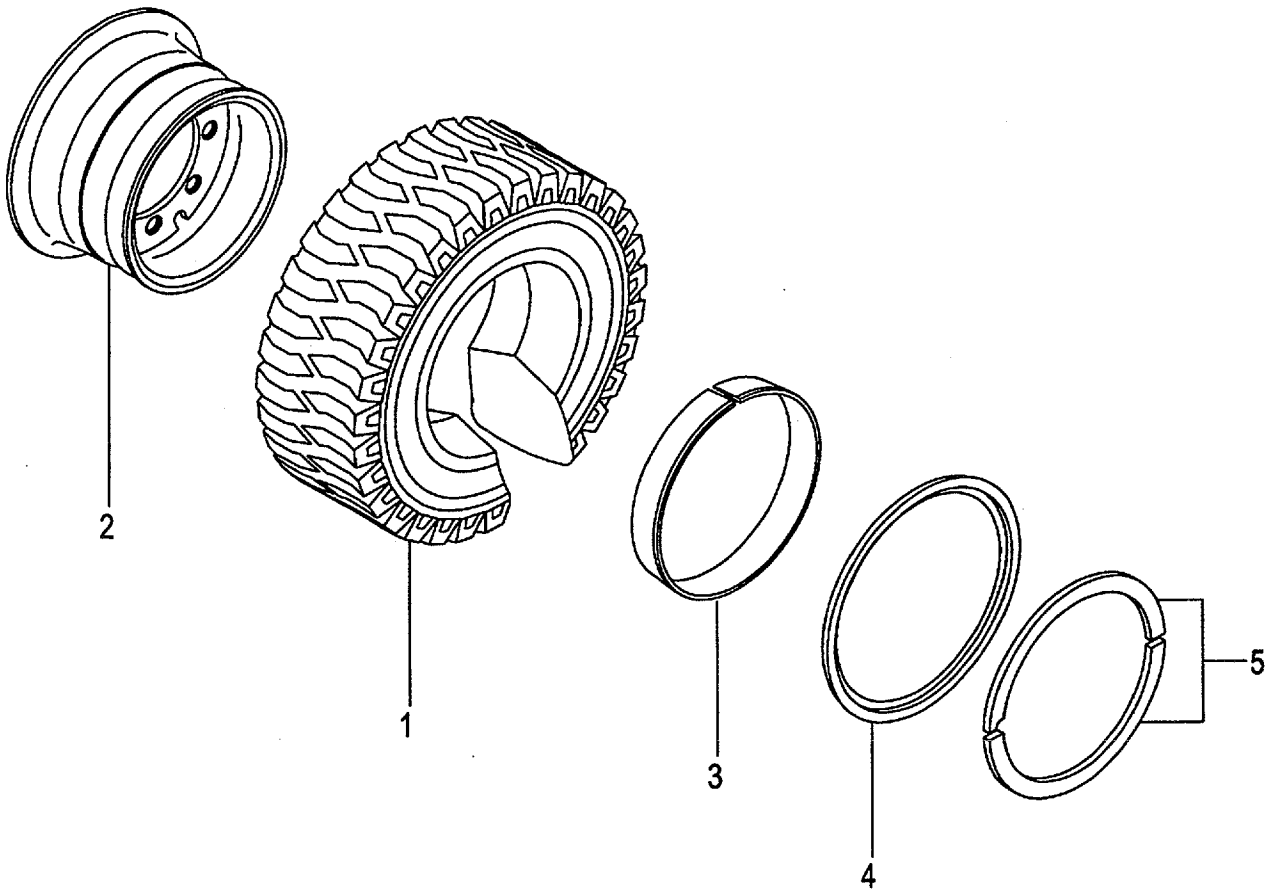

A:FG20C6H FG20T6H FG25C6H FG25T6H FG20W6H FG25W6H
B:FD20C6H FD20T6H FD25C6H FD25T6H FD20W6H FD25W6H

Item No	Part No.	Mark	Description		Req'd	Remarks : Serial No.
A1	53666-81301		WHEEL-ASSY,REAR	ﾘｱﾎｲｰﾙｱｯｾﾝ	2	[TUJR/DR R] INC.1-5
1	06806-60009		TIRE,UNIQUE,600-9	ﾀｲﾔ	2	[TUJR/DR R]
A2	53666-81901		RIM-ASSY,400E-9	ﾘﾑｱｯｾﾝ	2	[TUJR/DR R] INC.2-5
2	NO PART NO.	#	RIM	ﾘﾑ	2	[TUJR/DR R]
3	53666-82021		BAND	ﾊﾞﾝﾄﾞ	2	[TUJR/DR R]
4	53666-82031		FLANGE,SIDE	ﾌﾗﾝｼﾞ	2	[TUJR/DR R]
5	53666-82041		RING,LOCK	ﾘﾝｸﾞ	2	[TUJR/DR R]

FIG.110 REAR WHEEL [TRAR]

(F5H244M0) リヤーホイール

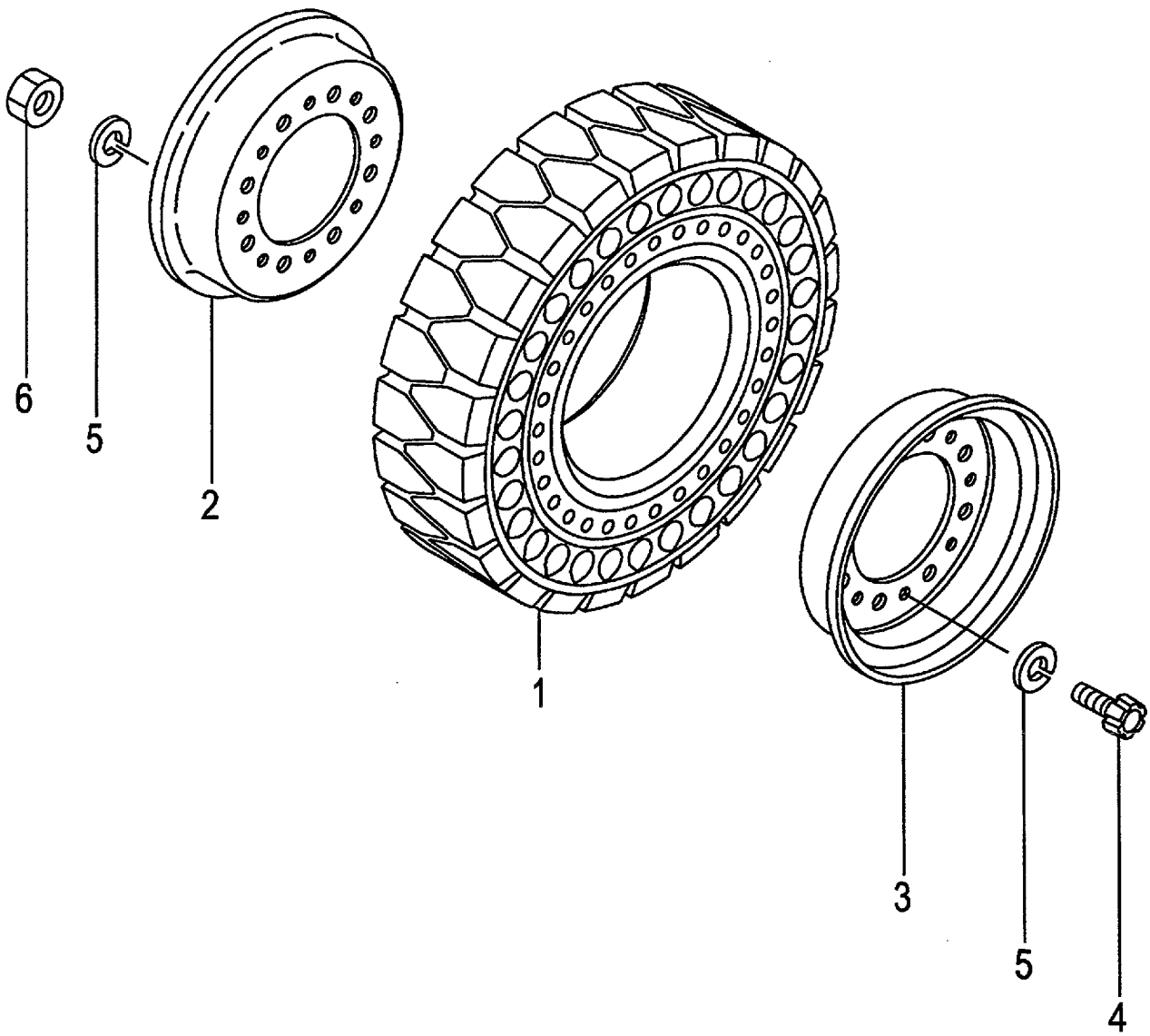

A:FG20C6H FG20T6H FG25C6H FG25T6H FG20W6H FG25W6H
B:FD20C6H FD20T6H FD25C6H FD25T6H FD20W6H FD25W6H

Item No	Part No.	Mark	Description		Req'd	Remarks : Serial No.
A1	534A6-80271		WHEEL-ASSY,REAR	ﾘｱﾎｲｰﾙｱｯｾﾝ	2	[TRAR] INC.1-6
1	534A6-85001		TIRE,AIR-BOSS,600-9	ﾀｲﾔ	2	[TRAR]
A2	23654-40501		RIM-ASSY,400E-9	ﾘﾑｱｯｾﾝ	2	[TRAR] INC.2-6
2	NO PART NO.	#	RIM,INSIDE	ﾘﾑ	2	[TRAR]
3	NO PART NO.	#	RIM,OUTSIDE	ﾘﾑ	2	[TRAR]
4	534F3-82001		BOLT	ﾎﾞﾙﾄ	16	[TRAR]
5	02011-00012		WASHER	ﾜｯｼｬ	32	[TRAR]
6	01400-00012		NUT	ﾅｯﾄ	16	[TRAR]

FIG.111 POWER CYLINDER

(F5H24510) ﾊﾟﾜｰｼﾘﾝﾀﾞ

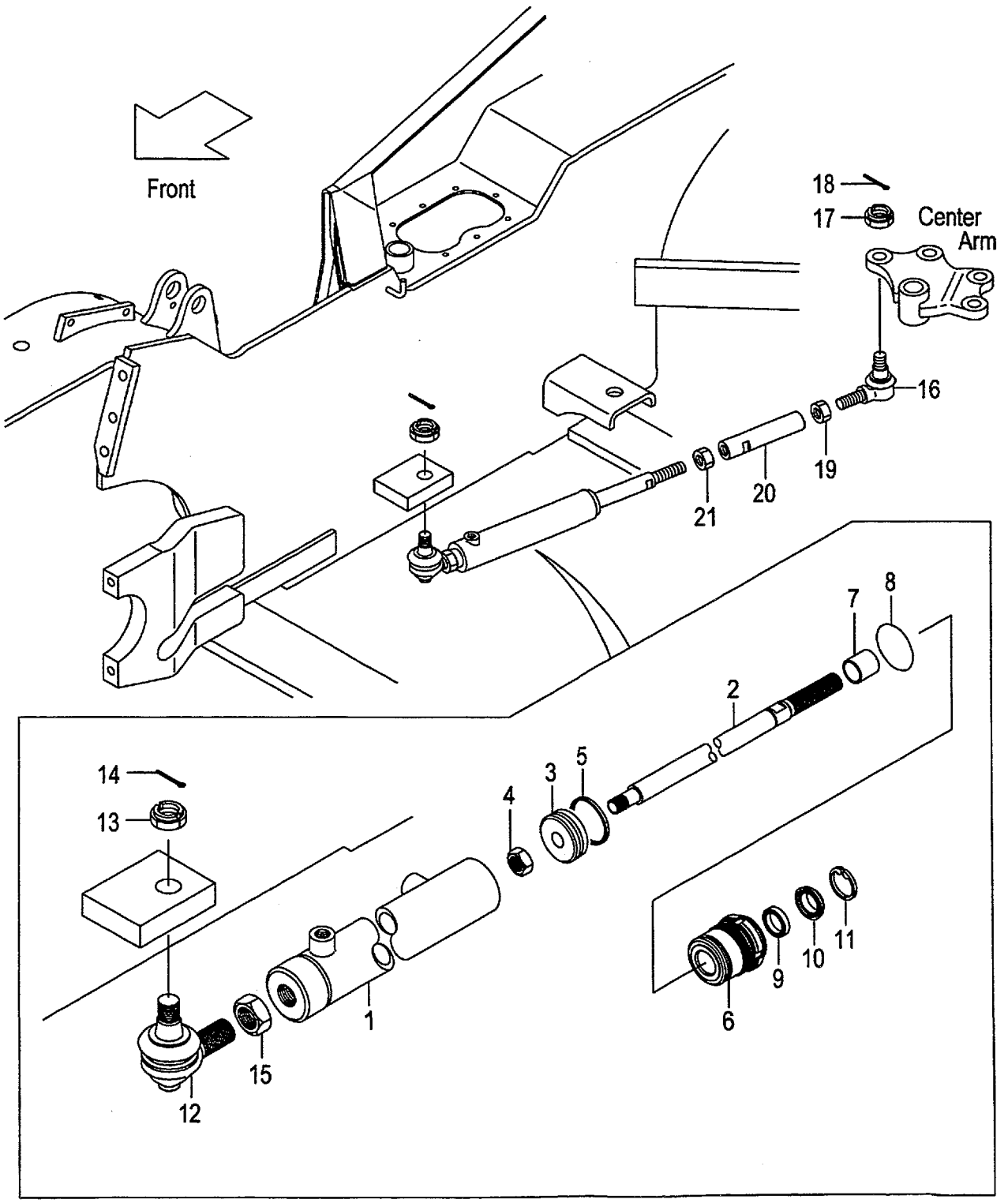

A:FG20C6H FG20T6H FG25C6H FG25T6H FG20W6H FG25W6H
B:FD20C6H FD20T6H FD25C6H FD25T6H FD20W6H FD25W6H

Item No	Part No.	Mark	Description		Req'd	Remarks : Serial No.
A1	239A4-50201		CYL-ASSY,PS	ﾊﾟﾜｽﾃｼﾘﾝﾀﾞｱｯｾﾝ	1	INC.1-15
1	214A4-50111		TUBE,CYL	ﾁｭｰﾌﾞ	1	
2	214A4-52041		ROD,PISTON	ﾛｯﾄﾞ	1	
3	214A4-52031		PISTON	ﾋﾟｽﾄﾝ	1	
4	01402-10018		NUT	ﾅｯﾄ	1	
5	25594-52362	*	SEAL,SLIPPER	ｼｰﾙ	1	
6	214A4-52021		CAP,CYL	ｷｬｯﾌﾟ	1	
7	25954-52061		BUSHING	ﾌﾞｯｼﾝｸﾞ	1	
8	03350-00450	*	O-RING	Oﾘﾝｸﾞ	1	
9	25954-52071	*	PACKING	ﾊﾟｯｷﾝｸﾞ	1	
10	25954-52081	*	SEAL,DUST	ｼｰﾙ	1	
11	25954-52091	*	RING,SNAP	ｽﾅｯﾌﾟﾘﾝｸﾞ	1	
A2	224W4-30341		END-ASSY,ROD,RH	ｴﾝﾄﾞｱｯｾﾝ	1	INC.12-15
12	NO PART NO.	#	END,ROD,RH	ｴﾝﾄﾞ	1	
13	01412-10020		NUT,CASTLE	ﾅｯﾄ	1	
14	02200-04040		PIN,COTTER	ﾋﾟﾝ	1	
15	01402-00024		NUT	ﾅｯﾄ	1	
A3	24234-30561		END-ASSY,ROD,LH	ｴﾝﾄﾞｱｯｾﾝ	1	INC.16-18
16	NO PART NO.	#	END,ROD,LH	ｴﾝﾄﾞ	1	
17	01412-10016		NUT,CASTLE	ﾅｯﾄ	2	
18	02200-32032		PIN,COTTER	ﾋﾟﾝ	2	
19	01407-00022		NUT,LH	ﾅｯﾄ	1	
20	214A4-52051		ROD,CONNECTING	ﾛｯﾄﾞ	1	
21	01402-00024		NUT	ﾅｯﾄ	1	
K1	214A4-59802		KIT,REPAIR	ﾘﾍﾟｱｷｯﾄ	1	INC.5,8-11

FIG.112 POWER CYLINDER [EXC][EXE][EXK][EXN][OBT]

(F5H24520) ﾊﾟﾜｰｼﾘﾝﾀﾞ

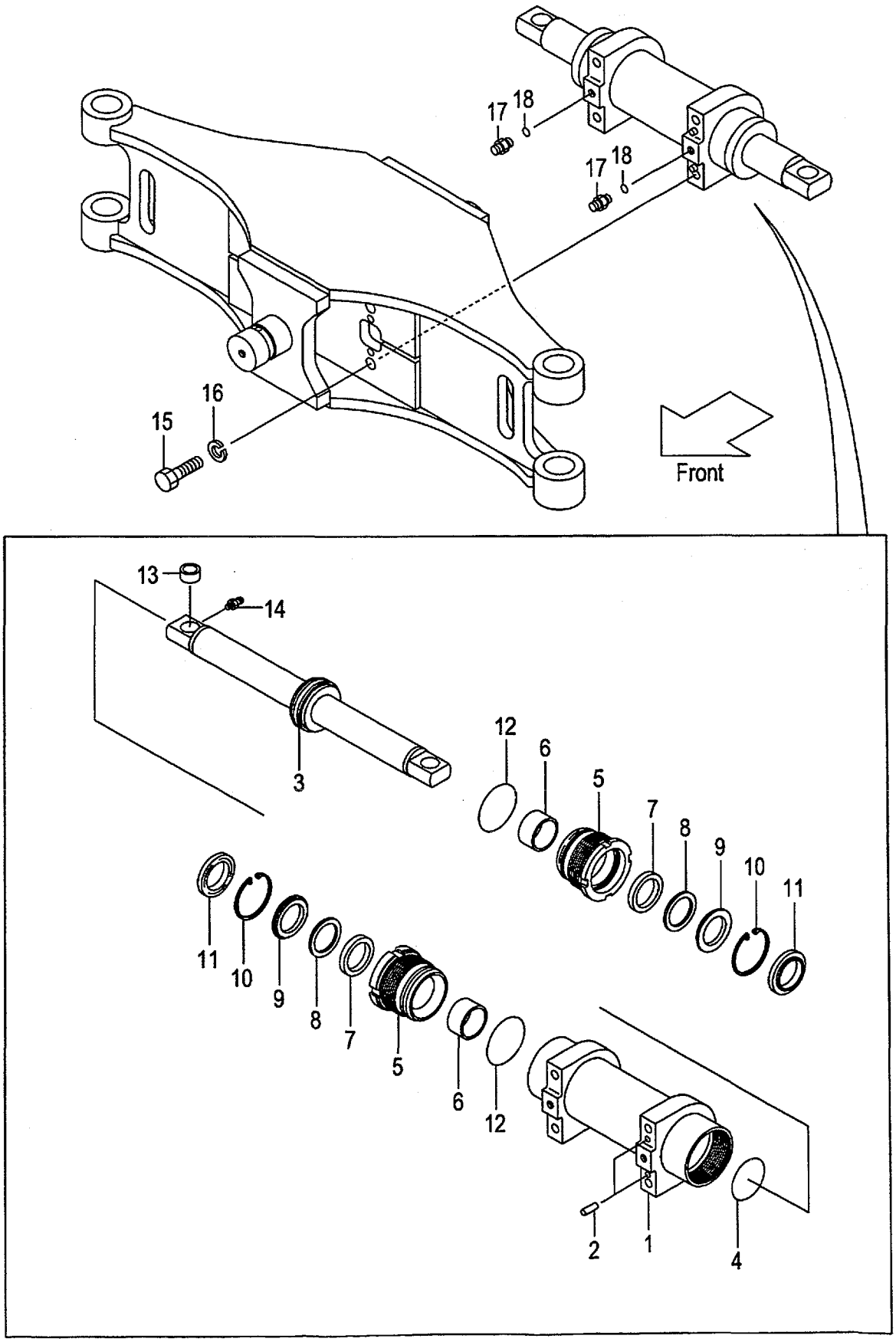

A:FG20C6H FG20T6H FG25C6H FG25T6H
B:FD20C6H FD20T6H FD25C6H FD25T6H

FIG.112
(F5H24520)

Item No	Part No.	Mark	Description		Req'd	Remarks : Serial No.
A1	533A2-40201		CYL-ASSY,PS	ﾊﾟﾜｽﾃｼﾘﾝﾀﾞｱｯｾﾝ	1	[EXC][EXE][EXK][EXN][OBT] [EXB/OBT] INC.1-14
1	514A2-40462		TUBE,CYL	ﾁｭｰﾌﾞ	1	[EXC][EXE][EXK][EXN][OBT] [EXB/OBT]
2	02212-10020		PIN,PARALLEL	ﾋﾟﾝ	2	[EXC][EXE][EXK][EXN][OBT] [EXB/OBT]
A2	533A2-40211		ROD-ASSY,PISTON	ﾋﾟｽﾄﾝﾛｯﾄﾞｱｯｾﾝ	1	[EXC][EXE][EXK][EXN][OBT] [EXB/OBT] INC.3,4
3	533A2-42001		ROD,PISTON	ﾛｯﾄﾞ	1	[EXC][EXE][EXK][EXN][OBT] [EXB/OBT]
4	25784-52342	*	SEAL	ｼｰﾙ	1	[EXC][EXE][EXK][EXN][OBT] [EXB/OBT]
5	215B4-52122		CAP,CYL	ｷｬｯﾌﾟ	2	[EXC][EXE][EXK][EXN][OBT] [EXB/OBT]
6	59595-55301		BUSHING	ﾌﾞｯｼﾝｸﾞ	2	[EXC][EXE][EXK][EXN][OBT] [EXB/OBT]
7	25958-52201	*	PACKING	ﾊﾟｯｷﾝｸﾞ	2	[EXC][EXE][EXK][EXN][OBT] [EXB/OBT]
8	25958-52211	*	RING,BACK-UP	ﾘﾝｸﾞ	2	[EXC][EXE][EXK][EXN][OBT] [EXB/OBT]
9	25958-52221		RETAINER	ﾘﾃｰﾅ	2	[EXC][EXE][EXK][EXN][OBT] [EXB/OBT]
10	02110-00062	*	RING,SNAP	ｽﾅｯﾌﾟﾘﾝｸﾞ	2	[EXC][EXE][EXK][EXN][OBT] [EXB/OBT]
11	24469-42701	*	SEAL,DUST	ｼｰﾙ	2	[EXC][EXE][EXK][EXN][OBT] [EXB/OBT]
12	214A8-52221	*	O-RING	Oﾘﾝｸﾞ	2	[EXC][EXE][EXK][EXN][OBT] [EXB/OBT]
13	533A2-42021		BUSH	ﾌﾞｯｼﾝｸﾞ	2	[EXC][EXE][EXK][EXN][OBT] [EXB/OBT]
14	214A8-52051		NIPPLE,GREASE	ﾆｯﾌﾟﾙ	2	[EXC][EXE][EXK][EXN][OBT] [EXB/OBT]
15	01100-14035		BOLT	ﾎﾞﾙﾄ	4	[EXC][EXE][EXK][EXN][OBT] [EXB/OBT]
16	02010-00014		WASHER	ﾜｯｼｬ	4	[EXC][EXE][EXK][EXN][OBT] [EXB/OBT]
A3	224W7-62701		NIPPLE-ASSY	ﾆｯﾌﾟﾙｱｯｾﾝ	2	[EXC][EXE][EXK][EXN][OBT] [EXB/OBT] INC.17,18
17	NO PART NO.	#	NIPPLE	ﾆｯﾌﾟﾙ	2	[EXC][EXE][EXK][EXN][OBT] [EXB/OBT]
18	03320-00110		O-RING	Oﾘﾝｸﾞ	2	[EXC][EXE][EXK][EXN][OBT] [EXB/OBT]
K1	514A2-49803		KIT,REPAIR	ﾘﾍﾟｱｷｯﾄ	1	[EXC][EXE][EXK][EXN][OBT] [EXB/OBT] INC.4,7,8,10-12

FIG.113 POWER CYLINDER [(EXC,EXE,EXK,EXN)/PSS]

(F5H24530) ﾊﾟﾜｰｼﾘﾝﾀﾞ

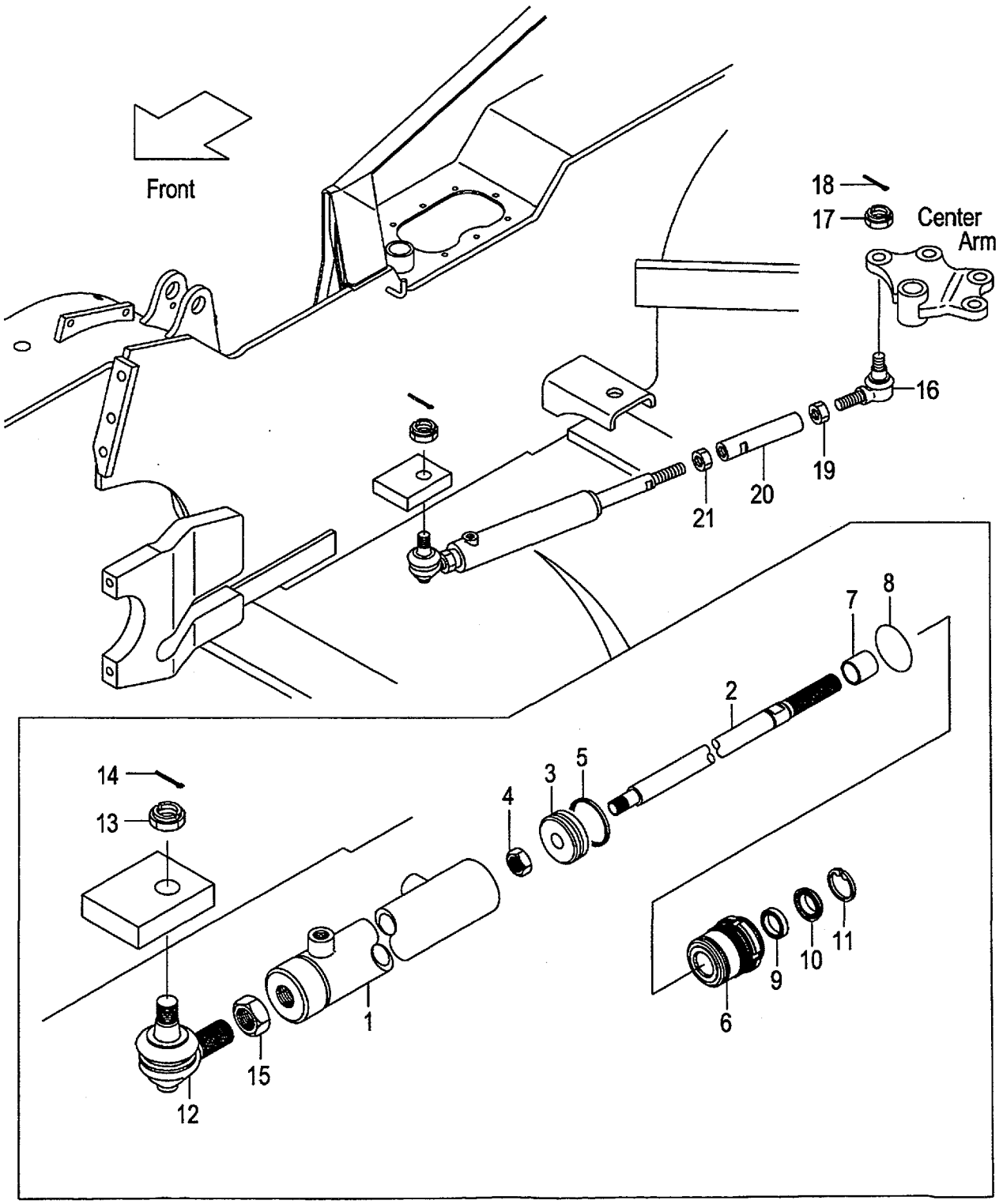

A:FG20C6H FG20T6H FG25C6H FG25T6H
B:FD20C6H FD20T6H FD25C6H FD25T6H

Item No	Part No.	Mark	Description		Req'd	Remarks : Serial No.
A1	239A4-50201		CYL-ASSY,PS	ﾊﾟﾜｽﾃｼﾘﾝﾀﾞｱｯｾﾝ	1	[EXC/PSS][EXE/PSS][EXK/PSS] [EXN/PSS] INC.1-15
1	214A4-50111		TUBE,CYL	ﾁｭｰﾌﾞ	1	[EXC/PSS][EXE/PSS][EXK/PSS] [EXN/PSS]
2	214A4-52041		ROD,PISTON	ﾛｯﾄﾞ	1	[EXC/PSS][EXE/PSS][EXK/PSS] [EXN/PSS]
3	214A4-52031		PISTON	ﾋﾟｽﾄﾝ	1	[EXC/PSS][EXE/PSS][EXK/PSS] [EXN/PSS]
4	01402-10018		NUT	ﾅｯﾄ	1	[EXC/PSS][EXE/PSS][EXK/PSS] [EXN/PSS]
5	25594-52362	*	SEAL,SLIPPER	ｼｰﾙ	1	[EXC/PSS][EXE/PSS][EXK/PSS] [EXN/PSS]
6	214A4-52021		CAP,CYL	ｷｬｯﾌﾟ	1	[EXC/PSS][EXE/PSS][EXK/PSS] [EXN/PSS]
7	25954-52061		BUSHING	ﾌﾞｯｼﾝｸﾞ	1	[EXC/PSS][EXE/PSS][EXK/PSS] [EXN/PSS]
8	03350-00450	*	O-RING	Oﾘﾝｸﾞ	1	[EXC/PSS][EXE/PSS][EXK/PSS] [EXN/PSS]
9	25954-52071	*	PACKING	ﾊﾟｯｷﾝｸﾞ	1	[EXC/PSS][EXE/PSS][EXK/PSS] [EXN/PSS]
10	25954-52081	*	SEAL,DUST	ｼｰﾙ	1	[EXC/PSS][EXE/PSS][EXK/PSS] [EXN/PSS]
11	25954-52091	*	RING,SNAP	ｽﾅｯﾌﾟﾘﾝｸﾞ	1	[EXC/PSS][EXE/PSS][EXK/PSS] [EXN/PSS]
A2	224W4-30341		END-ASSY,ROD,RH	ｴﾝﾄﾞｱｯｾﾝ	1	[EXC/PSS][EXE/PSS][EXK/PSS] [EXN/PSS] INC.12-15
12	NO PART NO.	#	END,ROD,RH	ｴﾝﾄﾞ	1	[EXC/PSS][EXE/PSS][EXK/PSS] [EXN/PSS]
13	01412-10020		NUT,CASTLE	ﾅｯﾄ	1	[EXC/PSS][EXE/PSS][EXK/PSS] [EXN/PSS]
14	02200-04040		PIN,COTTER	ﾋﾟﾝ	1	[EXC/PSS][EXE/PSS][EXK/PSS] [EXN/PSS]
15	01402-00024		NUT	ﾅｯﾄ	1	[EXC/PSS][EXE/PSS][EXK/PSS] [EXN/PSS]
A3	24234-30561		END-ASSY,ROD,LH	ｴﾝﾄﾞｱｯｾﾝ	1	[EXC/PSS][EXE/PSS][EXK/PSS] [EXN/PSS] INC.16-18
16	NO PART NO.	#	END,ROD,LH	ｴﾝﾄﾞ	1	[EXC/PSS][EXE/PSS][EXK/PSS] [EXN/PSS]
17	01412-10016		NUT,CASTLE	ﾅｯﾄ	2	[EXC/PSS][EXE/PSS][EXK/PSS] [EXN/PSS]
18	02200-32032		PIN,COTTER	ﾋﾟﾝ	2	[EXC/PSS][EXE/PSS][EXK/PSS] [EXN/PSS]
19	01407-00022		NUT,LH	ﾅｯﾄ	1	[EXC/PSS][EXE/PSS][EXK/PSS] [EXN/PSS]
20	214A4-52051		ROD,CONNECTING	ﾛｯﾄﾞ	1	[EXC/PSS][EXE/PSS][EXK/PSS] [EXN/PSS]
21	01402-00024		NUT	ﾅｯﾄ	1	[EXC/PSS][EXE/PSS][EXK/PSS] [EXN/PSS]
K1	214A4-59802		KIT,REPAIR	ﾘﾍﾟｱｷｯﾄ	1	[EXC/PSS][EXE/PSS][EXK/PSS] [EXN/PSS] INC.5,8-11

FIG.114 POWER CYLINDER BOOT [PSB][FC][RINFC]

(F5H24540) ﾊﾟﾜｰｼﾘﾝﾀﾞﾌﾞｰﾂ

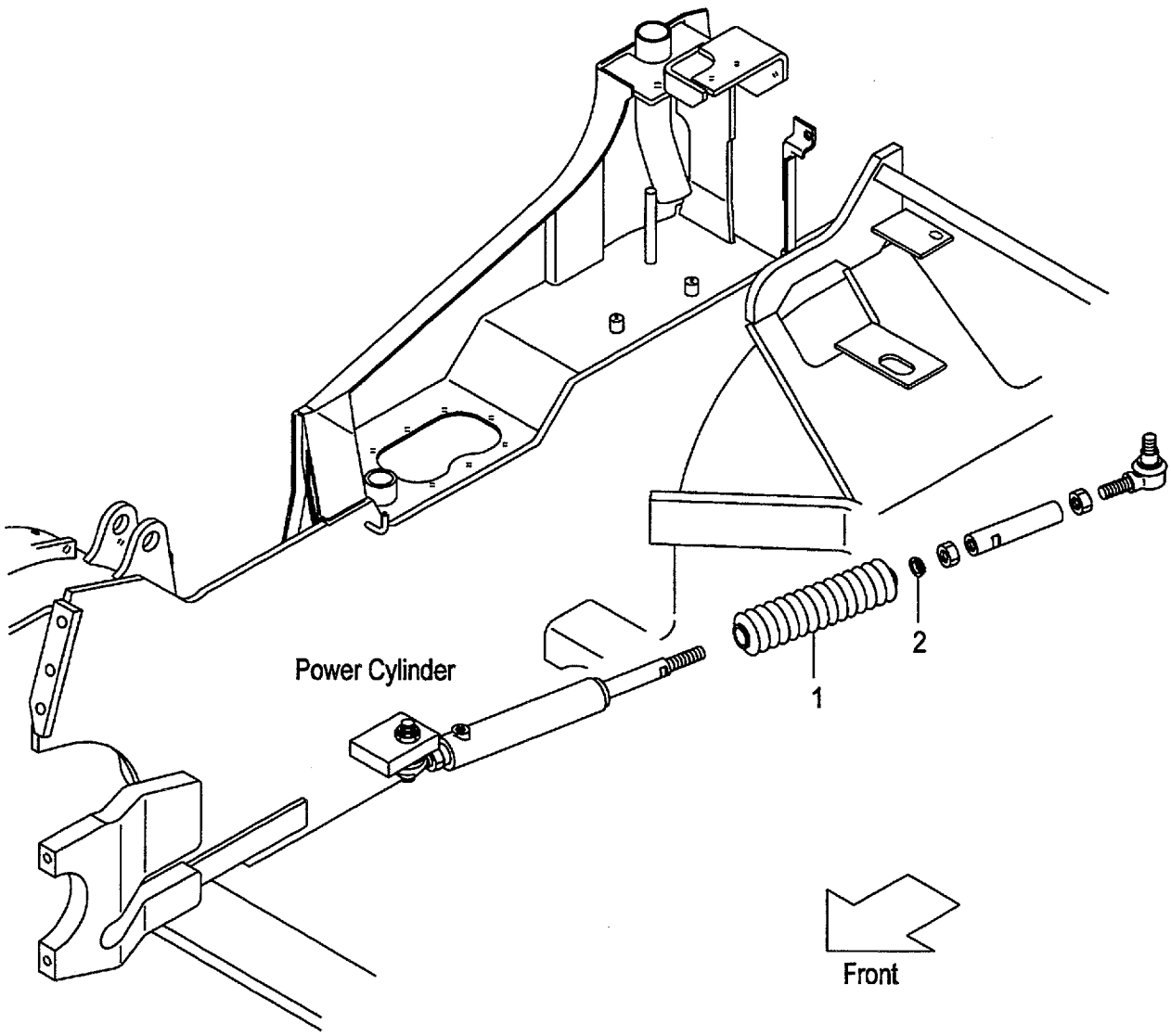

FIG.114
(F5H24540)

A:FG20C6H FG20T6H FG25C6H FG25T6H FG20W6H FG25W6H
B:FD20C6H FD20T6H FD25C6H FD25T6H FD20W6H FD25W6H

Item No	Part No.	Mark	Description	Req'd	Remarks : Serial No.
1	25594-52431		BOOT,POWER-CYL ﾌﾞｰﾂ	1	[PSB][FC][RINFC]
2	23654-52021		HANGER,BOOT ﾊﾝｶﾞ	1	[PSB][FC][RINFC]

FIG.115 OVERHEAD GUARD

(F5H25110) オーバヘッドガード

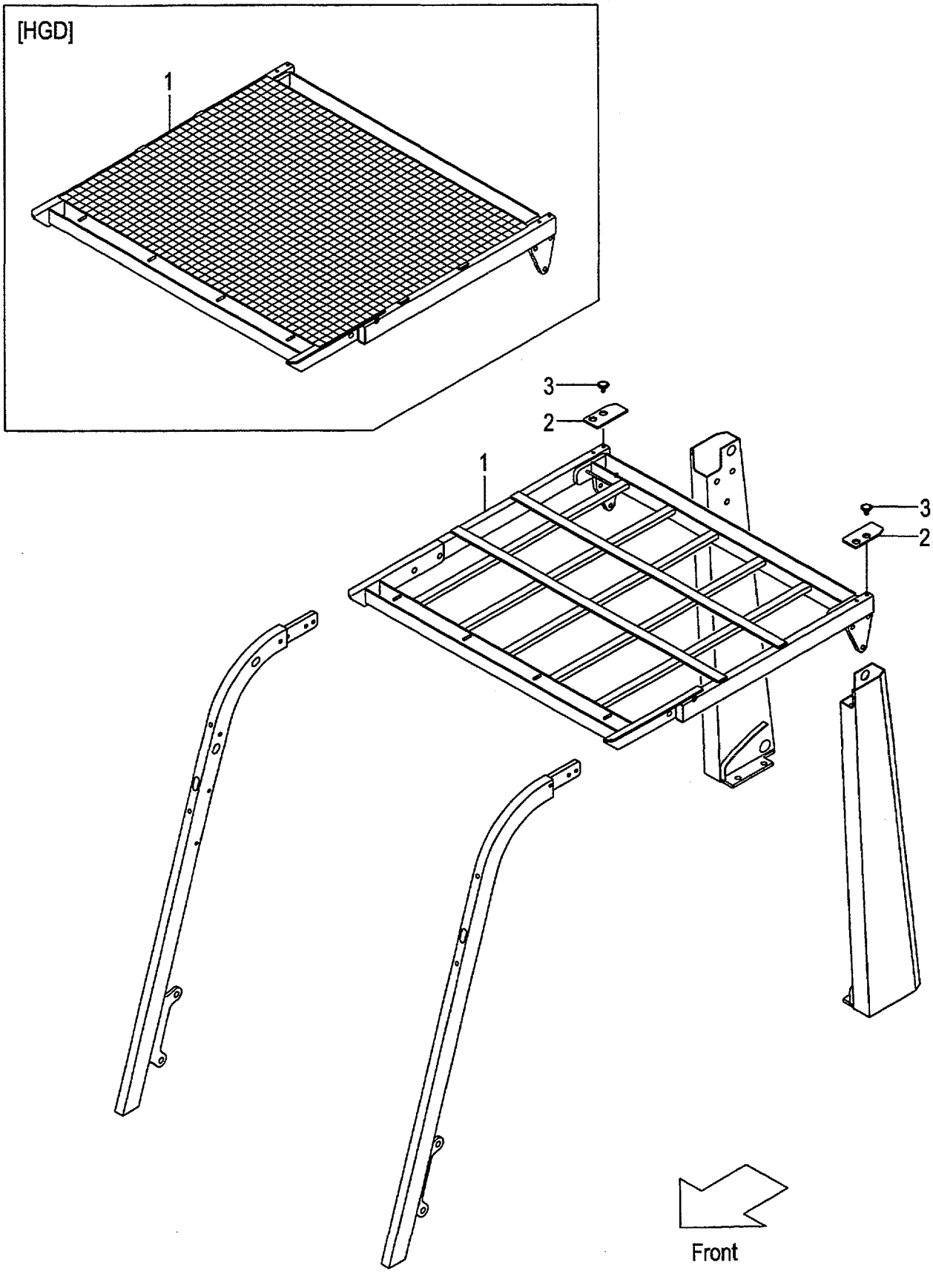

A:FG20C6H FG20T6H FG25C6H FG25T6H FG20W6H FG25W6H
B:FD20C6H FD20T6H FD25C6H FD25T6H FD20W6H FD25W6H

Item No	Part No.	Mark	Description		Req'd	Remarks : Serial No.
1	218M5-10401		GUARD,HEAD	ｶﾞｰﾄﾞ	1	
-	539A2-90201		GUARD,HEAD	ｶﾞｰﾄﾞ	1	[HGD]
-	539A5-00401		GUARD,HEAD	ｶﾞｰﾄﾞ	1	[HGH060]
-	539A5-00501		GUARD,HEAD	ｶﾞｰﾄﾞ	1	[HGH150]
2	218M5-12501		COVER	ｶﾊﾞｰ	2	
3	216G6-42541		CLIP	ｸﾘｯﾌﾟ	4	

FIG.116 OVERHEAD GUARD [EXB][EXC][EXE][EXK][EXN]

(F5H25180) ｵｰﾊﾞﾍｯﾄﾞｶﾞｰﾄﾞ

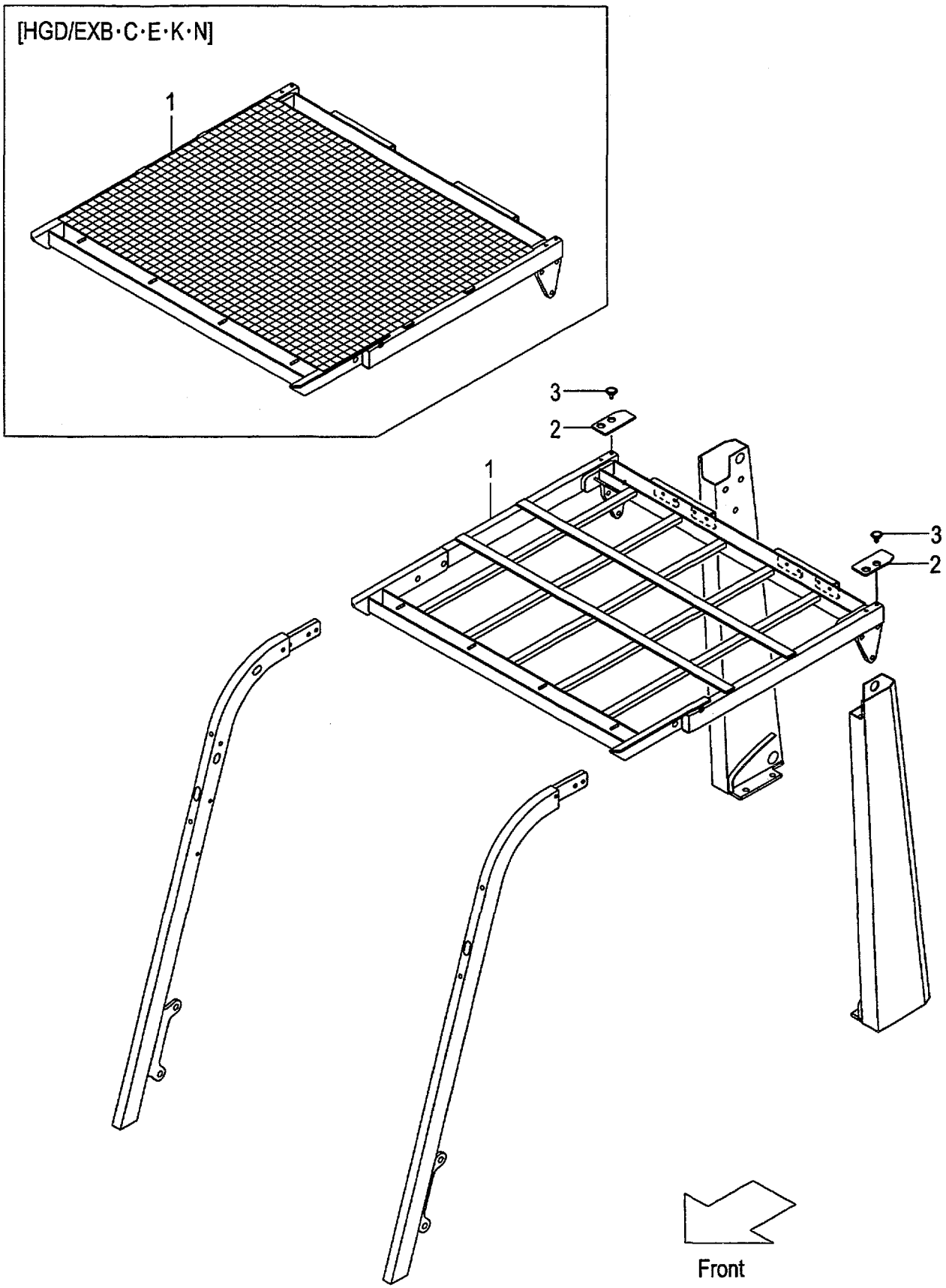

FIG.116
(F5H25180)

A:FG20C6H FG20T6H FG25C6H FG25T6H
B:FD20C6H FD20T6H FD25C6H FD25T6H

Item No	Part No.	Mark	Description		Req'd	Remarks : Serial No.
1	518G2-80231		GUARD,HEAD	ｶﾞｰﾄﾞ	1	[EXB][EXC][EXE][EXK]
-	539A2-60231		GUARD,HEAD	ｶﾞｰﾄﾞ	1	[EXN]
-	539A2-90301		GUARD,HEAD	ｶﾞｰﾄﾞ	1	[HGD/EXB][HGD/EXC][HGD/EXE] [HGD/EXK]
-	539A2-90401		GUARD,HEAD	ｶﾞｰﾄﾞ	1	[HGD/EXN]
2	218M5-12501		COVER	ｶﾊﾞｰ	2	[EXB][EXC][EXE][EXK][EXN]
3	216G6-42541		CLIP	ｸﾘｯﾌﾟ	4	[EXB][EXC][EXE][EXK][EXN]

FIG.117 FRONT PIPE

(F5H25120) フロントパイプ

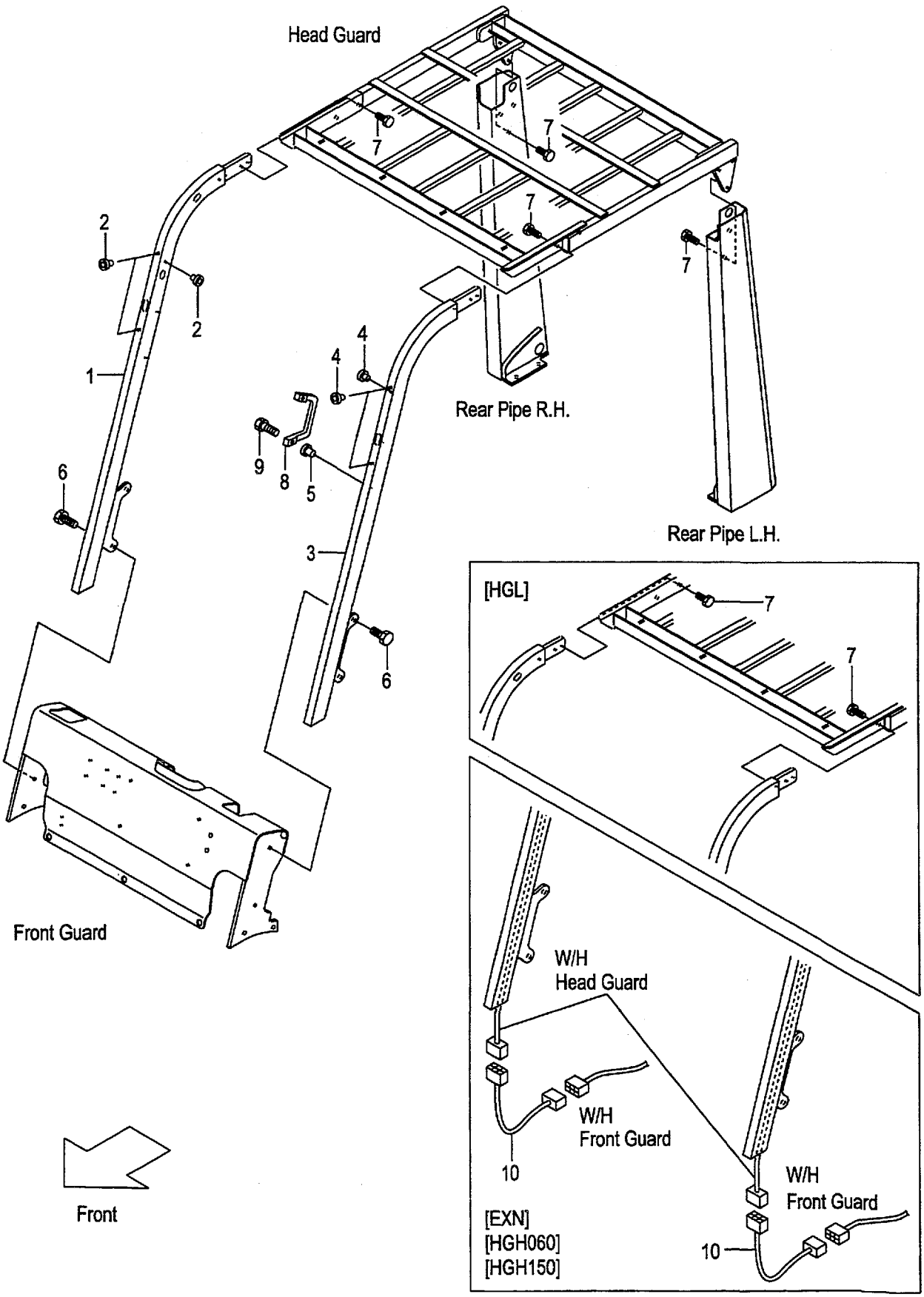

A:FG20C6H FG20T6H FG25C6H FG25T6H C:FD20C6H FD20T6H FD25C6H FD25T6H
B:FG20W6H FG25W6H D:FD20W6H FD25W6H

Item No	Part No.	Mark	Description		Req'd	Remarks : Serial No.
A1	239A5-10341		PIPE-ASSY,FRONT,RH	ﾌﾛﾝﾄﾊﾟｲﾌﾟｱｯｾﾝ	1	INC.1,2
-	539A5-00151		PIPE-ASSY,FRONT,RH	ﾌﾛﾝﾄﾊﾟｲﾌﾟｱｯｾﾝ	1	A,C
						[EXN] INC.1,2
-	236A5-10341		PIPE-ASSY,FRONT,RH	ﾌﾛﾝﾄﾊﾟｲﾌﾟｱｯｾﾝ	1	[HGL] INC.1,2
-	539A5-00151		PIPE-ASSY,FRONT,RH	ﾌﾛﾝﾄﾊﾟｲﾌﾟｱｯｾﾝ	1	[HGH060] INC.1,2
-	539A5-00171		PIPE-ASSY,FRONT,RH	ﾌﾛﾝﾄﾊﾟｲﾌﾟｱｯｾﾝ	1	[HGH150] INC.1,2
1	NO PART NO.	#	PIPE,FRONT,RH	ﾊﾟｲﾌﾟ	1	
-	NO PART NO.	#	PIPE,FRONT,RH	ﾊﾟｲﾌﾟ	1	A,C
						[EXN]
-	NO PART NO.	#	PIPE,FRONT,RH	ﾊﾟｲﾌﾟ	1	[HGL]
-	NO PART NO.	#	PIPE,FRONT,RH	ﾊﾟｲﾌﾟ	1	[HGH060]
-	NO PART NO.	#	PIPE,FRONT,RH	ﾊﾟｲﾌﾟ	1	[HGH150]
2	514A5-12011		RIVET,POP	ﾘﾍﾞｯﾄ	3	
A2	239A5-10351		PIPE-ASSY,FRONT,LH	ﾌﾛﾝﾄﾊﾟｲﾌﾟｱｯｾﾝ	1	INC.3-5
-	539A5-00161		PIPE-ASSY,FRONT,LH	ﾌﾛﾝﾄﾊﾟｲﾌﾟｱｯｾﾝ	1	A,C
						[EXN] INC.3-5
-	236A5-10351		PIPE-ASSY,FRONT,LH	ﾌﾛﾝﾄﾊﾟｲﾌﾟｱｯｾﾝ	1	[HGL] INC.3-5
-	539A5-00161		PIPE-ASSY,FRONT,LH	ﾌﾛﾝﾄﾊﾟｲﾌﾟｱｯｾﾝ	1	[HGH060] INC.3-5
-	539A5-00181		PIPE-ASSY,FRONT,LH	ﾌﾛﾝﾄﾊﾟｲﾌﾟｱｯｾﾝ	1	[HGH150] INC.3-5
3	NO PART NO.	#	PIPE,FRONT,LH	ﾊﾟｲﾌﾟ	1	
-	NO PART NO.	#	PIPE,FRONT,LH	ﾊﾟｲﾌﾟ	1	A,C
						[EXN]
-	NO PART NO.	#	PIPE,FRONT,LH	ﾊﾟｲﾌﾟ	1	[HGL]
-	NO PART NO.	#	PIPE,FRONT,LH	ﾊﾟｲﾌﾟ	1	[HGH060]
-	NO PART NO.	#	PIPE,FRONT,LH	ﾊﾟｲﾌﾟ	1	[HGH150]
4	514A5-12011		RIVET,POP	ﾘﾍﾞｯﾄ	3	
5	516G5-13151		RIVET,POP	ﾘﾍﾞｯﾄ	2	
6	01186-12025		BOLT	ﾎﾞﾙﾄ	4	
7	01186-12035		BOLT	ﾎﾞﾙﾄ	10	
8	516G5-13051		GRIP	ｸﾞﾘｯﾌﾟ	1	
9	01171-06025		BOLT	ﾎﾞﾙﾄ	2	
10	229F2-42141		WIRE-HARNESS,R-COMBINATION	ﾜｲﾔﾊｰﾈｽ	2	A,C
						[EXN]
-	229F2-42141		WIRE-HARNESS,R-COMBINATION	ﾜｲﾔﾊｰﾈｽ	2	[HGH060][HGH150]

FIG.118 REAR PIPE

(F5H25130) リヤーパイプ

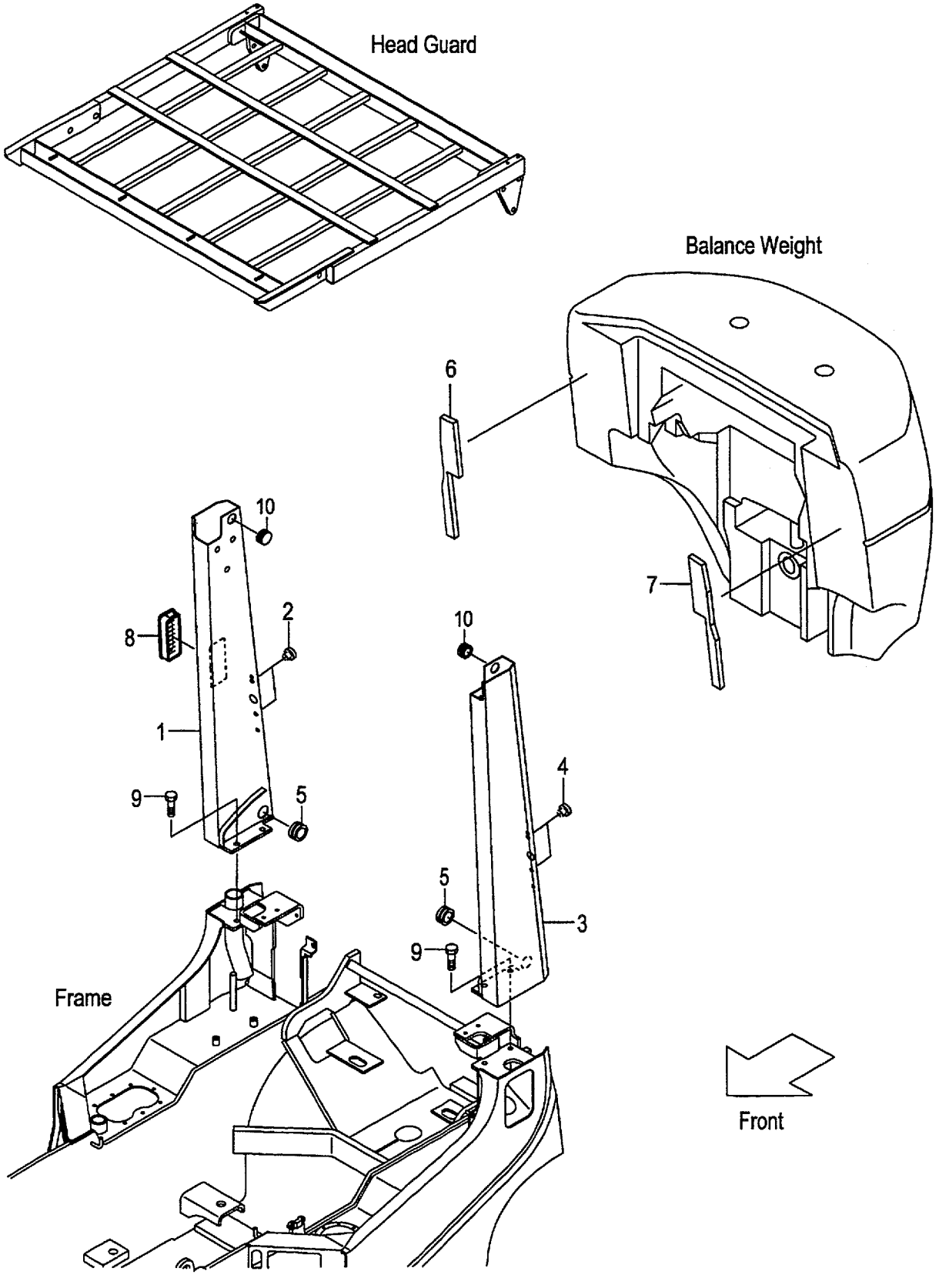

A:FG20C6H FG20T6H FG20W6H C:FD20C6H FD20T6H FD20W6H
B:FG25C6H FG25T6H FG25W6H D:FD25C6H FD25T6H FD25W6H

Item No	Part No.	Mark	Description		Req'd	Remarks : Serial No.
A1	239A5-10111		PIPE-ASSY,REAR,RH	ﾘﾔｰﾊﾟｲﾌﾟｱｯｾﾝ	1	(WITHOUT SCB001,SCBCR) INC.1,2
-	218G5-10111		PIPE-ASSY,REAR,RH	ﾘﾔｰﾊﾟｲﾌﾟｱｯｾﾝ	1	[HGL] INC.1,2
-	539A5-00111		PIPE-ASSY,REAR,RH	ﾘﾔｰﾊﾟｲﾌﾟｱｯｾﾝ	1	[HGH060] INC.1,2
-	539A5-00131		PIPE-ASSY,REAR,RH	ﾘﾔｰﾊﾟｲﾌﾟｱｯｾﾝ	1	[HGH150] INC.1,2
-	539A0-90111		PIPE-ASSY,REAR,RH	ﾘﾔｰﾊﾟｲﾌﾟｱｯｾﾝ	1	[CAKB] INC.1,2 (WITHOUT CAKB/SCB001, CAKB/SCBCR)
1	NO PART NO.	#	PIPE,REAR,RH	ﾊﾟｲﾌﾟ	1	(WITHOUT SCB001,SCBCR)
-	NO PART NO.	#	PIPE,REAR,RH	ﾊﾟｲﾌﾟ	1	[HGL]
-	NO PART NO.	#	PIPE,REAR,RH	ﾊﾟｲﾌﾟ	1	[HGH060]
-	NO PART NO.	#	PIPE,REAR,RH	ﾊﾟｲﾌﾟ	1	[HGH150]
-	NO PART NO.	#	PIPE,REAR,RH	ﾊﾟｲﾌﾟ	1	[CAKB] (WITHOUT CAKB/SCB001, CAKB/SCBCR)
2	514A5-12011		RIVET,POP	ﾘﾍﾞｯﾄ	2	(WITHOUT SCB001,SCBCR)
A2	239A5-10121		PIPE-ASSY,REAR,LH	ﾘﾔｰﾊﾟｲﾌﾟｱｯｾﾝ	1	(WITHOUT SCB001,SCBCR) INC.3,4
-	218G5-10121		PIPE-ASSY,REAR,LH	ﾘﾔｰﾊﾟｲﾌﾟｱｯｾﾝ	1	[HGL] INC.3,4
-	539A5-00121		PIPE-ASSY,REAR,LH	ﾘﾔｰﾊﾟｲﾌﾟｱｯｾﾝ	1	[HGH060] INC.3,4
-	539A5-00141		PIPE-ASSY,REAR,LH	ﾘﾔｰﾊﾟｲﾌﾟｱｯｾﾝ	1	[HGH150] INC.3,4
3	NO PART NO.	#	PIPE,REAR,LH	ﾊﾟｲﾌﾟ	1	(WITHOUT SCB001,SCBCR)
-	NO PART NO.	#	PIPE,REAR,LH	ﾊﾟｲﾌﾟ	1	[HGL]
-	NO PART NO.	#	PIPE,REAR,LH	ﾊﾟｲﾌﾟ	1	[HGH060]
-	NO PART NO.	#	PIPE,REAR,LH	ﾊﾟｲﾌﾟ	1	[HGH150]
4	514A5-12011		RIVET,POP	ﾘﾍﾞｯﾄ	2	(WITHOUT SCB001,SCBCR)
5	524W5-12091		GROMMET	ｸﾞﾛﾒｯﾄ	2	(WITHOUT SCB001,SCBCR)
6	239A5-12401		RUBBER,WEIGHT,RH	ﾗﾊﾞｰ	1	(WITHOUT SCB001,SCBCR)
7	239A5-12411		RUBBER,WEIGHT,LH	ﾗﾊﾞｰ	1	(WITHOUT SCB001,SCBCR)
8	230C1-02041		COVER,AIR-INTAKE	ｶﾊﾞｰ	1	(WITHOUT CAKB,SCB001,SCBCR)
9	01186-12025		BOLT	ﾎﾞﾙﾄ	4	(WITHOUT SCB001,SCBCR)
10	27662-62721		GROMMET	ｸﾞﾛﾒｯﾄ	2	A,B:15010- C,D:135- (WITHOUT SCB001,SCBCR)

FIG.119 REAR PIPE [EXB][EXC][EXE][EXK][EXN]

(F5H25140) リヤーパイプ

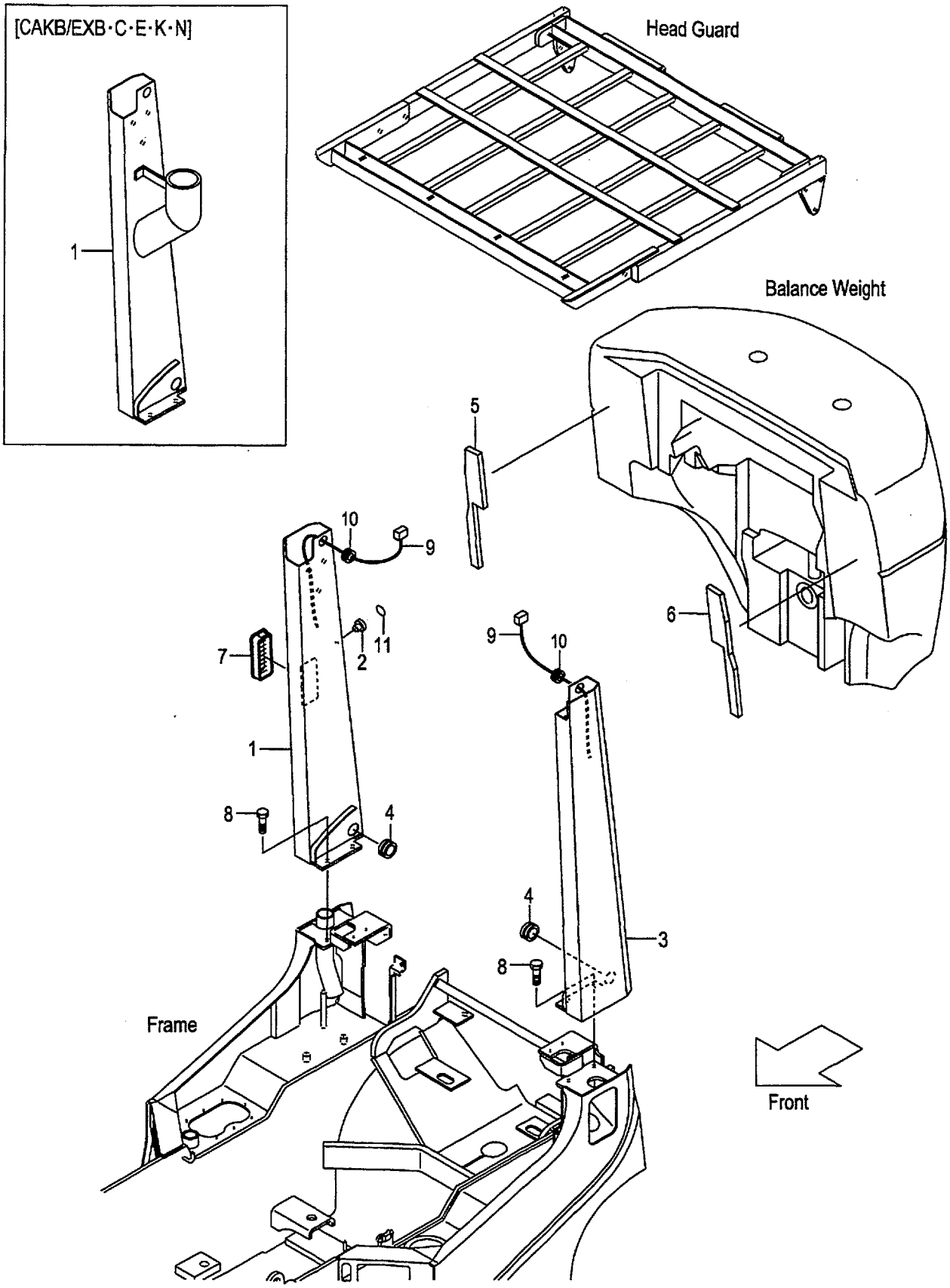

A:FG20C6H FG20T6H FG25C6H FG25T6H
B:FD20C6H FD20T6H FD25C6H FD25T6H

Item No	Part No.	Mark	Description		Req'd	Remarks : Serial No.
A1	539A2-80111		PIPE-ASSY,REAR,RH	ﾘﾔｰﾊﾟｲﾌﾟｱｯｾﾝ	1	[EXB][EXC][EXE][EXK] INC.1,2
-	539A2-60111		PIPE-ASSY,REAR,RH	ﾘﾔｰﾊﾟｲﾌﾟｱｯｾﾝ	1	[EXN] INC.1,2
-	539C0-90051		PIPE-ASSY,REAR,RH	ﾘﾔｰﾊﾟｲﾌﾟｱｯｾﾝ	1	[CAKB/EXB][CAKB/EXC] [CAKB/EXE][CAKB/EXK] INC.1,2
-	539C0-90061		PIPE-ASSY,REAR,RH	ﾘﾔｰﾊﾟｲﾌﾟｱｯｾﾝ	1	[CAKB/EXN] INC.1,2
1	NO PART NO.	#	PIPE,REAR,RH	ﾊﾟｲﾌﾟ	1	[EXB][EXC][EXE][EXK]
-	NO PART NO.	#	PIPE,REAR,RH	ﾊﾟｲﾌﾟ	1	[EXN]
-	NO PART NO.	#	PIPE,REAR,RH	ﾊﾟｲﾌﾟ	1	[CAKB/EXB][CAKB/EXC] [CAKB/EXE][CAKB/EXK]
-	NO PART NO.	#	PIPE,REAR,RH	ﾊﾟｲﾌﾟ	1	[CAKB/EXN]
2	514A5-12011		RIVET,POP	ﾘﾍﾞｯﾄ	1	[EXB][EXC][EXE][EXK][EXN]
3	539A2-80221		PIPE,REAR,LH	ﾊﾟｲﾌﾟ	1	[EXB][EXC][EXE][EXK]
-	539A2-60221		PIPE,REAR,LH	ﾊﾟｲﾌﾟ	1	[EXN]
4	524W5-12091		GROMMET	ｸﾞﾛﾒｯﾄ	2	[EXB][EXC][EXE][EXK][EXN]
5	239A5-12401		RUBBER,WEIGHT,RH	ﾗﾊﾞｰ	1	[EXB][EXC][EXE][EXK][EXN]
6	239A5-12411		RUBBER,WEIGHT,LH	ﾗﾊﾞｰ	1	[EXB][EXC][EXE][EXK][EXN]
7	230C1-02041		COVER,AIR-INTAKE	ｶﾊﾞｰ	1	[EXB][EXC][EXE][EXK][EXN]
8	01186-12025		BOLT	ﾎﾞﾙﾄ	4	[EXB][EXC][EXE][EXK][EXN]
9	514T2-72061		WIRE-HARNESS,R-COMBINATION	ﾜｲﾔﾊｰﾈｽ	2	[EXB][EXC][EXE][EXK][EXN]
10	22679-47301		GROMMET	ｸﾞﾛﾒｯﾄ	2	[EXB][EXC][EXE][EXK][EXN]
11	539A2-82251		SEAL,COVER	ｼｰﾙ	1	[EXB][EXC][EXE][EXK][EXN]

FIG.120 REAR PIPE [RW]

(F5H251A0) リヤーパイプ

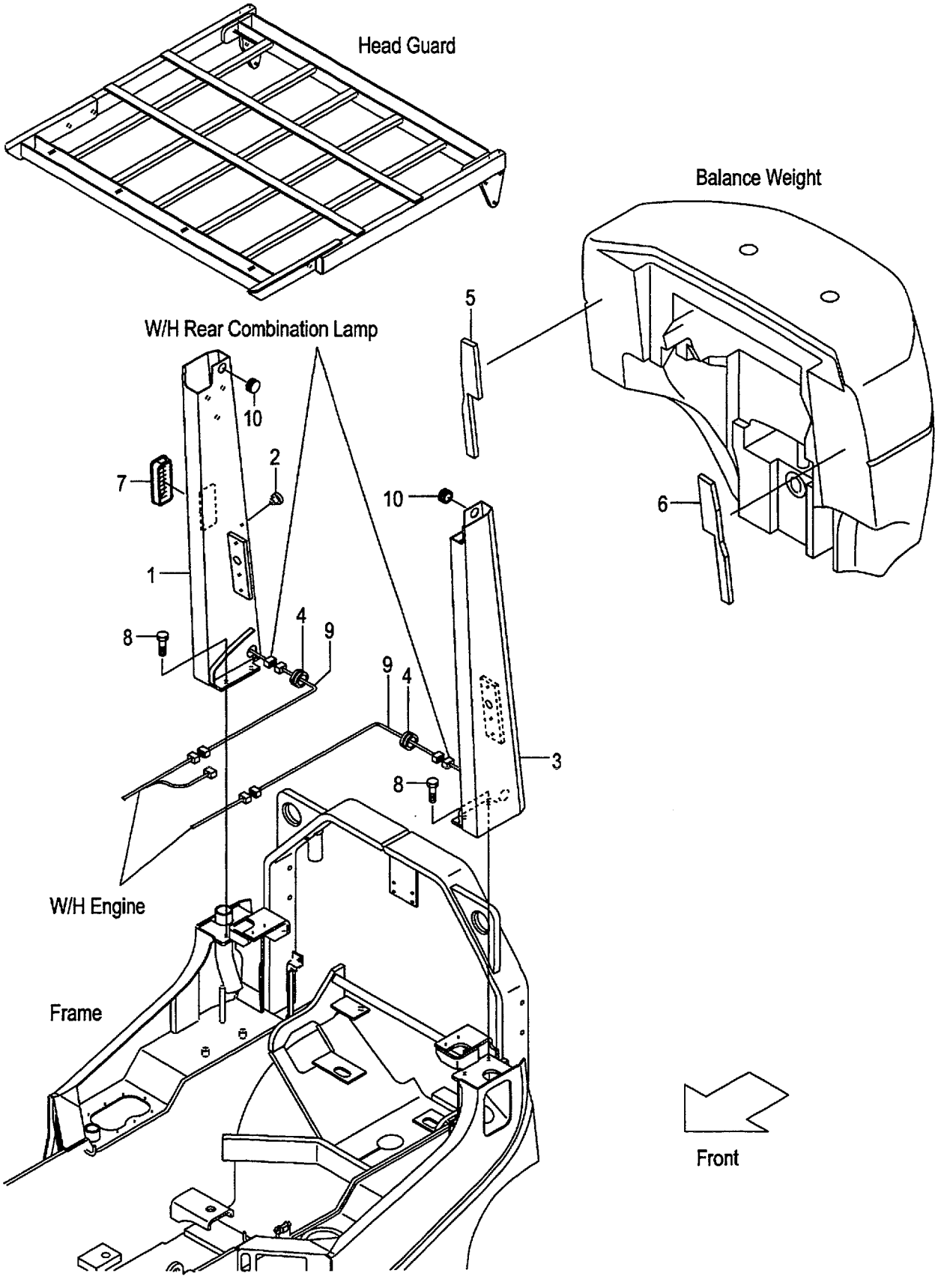

A:FG25C6H FG25T6H FG25W6H
B:FD25C6H FD25T6H FD25W6H

FIG.120
(F5H251A0)

Item No	Part No.	Mark	Description		Req'd	Remarks : Serial No.
A1	539C1-90101		PIPE-ASSY,REAR,RH	ﾘﾔｰﾊﾟｲﾌﾟｱｯｾﾝ	1	[RW] INC.1,2
1	NO PART NO.	#	PIPE,REAR,RH	ﾊﾟｲﾌﾟ	1	[RW]
2	514A5-12011		RIVET,POP	ﾘﾍﾞｯﾄ	1	[RW]
3	539C1-90211		PIPE,REAR,LH	ﾊﾟｲﾌﾟ	1	[RW]
4	524W5-12091		GROMMET	ｸﾞﾛﾒｯﾄ	2	[RW]
5	239A5-12401		RUBBER,WEIGHT,RH	ﾗﾊﾞｰ	1	[RW]
6	239A5-12411		RUBBER,WEIGHT,LH	ﾗﾊﾞｰ	1	[RW]
7	230C1-02041		COVER,AIR-INTAKE	ｶﾊﾞｰ	1	[RW]
8	01186-12025		BOLT	ﾎﾞﾙﾄ	4	[RW]
9	229F2-42141		WIRE-HARNESS,R-COMBINATION	ﾜｲﾔﾊｰﾈｽ	2	[RW]
10	27662-62721		GROMMET	ｸﾞﾛﾒｯﾄ	2	A:15010- B:135- [RW]

FIG.121 FRONT LAMP BRACKET

(F5H25150) フロントランプブラケット

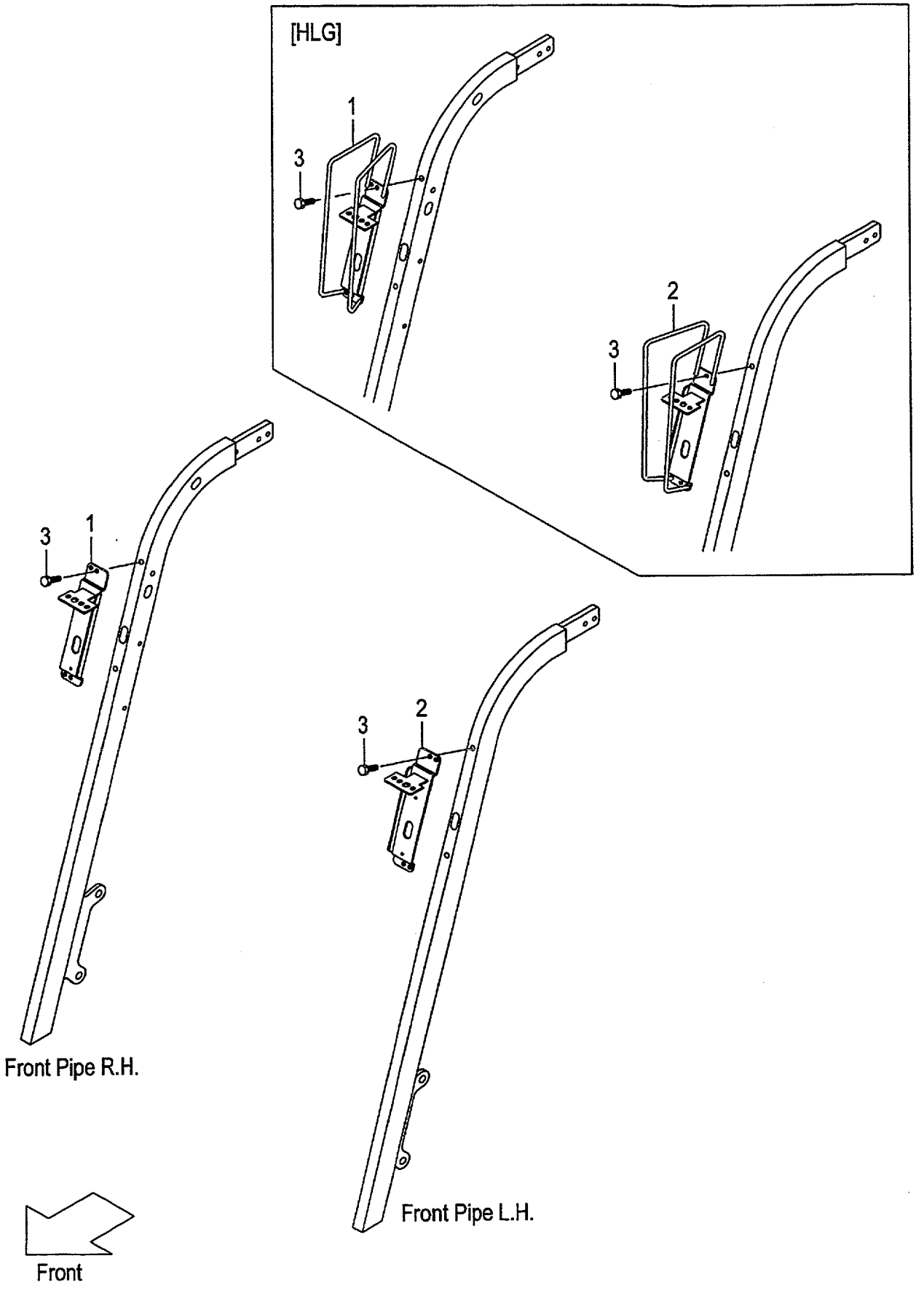

FIG.121
(F5H25150)

A:FG20C6H FG20T6H FG25C6H FG25T6H FG20W6H FG25W6H
B:FD20C6H FD20T6H FD25C6H FD25T6H FD20W6H FD25W6H

Item No	Part No.	Mark	Description	Req'd	Remarks : Serial No.
1	239A5-12501		BRACKET,HEAD-LAMP,RH ﾌﾞﾗｹｯﾄ	1	
-	539A5-12041		BRACKET,HEAD-LAMP,RH ﾌﾞﾗｹｯﾄ	1	[HLG]
2	239A5-12521		BRACKET,HEAD-LAMP,LH ﾌﾞﾗｹｯﾄ	1	
-	539A5-12011		BRACKET,HEAD-LAMP,LH ﾌﾞﾗｹｯﾄ	1	[HLG]
3	01183-08016		BOLT ﾎﾞﾙﾄ	4	

FIG.122 FRONT LAMP BRACKET [HL][BKH]

(F5H251B0) フロントランプブラケット

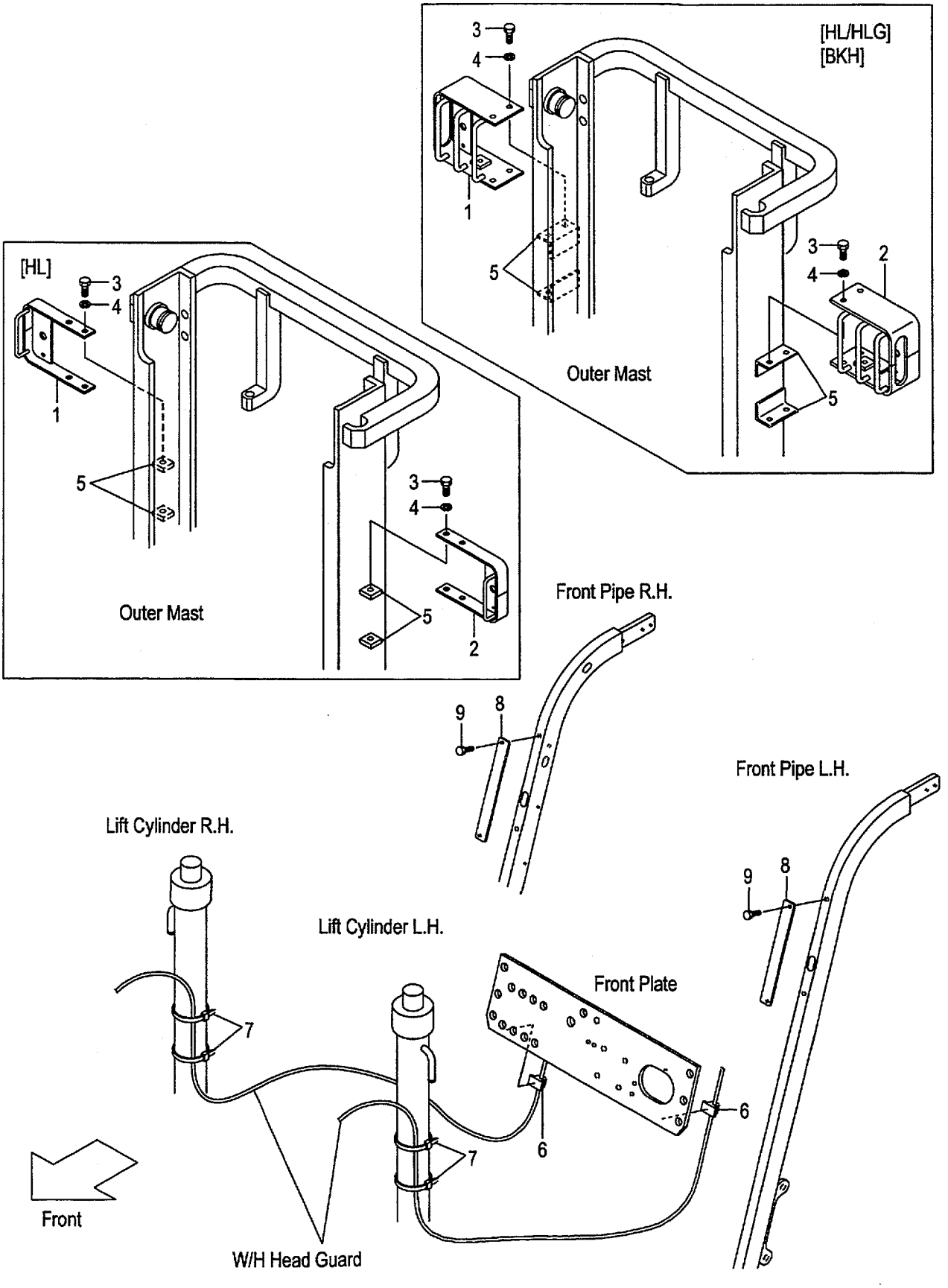

FIG.122
(F5H251B0)

A:FG20C6H FG20T6H FG25C6H FG25T6H FG20W6H FG25W6H
B:FD20C6H FD20T6H FD25C6H FD25T6H FD20W6H FD25W6H

Item No	Part No.	Mark	Description	Req'd	Remarks : Serial No.
1	534A9-22001		BRACKET,HEAD-LAMP,RH ﾌﾞﾗｹｯﾄ	1	[HL]
-	534A4-22001		BRACKET,HEAD-LAMP,RH ﾌﾞﾗｹｯﾄ	1	[HL/HLG][BKH]
2	534A9-22011		BRACKET,HEAD-LAMP,LH ﾌﾞﾗｹｯﾄ	1	[HL]
-	534A4-22011		BRACKET,HEAD-LAMP,LH ﾌﾞﾗｹｯﾄ	1	[HL/HLG][BKH]
3	01100-12020		BOLT ﾎﾞﾙﾄ	4	[HL][HL/HLG][BKH]
4	02010-00012		WASHER ﾜｯｼｬ	4	[HL][HL/HLG][BKH]
5	534A9-22101		PLATE,TAPPED ﾌﾟﾚｰﾄ	4	[HL]
-	534A4-22101		BRACKET ﾌﾞﾗｹｯﾄ	4	[HL/HLG][BKH]
6	27732-42221		CLAMP,HARNESS ｸﾗﾝﾌﾟ	2	[HL][HL/HLG][BKH]
7	04913-11380		BAND,INSHULOCK ﾊﾞﾝﾄﾞ	4	[HL][HL/HLG][BKH]
8	534A9-22301		PLATE ﾌﾟﾚｰﾄ	2	[HL][HL/HLG][BKH]
9	01183-08016		BOLT ﾎﾞﾙﾄ	4	[HL][HL/HLG][BKH]

FIG.123 REAR LAMP BRACKET

(F5H25160) リヤーランプブラケット

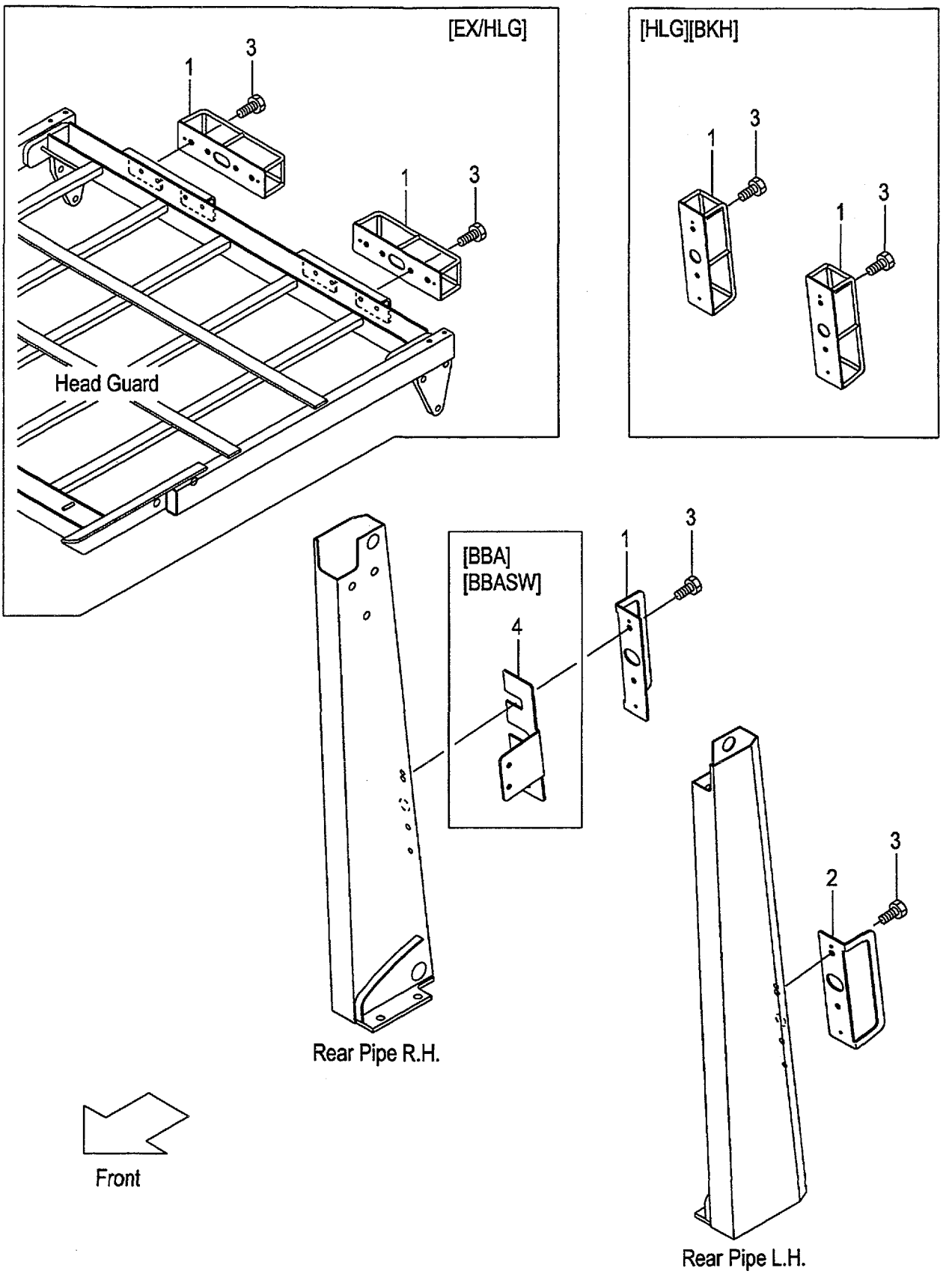

A:FG20C6H FG20T6H FG25C6H FG25T6H C:FD20C6H FD20T6H FD25C6H FD25T6H
B:FG20W6H FG25W6H D:FD20W6H FD25W6H

Item No	Part No.	Mark	Description		Req'd	Remarks : Serial No.
1	534A5-12321		GUARD,REAR-LAMP,RH	ｶﾞｰﾄﾞ	1	(WITHOUT EX)
-	524W5-13351		GUARD,REAR-LAMP	ｶﾞｰﾄﾞ	2	[HLG][BKH]
-	539A5-12101		GUARD,REAR-LAMP	ｶﾞｰﾄﾞ	2	A:15075- C:290- [EX/HLG]
2	534A5-12331		GUARD,REAR-LAMP,LH	ｶﾞｰﾄﾞ	1	(WITHOUT EX,HLG,BKH)
3	01183-08016		BOLT	ﾎﾞﾙﾄ	4	(WITHOUT EX)
-	01183-08016		BOLT	ﾎﾞﾙﾄ	8	A:15075- C:290- [EX/HLG]
4	539A1-32001		BRACKET	ﾌﾞﾗｹｯﾄ	1	[BBA][BBASW]

FIG.124 HEAD GUARD PARTS

(F5H25170) ﾍｯﾄﾞｶﾞｰﾄﾞﾊﾟｰﾂ

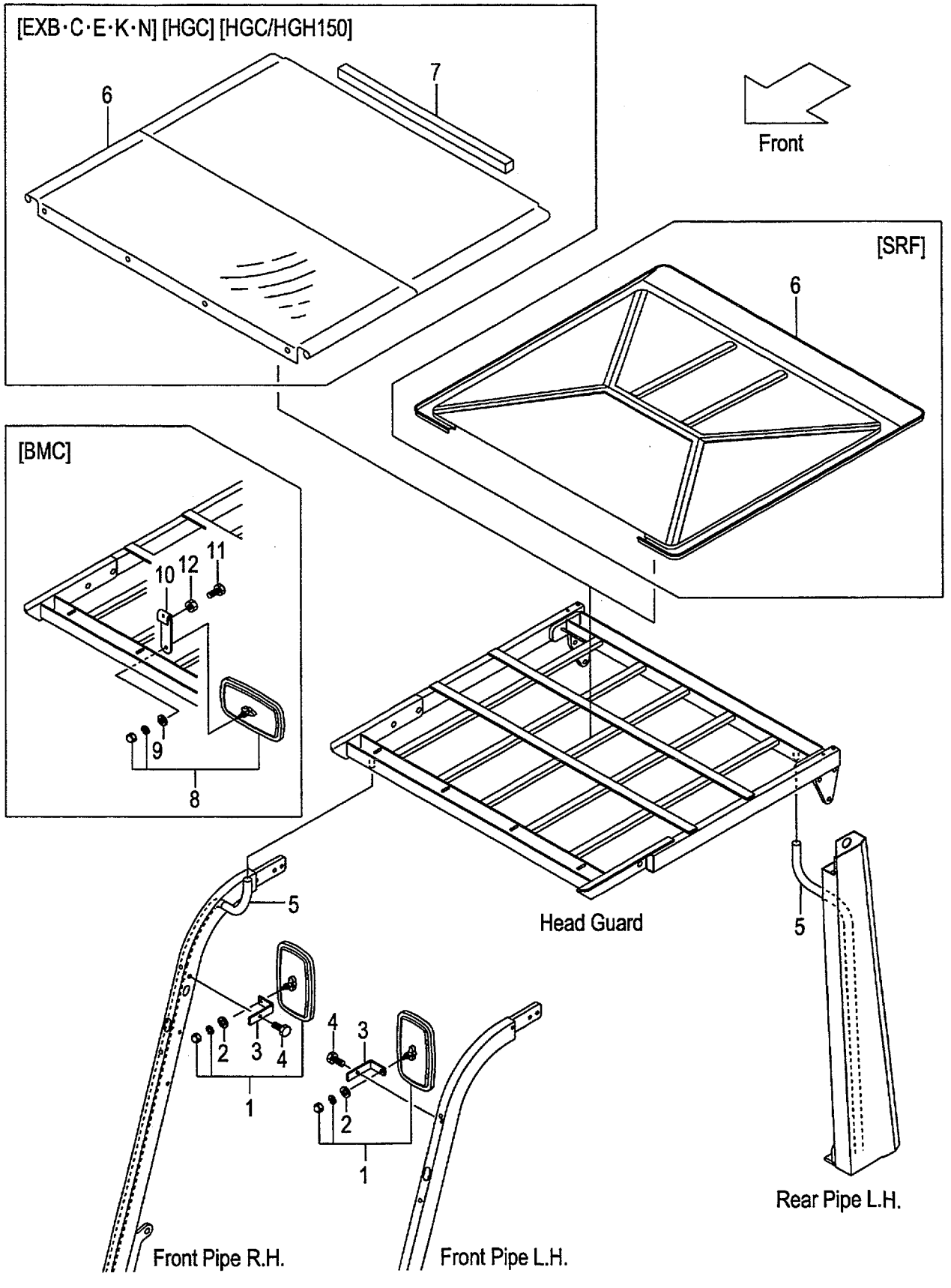

A:FG20C6H FG20T6H FG25C6H FG25T6H C:FD20C6H FD20T6H FD25C6H FD25T6H
B:FG20W6H FG25W6H D:FD20W6H FD25W6H

Item No	Part No.	Mark	Description		Req'd	Remarks : Serial No.
1	239A9-92001		MIRROR	ミラー	2	
2	222A9-32011		WASHER	ワッシャ	2	
3	534A5-12571		BRACKET,BACK-MIRROR	ブラケット	2	
4	514A5-12021		BOLT	ボルト	2	
5	534A5-00401		HOSE,VINYL	ホース	2	
-	516M5-12311		HOSE,VINYL	ホース	2	A,C
						[EXN]
-	516G5-12511		HOSE,VINYL	ホース	2	[HGL]
-	516M5-12311		HOSE,VINYL	ホース	2	[HGH060]
-	534A5-00411		HOSE,VINYL	ホース	2	[HGH150]
6	539A5-12001		CANVAS	キャンバス	1	A,C
						[EXB][EXC][EXE][EXK][EXN]
						(WITHOUT HGCZZZ/EX)
-	539A5-10501		ROOF,SUN	ルーフ	1	[SRF]
-	539A5-12001		CANVAS	キャンバス	1	[HGC]
-	539A5-00261		CANVAS	キャンバス	1	[HGC/HGH150]
7	516G5-13511		SUPPORTER	サポータ	1	A,C
						[EXB][EXC][EXE][EXK][EXN]
						(WITHOUT HGCZZZ/EX)
-	516G5-13511		SUPPORTER	サポータ	1	[HGC][HGC/HGH150]
8	239A9-92001		MIRROR	ミラー	1	[BMC]
9	222A9-32011		WASHER	ワッシャ	1	[BMC]
10	539A9-32001		BRACKET,BACK-MIRROR	ブラケット	1	[BMC]
11	01100-08025		BOLT	ボルト	2	[BMC]
12	01402-00008		NUT	ナット	2	[BMC]

FIG.125 ACCEL PEDAL (GASOLINE)

(F5H25210) アクセルペダル

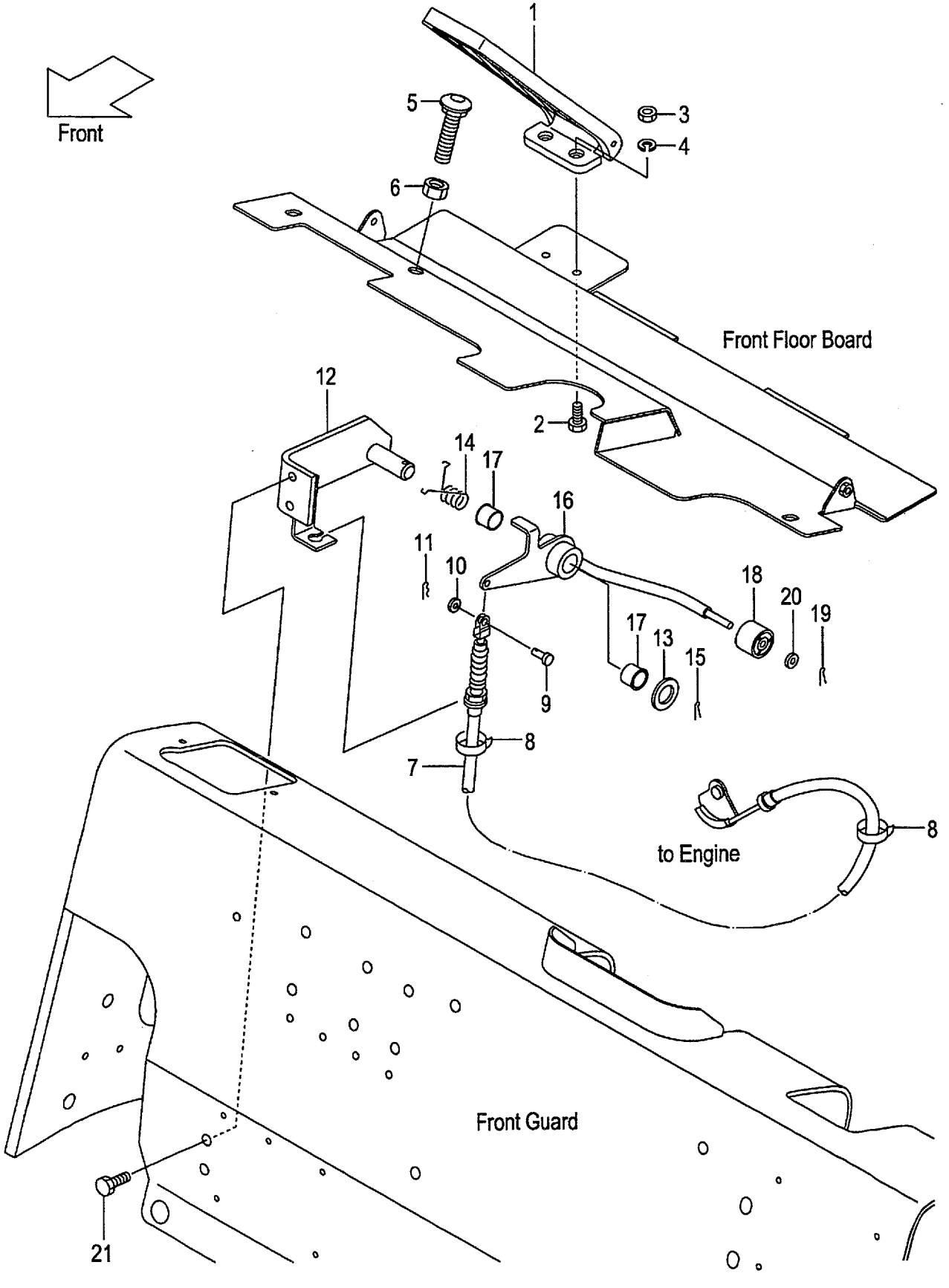

A:FG20C6H FG20T6H FG25C6H FG25T6H FG20W6H FG25W6H

Item No	Part No.	Mark	Description		Req'd	Remarks : Serial No.
1	214A5-22051		PEDAL,ACCEL	ﾍﾟﾀﾞﾙ	1	
2	01100-06012		BOLT	ﾎﾞﾙﾄ	2	
3	01400-00006		NUT	ﾅｯﾄ	2	
4	02010-00006		WASHER	ﾜｯｼｬ	2	
5	27455-22011		BOLT,CAP-SQUARE-NECK	ﾎﾞﾙﾄ	1	
6	01400-00012		NUT	ﾅｯﾄ	1	
7	237A5-22101		WIRE,ACCEL	ﾜｲﾔ	1	
8	27042-42312		BAND,CABLE	ﾊﾞﾝﾄﾞ	2	
9	02262-06015		PIN,CLEVIS	ﾋﾟﾝ	1	
10	02000-00006		WASHER	ﾜｯｼｬ	1	
11	216G5-22081		PIN,SNAP	ﾋﾟﾝ	1	
12	239A5-20402		BRACKET,ACCEL-LINK	ﾌﾞﾗｹｯﾄ	1	
13	02000-00016		WASHER	ﾜｯｼｬ	1	
14	239A5-22252		SPRING	ｽﾌﾟﾘﾝｸﾞ	1	
15	02200-04025		PIN,COTTER	ﾋﾟﾝ	1	
A1	239A5-20302		LINK-ASSY,ACCEL	ｱｸｾﾙﾘﾝｸｱｯｾﾝ	1	INC.16-20
16	NO PART NO.	#	LINK,ACCEL	ﾘﾝｸ	1	
17	214A7-42071		BUSHING	ﾌﾞｯｼﾝｸﾞ	2	
18	214A5-22001		ROLLER	ﾛｰﾗ	1	
19	02200-16010		PIN,COTTER	ﾋﾟﾝ	1	
20	02000-00006		WASHER	ﾜｯｼｬ	1	
21	01183-08016		BOLT	ﾎﾞﾙﾄ	2	

FIG.126 ACCEL PEDAL (DIESEL)

(F5H25220) アクセルペダル

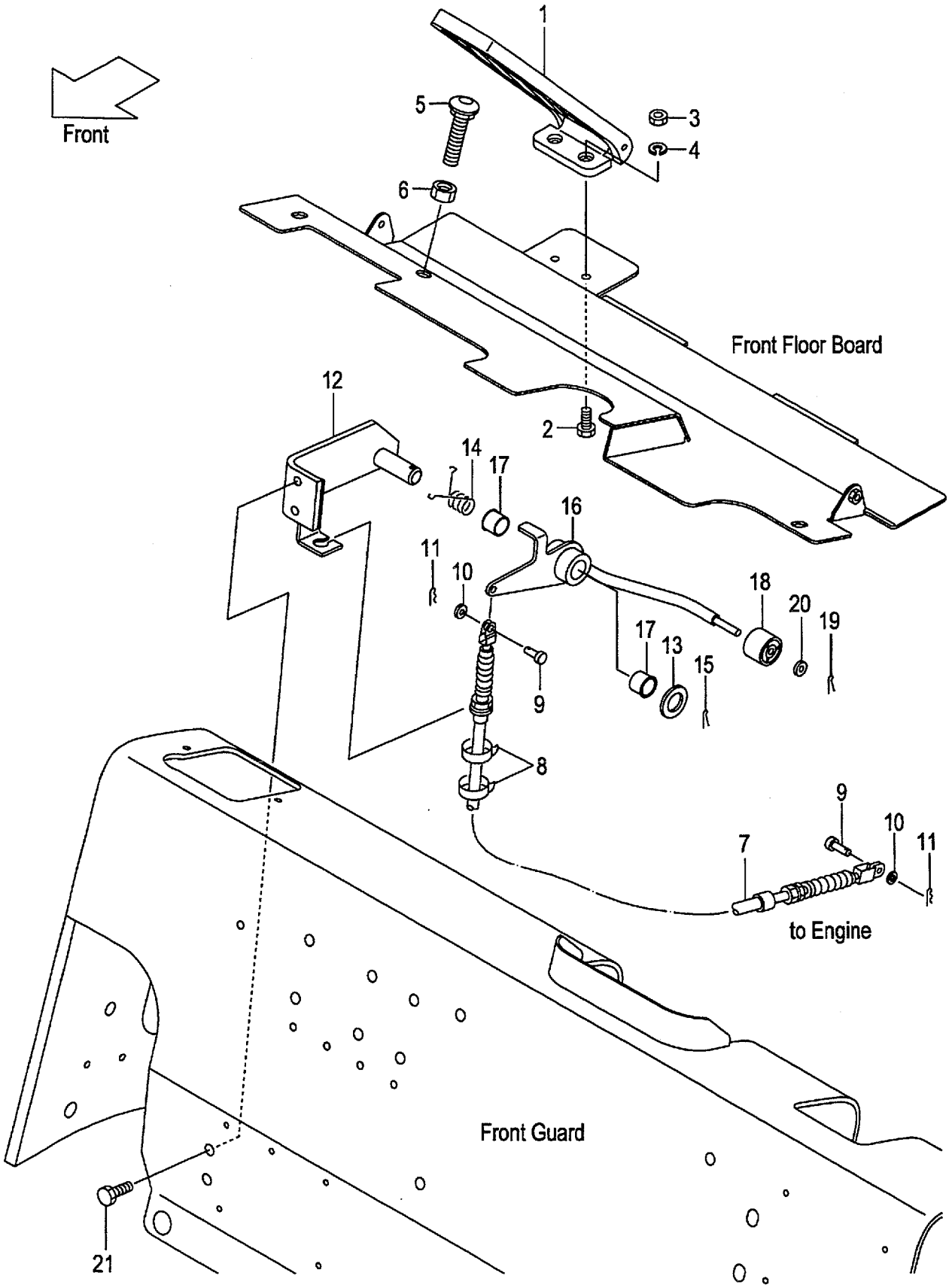

A:FD20C6H FD20T6H FD25C6H FD25T6H FD20W6H FD25W6H

Item No	Part No.	Mark	Description		Req'd	Remarks : Serial No.
1	214A5-22051		PEDAL,ACCEL	ﾍﾟﾀﾞﾙ	1	
2	01100-06012		BOLT	ﾎﾞﾙﾄ	2	
3	01400-00006		NUT	ﾅｯﾄ	2	
4	02010-00006		WASHER	ﾜｯｼｬ	2	
5	216G5-22101		BOLT,CAP-SQUARE-NECK	ﾎﾞﾙﾄ	1	
6	01400-00012		NUT	ﾅｯﾄ	1	
7	239A5-22101		WIRE,ACCEL	ﾜｲﾔ	1	
8	27042-42312		BAND,CABLE	ﾊﾞﾝﾄﾞ	2	
9	02262-06015		PIN,CLEVIS	ﾋﾟﾝ	2	
10	02000-00006		WASHER	ﾜｯｼｬ	2	
11	216G5-22081		PIN,SNAP	ﾋﾟﾝ	2	
12	239A5-20402		BRACKET,ACCEL-LINK	ﾌﾞﾗｹｯﾄ	1	
13	02000-00016		WASHER	ﾜｯｼｬ	1	
14	239A5-22252		SPRING	ｽﾌﾟﾘﾝｸﾞ	1	
15	02200-04025		PIN,COTTER	ﾋﾟﾝ	1	
A1	239A5-20302		LINK-ASSY,ACCEL	ｱｸｾﾙﾘﾝｸｱｯｾﾝ	1	INC.16-20
16	NO PART NO.	#	LINK,ACCEL	ﾘﾝｸ	1	
17	214A7-42071		BUSHING	ﾌﾞｯｼﾝｸﾞ	2	
18	214A5-22001		ROLLER	ﾛｰﾗ	1	
19	02200-16010		PIN,COTTER	ﾋﾟﾝ	1	
20	02000-00006		WASHER	ﾜｯｼｬ	1	
21	01183-08016		BOLT	ﾎﾞﾙﾄ	2	

FIG.127 FOOT PEDAL (CLUTCH)

(F5H25410) ﾌｯﾄﾍﾟﾀﾞﾙ

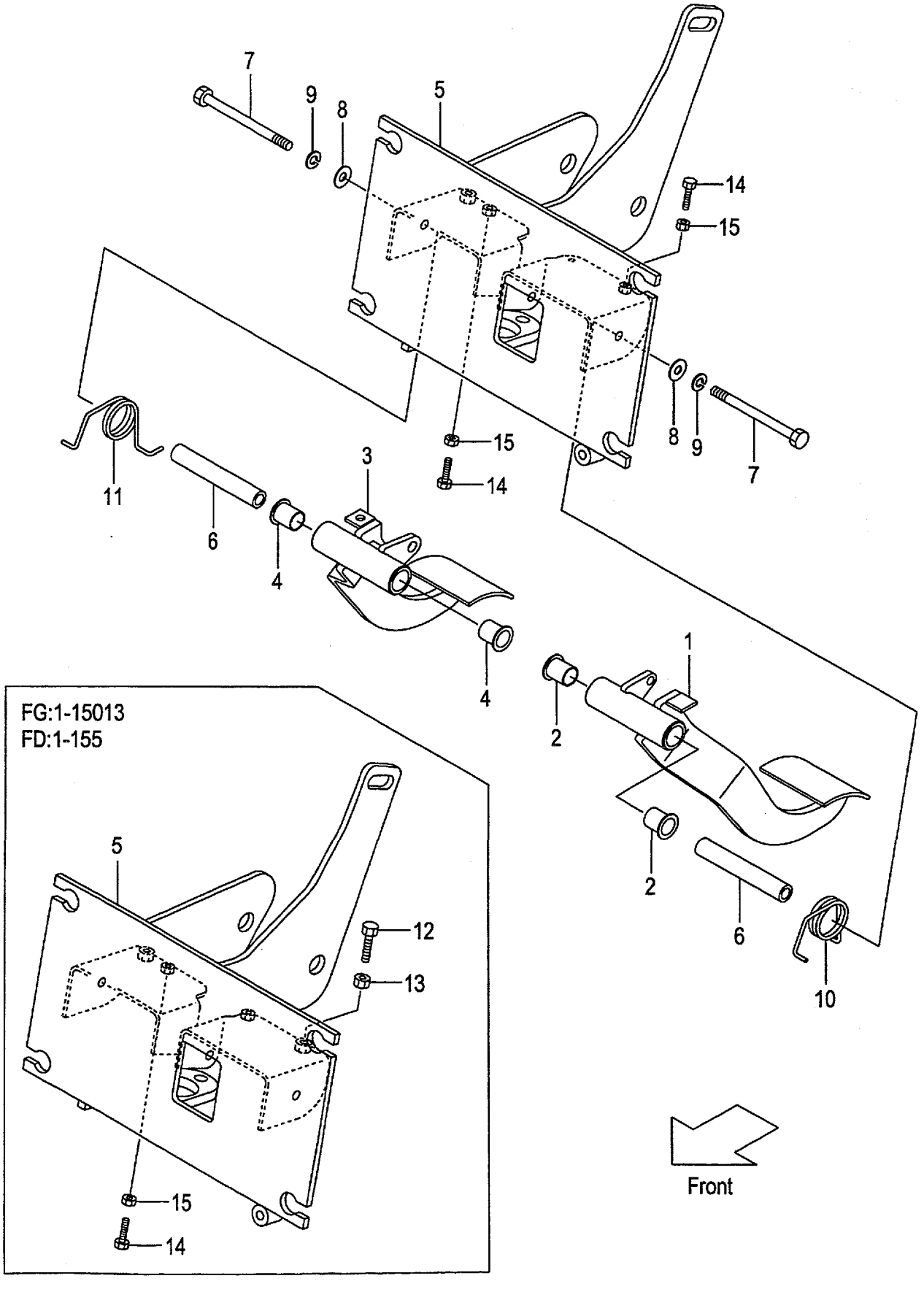

A:FG20C6H FG25C6H
B:FD20C6H FD25C6H

FIG.127
(F5H25410)

Item No	Part No.	Mark	Description		Req'd	Remarks : Serial No.
A1	239A5-40071		PEDAL-ASSY,CLUTCH	ｸﾗｯﾁﾍﾟﾀﾞﾙｱｯｾﾝ	1	INC.1,2
1	NO PART NO.	#	PEDAL,CLUTCH	ﾍﾟﾀﾞﾙ	1	
2	239B5-42221		BUSHING	ﾌﾞｯｼﾝｸﾞ	2	
A2	239A5-40061		PEDAL-ASSY,BRAKE	ﾌﾞﾚｰｷﾍﾟﾀﾞﾙｱｯｾﾝ	1	INC.3,4
3	NO PART NO.	#	PEDAL,BRAKE	ﾍﾟﾀﾞﾙ	1	
4	239B5-42221		BUSHING	ﾌﾞｯｼﾝｸﾞ	2	
5	239A5-40201		BRACKET,PEDAL	ﾌﾞﾗｹｯﾄ	1	
6	239B5-42231		SPACER	ｽﾍﾟｰｻ	2	
7	01103-10120		BOLT	ﾎﾞﾙﾄ	2	
8	02002-00010		WASHER	ﾜｯｼｬ	2	
9	02011-00010		WASHER	ﾜｯｼｬ	2	
10	239B5-42201		SPRING	ｽﾌﾟﾘﾝｸﾞ	1	
11	239B5-42211		SPRING	ｽﾌﾟﾘﾝｸﾞ	1	
12	01120-10035		BOLT	ﾎﾞﾙﾄ	1	A:1-15013 B:1-155
13	01402-00010		NUT	ﾅｯﾄ	1	A:1-15013 B:1-155
14	01120-08035		BOLT	ﾎﾞﾙﾄ	1	A:1-15013 B:1-155
-	01120-08035		BOLT	ﾎﾞﾙﾄ	2	A:15014- B:156-
15	01402-00008		NUT	ﾅｯﾄ	1	A:1-15013 B:1-155
-	01402-00008		NUT	ﾅｯﾄ	2	A:15014- B:156-

FIG.128 FOOT PEDAL (CLUTCH):[PC]

(F5H25450) ﾌｯﾄﾍﾟﾀﾞﾙ

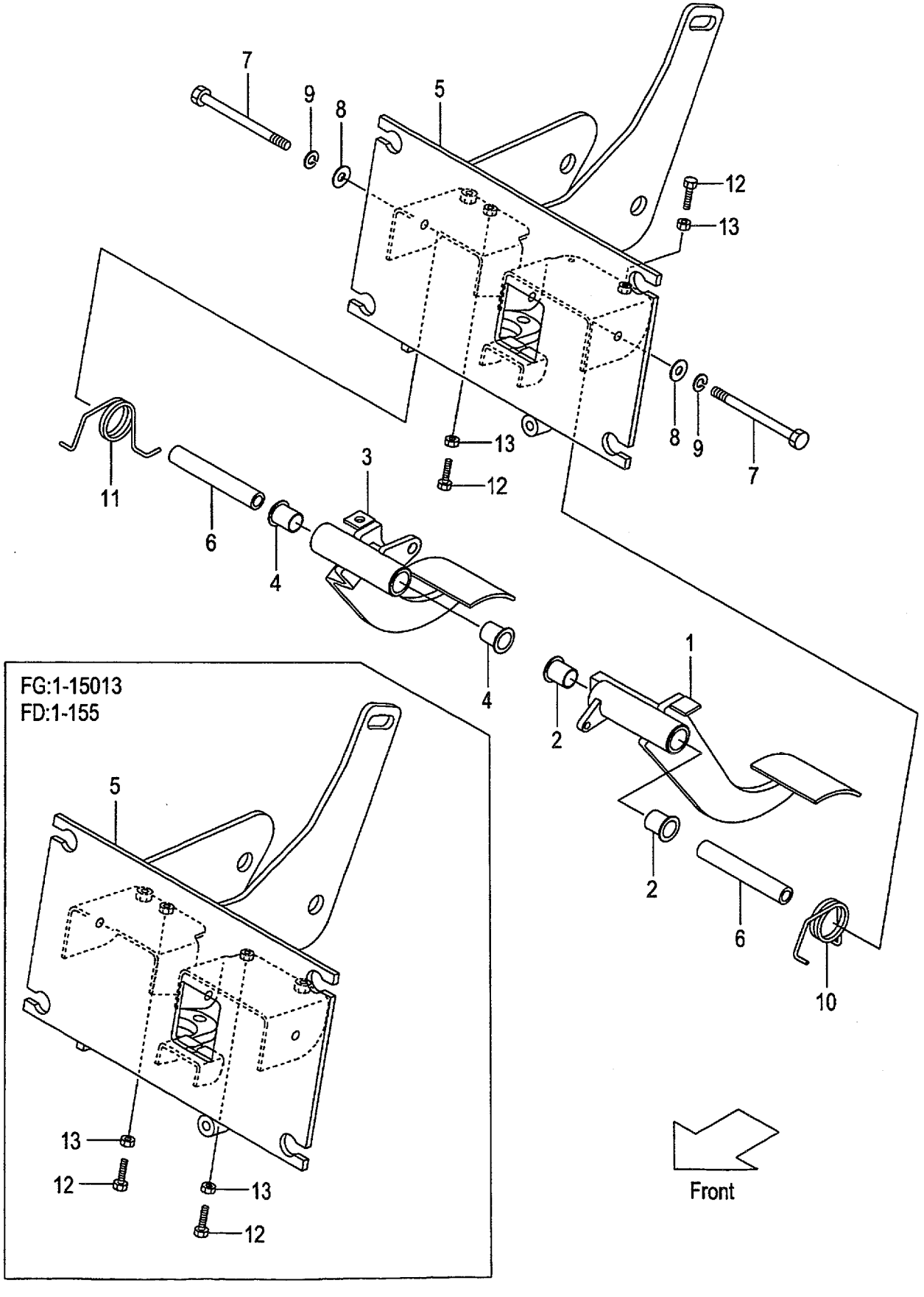

A:FG20C6H FG25C6H
B:FD20C6H FD25C6H

FIG.128
(F5H25450)

Item No	Part No.	Mark	Description		Req'd	Remarks : Serial No.
A1	239H5-40411		PEDAL-ASSY,INCHING	ｲﾝﾁﾝｸﾞﾍﾟﾀﾞﾙｱｯｾﾝ	1	[PC] INC.1,2
1	NO PART NO.	#	PEDAL,INCHING	ﾍﾟﾀﾞﾙ	1	[PC]
2	239B5-42221		BUSHING	ﾌﾞｯｼﾝｸﾞ	2	[PC]
A2	239A5-40061		PEDAL-ASSY,BRAKE	ﾌﾞﾚｰｷﾍﾟﾀﾞﾙｱｯｾﾝ	1	[PC] INC.3,4
3	NO PART NO.	#	PEDAL,BRAKE	ﾍﾟﾀﾞﾙ	1	[PC]
4	239B5-42221		BUSHING	ﾌﾞｯｼﾝｸﾞ	2	[PC]
5	239H5-40221		BRACKET,PEDAL	ﾌﾞﾗｹｯﾄ	1	[PC]
6	239B5-42231		SPACER	ｽﾍﾟｰｻ	2	[PC]
7	01103-10120		BOLT	ﾎﾞﾙﾄ	2	[PC]
8	02002-00010		WASHER	ﾜｯｼｬ	2	[PC]
9	02011-00010		WASHER	ﾜｯｼｬ	2	[PC]
10	239B5-42201		SPRING	ｽﾌﾟﾘﾝｸﾞ	1	[PC]
11	239B5-42211		SPRING	ｽﾌﾟﾘﾝｸﾞ	1	[PC]
12	01120-08035		BOLT	ﾎﾞﾙﾄ	2	[PC]
13	01402-00008		NUT	ﾅｯﾄ	2	[PC]

FIG.129 FOOT PEDAL (TOR-CON)

(F5H254A0) ﾌｯﾄﾍﾟﾀﾞﾙ

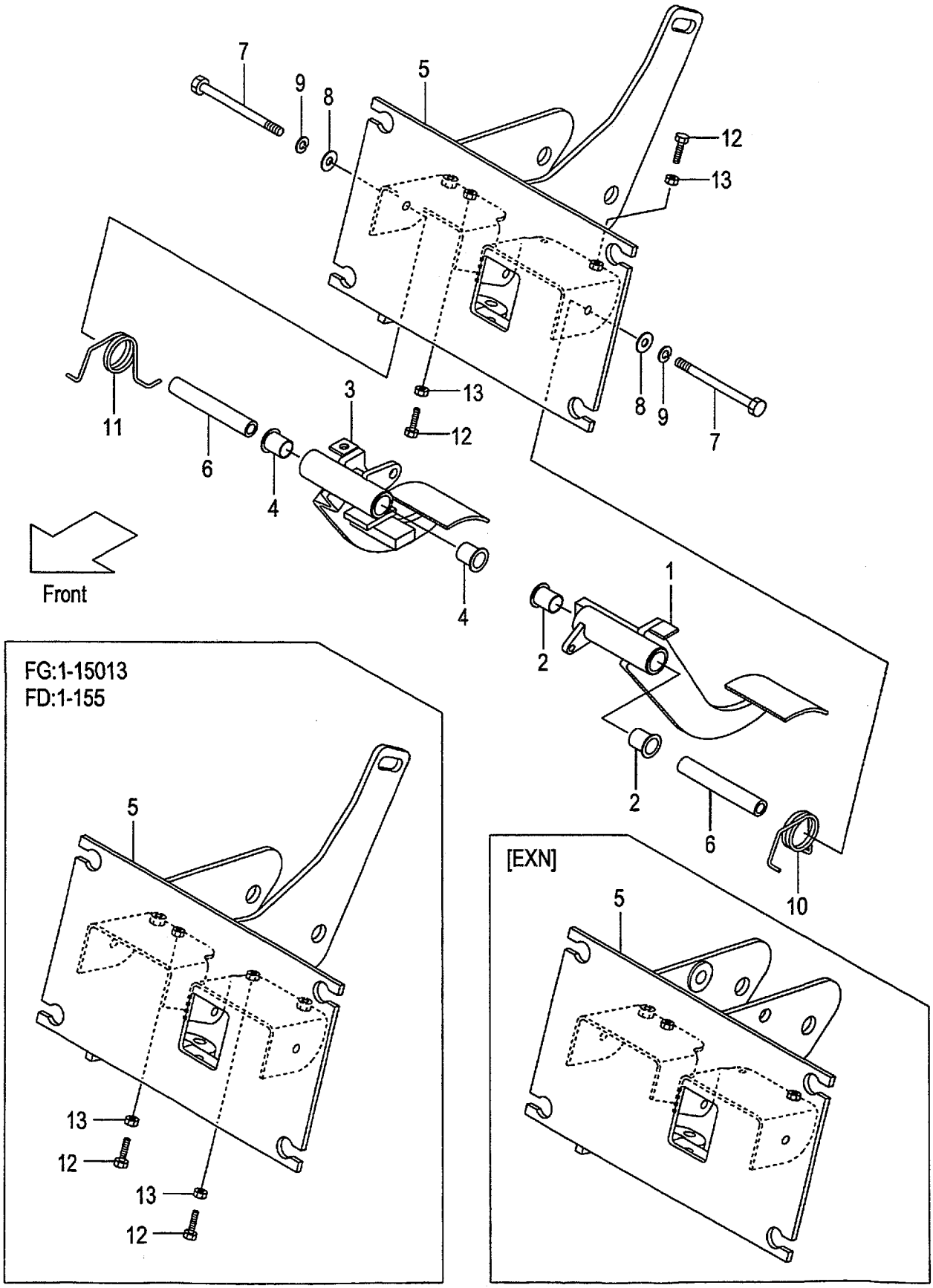

A:FG20T6H FG25T6H
B:FD20T6H FD25T6H

FIG.129
(F5H254A0)

Item No	Part No.	Mark	Description		Req'd	Remarks : Serial No.
A1	239B5-40031		PEDAL-ASSY,INCHING	ｲﾝﾁﾝｸﾞﾍﾟﾀﾞﾙｱｯｾﾝ	1	INC.1,2
1	NO PART NO.	#	PEDAL,INCHING	ﾍﾟﾀﾞﾙ	1	
2	239B5-42221		BUSHING	ﾌﾞｯｼﾝｸﾞ	2	
A2	239B5-40021		PEDAL-ASSY,BRAKE	ﾌﾞﾚｰｷﾍﾟﾀﾞﾙｱｯｾﾝ	1	INC.3,4
3	NO PART NO.	#	PEDAL,BRAKE	ﾍﾟﾀﾞﾙ	1	
4	239B5-42221		BUSHING	ﾌﾞｯｼﾝｸﾞ	2	
5	239B5-40201		BRACKET,PEDAL	ﾌﾞﾗｹｯﾄ	1	
-	539B2-60201		BRACKET,PEDAL	ﾌﾞﾗｹｯﾄ	1	[EXN]
6	239B5-42231		SPACER	ｽﾍﾟｰｻ	2	
7	01103-10120		BOLT	ﾎﾞﾙﾄ	2	
8	02002-00010		WASHER	ﾜｯｼｬ	2	
9	02011-00010		WASHER	ﾜｯｼｬ	2	
10	239B5-42201		SPRING	ｽﾌﾟﾘﾝｸﾞ	1	
11	239B5-42211		SPRING	ｽﾌﾟﾘﾝｸﾞ	1	
12	01120-08035		BOLT	ﾎﾞﾙﾄ	2	
13	01402-00008		NUT	ﾅｯﾄ	2	

FIG.130 FOOT PEDAL (OIL CLUTCH)

(F5H254C0) ﾌｯﾄﾍﾟﾀﾞﾙ

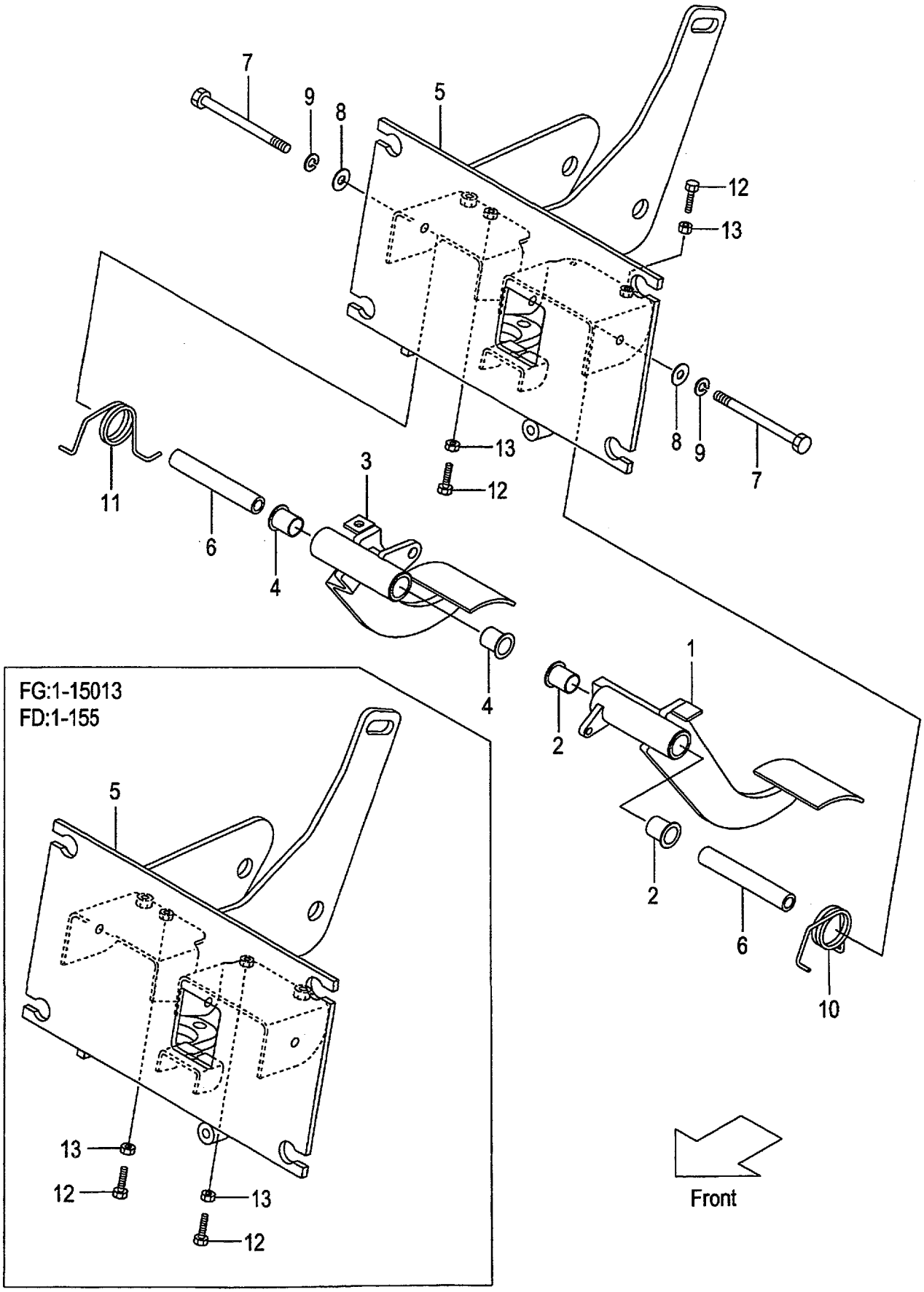

A:FG20W6H FG25W6H
B:FD20W6H FD25W6H

FIG.130
(F5H254C0)

Item No	Part No.	Mark	Description		Req'd	Remarks : Serial No.
A1	239H5-40411		PEDAL-ASSY,INCHING	ｲﾝﾁﾝｸﾞﾍﾟﾀﾞﾙｱｯｾﾝ	1	INC.1,2
1	NO PART NO.	#	PEDAL,INCHING	ﾍﾟﾀﾞﾙ	1	
2	239B5-42221		BUSHING	ﾌﾞｯｼﾝｸﾞ	2	
A2	239A5-40061		PEDAL-ASSY,BRAKE	ﾌﾞﾚｰｷﾍﾟﾀﾞﾙｱｯｾﾝ	1	INC.3,4
3	NO PART NO.	#	PEDAL,BRAKE	ﾍﾟﾀﾞﾙ	1	
4	239B5-42221		BUSHING	ﾌﾞｯｼﾝｸﾞ	2	
5	239H5-40221		BRACKET,PEDAL	ﾌﾞﾗｹｯﾄ	1	
6	239B5-42231		SPACER	ｽﾍﾟｰｻ	2	
7	01103-10120		BOLT	ﾎﾞﾙﾄ	2	
8	02002-00010		WASHER	ﾜｯｼｬ	2	
9	02011-00010		WASHER	ﾜｯｼｬ	2	
10	239B5-42201		SPRING	ｽﾌﾟﾘﾝｸﾞ	1	
11	239B5-42211		SPRING	ｽﾌﾟﾘﾝｸﾞ	1	
12	01120-08035		BOLT	ﾎﾞﾙﾄ	2	
13	01402-00008		NUT	ﾅｯﾄ	2	

FIG.131 FOOT PEDAL CYLINDER (CLUTCH)

(F5H25420) ﾌｯﾄﾍﾟﾀﾞﾙｼﾘﾝﾀﾞ

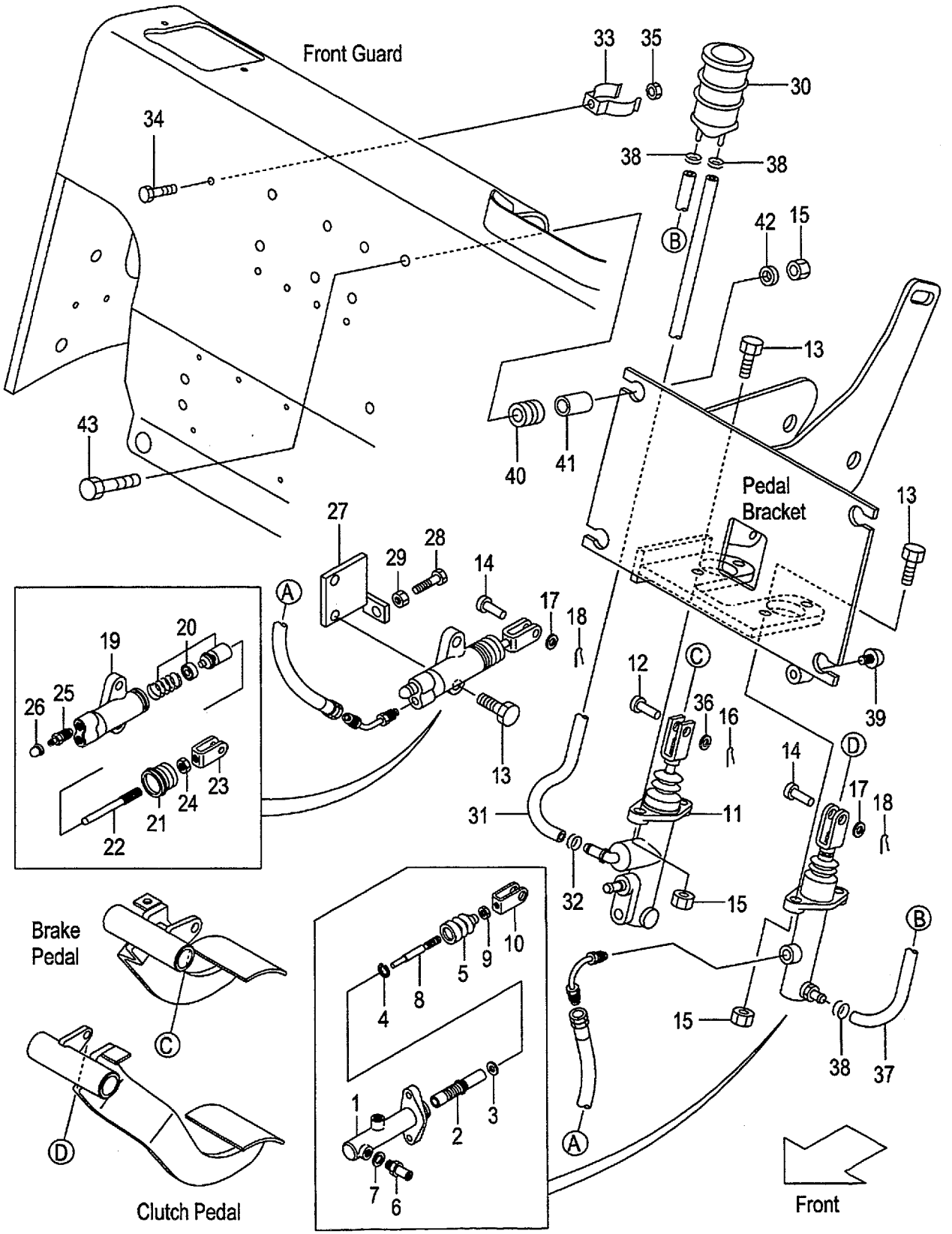

A:FG20C6H FG25C6H
B:FD20C6H FD25C6H

FIG.131
(F5H25420)

Item No	Part No.	Mark	Description		Req'd	Remarks : Serial No.
A1	239A5-40501		CYL-ASSY,CLUTCH-MASTER		1	INC.1-10
				クラッチマスタシリンダアッセン		
1	NO PART NO.	#	BODY,CYL	ボディ	1	
2	NO PART NO.	#*	PISTON	ピストン	1	
3	216G5-32311	*	PLATE,PISTON-STOPPER	プレート	1	
4	25595-42311	*	RING,SNAP	スナップリング	1	
5	216G5-32321	*	BOOT	ブーツ	1	
6	216G5-32331		UNION	ユニオン	1	
7	216G5-32341		GASKET	ガスケット	1	
8	NO PART NO.	#	ROD,PUSH	ロッド	1	
9	01402-00008		NUT	ナット	1	
10	25595-42452		CLEVIS	クレビス	1	
11	239A5-40101		CYL,BRAKE-MASTER	シリンダ	1	A:1-15023 B:1-189 SEE FIG.140
-	239A5-40102		CYL,BRAKE-MASTER	シリンダ	1	A:15024- B:190- SEE FIG.140A
12	02262-10030		PIN,CLEVIS	ピン	1	
13	01184-10030		BOLT	ボルト	6	
14	02262-08025		PIN,CLEVIS	ピン	2	
15	01400-00010		NUT	ナット	8	
16	02200-32025		PIN,COTTER	ピン	1	
17	02000-00008		WASHER	ワッシャ	2	
18	02200-02020		PIN,COTTER	ピン	2	
A2	214A5-32312		CYL-ASSY,CLUTCH-RELEASE		1	INC.19-26
				クラッチリリースシリンダアッセン		
19	NO PART NO.	#	BODY,CYL	ボディ	1	
20	NO PART NO.	#*	PISTON	ピストン	1	
21	NO PART NO.	#*	BOOT	ブーツ	1	
A3	214A5-33052		ROD-ASSY,PUSH	プッシュロッドアッセン	1	INC.22-24
22	214A5-33062		ROD,PUSH	ロッド	1	
23	25595-42452		CLEVIS	クレビス	1	
24	01402-00008		NUT	ナット	1	
25	214A5-33031		VALVE,BLEEDER	バルブ	1	
26	214A5-33041		CAP,BLEEDER	キャップ	1	
27	214A5-32101		BRACKET,RELEASE-CYL	ブラケット	1	
28	01100-10030		BOLT	ボルト	1	
29	01402-00010		NUT	ナット	1	
30	216G5-42011		TANK,RESERVE	タンク	1	
31	239A5-42411		HOSE,RESERVE	ホース	1	
32	25595-42491		CLIP,HOSE	クリップ	1	
33	224G5-42061		CLIP,RESERVE-TANK	クリップ	1	
34	239A5-42381		BOLT	ボルト	1	
35	01400-00006		NUT	ナット	1	
36	02000-00010		WASHER	ワッシャ	1	
37	239A5-42401		HOSE,RESERVE	ホース	1	
38	25785-43091		CLIP,HOSE	クリップ	3	
39	23456-42181		STOPPER	ストッパ	1	
40	216G6-42031		RUBBER,MOUNT	ラバー	4	

FIG.131 FOOT PEDAL CYLINDER (CLUTCH)

(F5H25420) ﾌｯﾄﾍﾟﾀﾞﾙｼﾘﾝﾀﾞ

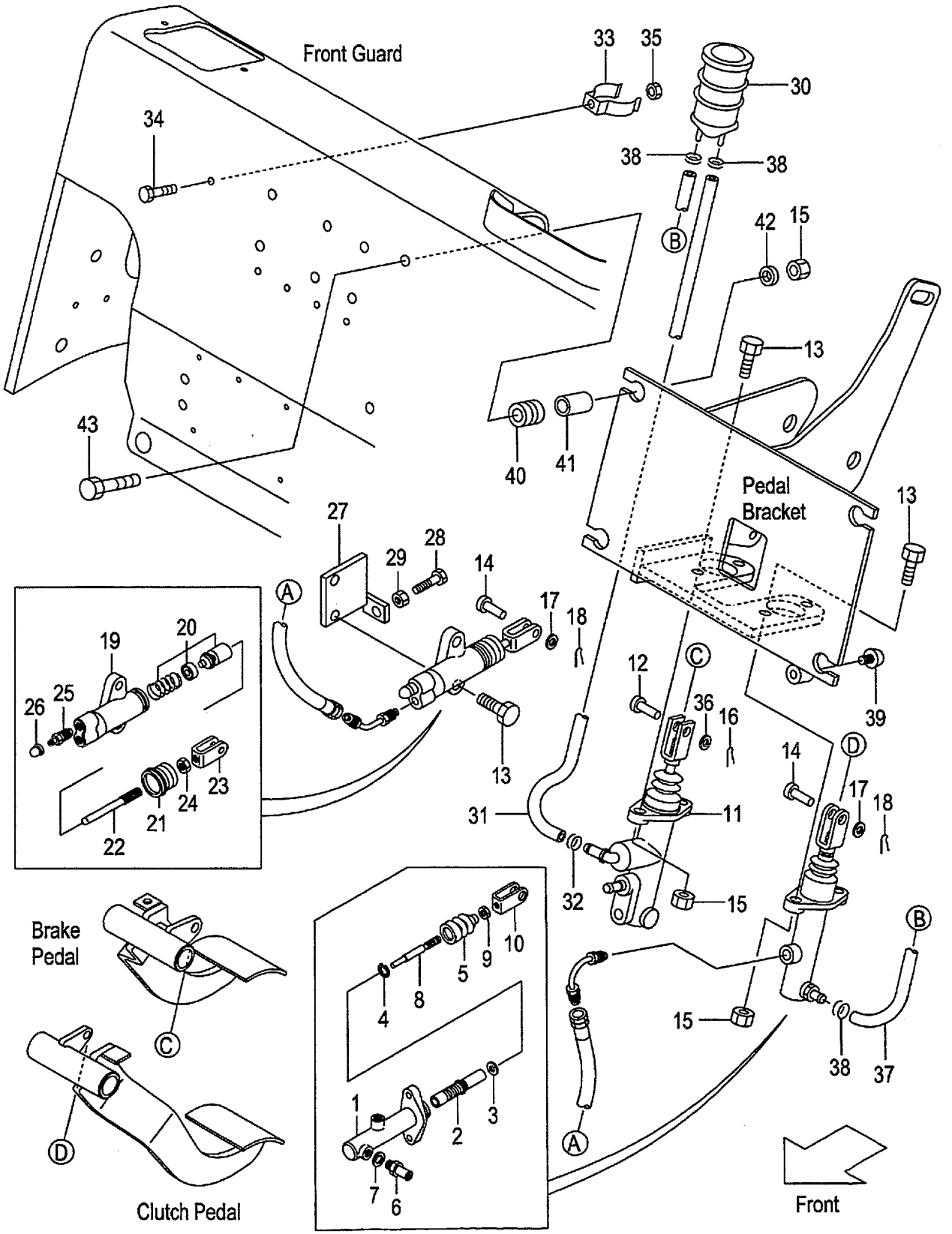

A:FG20C6H FG25C6H
B:FD20C6H FD25C6H

Item No	Part No.	Mark	Description		Req'd	Remarks : Serial No.
41	239B5-42721		COLLAR	カラー	4	
42	22252-32251		WASHER	ワッシャ	4	
43	216G6-43241		BOLT	ボルト	4	
K1	216G5-32201		KIT,REPAIR	リペアキット	1	INC.2-5
K2	214A5-33012		KIT,REPAIR	リペアキット	1	INC.20,21

FIG.132 FOOT PEDAL CYLINDER (CLUTCH):[PC]

(F5H25460) ﾌｯﾄﾍﾟﾀﾞﾙｼﾘﾝﾀﾞ

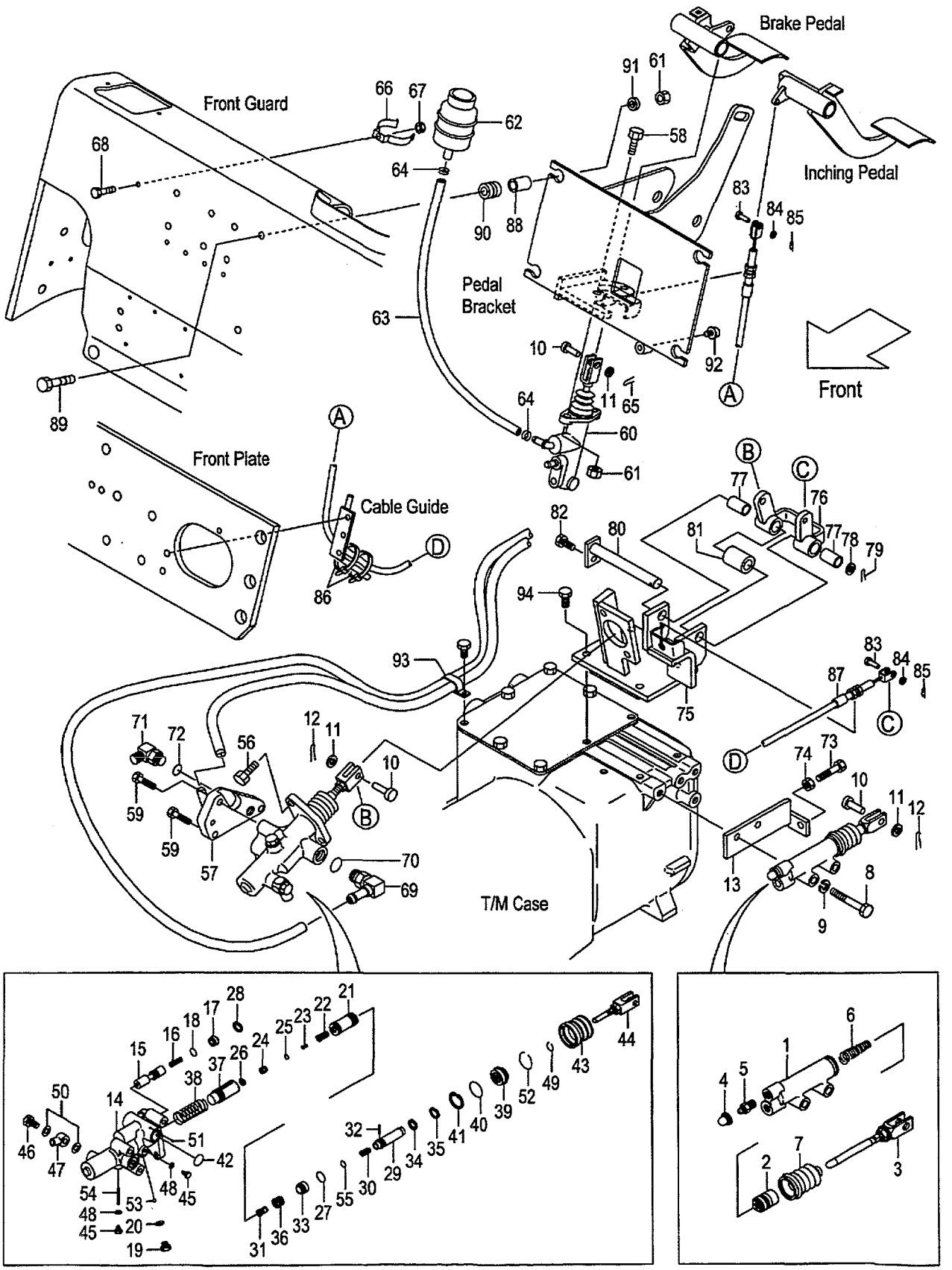

A:FG20C6H FG25C6H
B:FD20C6H FD25C6H

FIG.132
(F5H25460)

Item No	Part No.	Mark	Description		Req'd	Remarks : Serial No.
A1	522A2-10401		CYL-ASSY,CLUTCH-RELEASE	クラッチリリースシリンダアッセン	1	[PC] INC.1-7
1	NO PART NO.	#	BODY,CYL	ボディ	1	[PC]
2	522A2-18541	*	PISTON,RELEASE-CYL	ピストン	1	[PC]
3	522A2-18551		ROD,PUSH	ロッド	1	[PC]
4	522A2-18561	*	CAP,BLEEDER-PLUG	キャップ	1	[PC]
5	522A2-18571		PLUG,BLEEDER	プラグ	1	[PC]
6	522A2-18581	*	SPRING,CONICAL	スプリング	1	[PC]
7	522A2-18591	*	BOOT	ブーツ	1	[PC]
8	01103-10060		BOLT	ボルト	2	[PC]
9	02010-00010		WASHER	ワッシャ	2	[PC]
10	02262-10030		PIN,CLEVIS	ピン	3	[PC]
11	02000-00010		WASHER	ワッシャ	3	[PC]
12	02200-32020		PIN,COTTER	ピン	2	[PC]
13	214L5-32101		BRACKET,RELEASE-CYL	ブラケット	1	[PC]
A2	224W5-30201		BOOSTER-ASSY,CLUTCH	クラッチブースタアッセン	1	[PC] INC.14-55
14	NO PART NO.	#	BODY,BOOSTER	ボディ	1	[PC]
15	224W5-32511		SPOOL,FLOW-DIVIDER	スプール	1	[PC]
16	522A2-18011		SPRING,FLOW-DIVIDER	スプリング	1	[PC]
17	522A2-18021		PLUG	プラグ	1	[PC]
18	522A2-18031	*	O-RING	Oリング	1	[PC]
19	522A2-18041		PLUG	プラグ	1	[PC]
20	522A2-18051	*	GASKET	ガスケット	1	[PC]
21	224W5-32401	*	PISTON,POWER	ピストン	1	[PC]
22	522A2-18071		VALVE,CONTROL	バルブ	1	[PC]
23	522A2-18081		SPRING,CONTROL-VALVE	スプリング	1	[PC]
24	522A2-18091		PLUG,PISTON	プラグ	1	[PC]
25	522A2-18101	*	O-RING	Oリング	1	[PC]
26	522A2-18111	*	RING,SNAP	スナップリング	1	[PC]
27	522A2-18121	*	O-RING	Oリング	1	[PC]
28	522A2-18131	*	RING,SNAP	スナップリング	1	[PC]
29	224W5-42401		PISTON,REACTION	ピストン	1	[PC]
30	224W5-32421		SPRING,RELIEF-VALVE	スプリング	1	[PC]
31	522A2-18161		SEAT,CONTROL-VALVE	シート	1	[PC]
32	522A2-18171	*	PIN	ピン	1	[PC]
33	224W5-42431		PISTON,REACTION	ピストン	1	[PC]
34	522A2-18201		WASHER	ワッシャ	1	[PC]
35	522A2-18211	*	RING,SNAP	スナップリング	1	[PC]
36	522A2-18221		SPRING,RETURN,VALVE	スプリング	1	[PC]
37	224W5-32441	*	PISTON,MASTER-CYL	ピストン	1	[PC]
38	224W5-32551		SPRING,RETURN,PISTON	スプリング	1	[PC]
39	224W5-32521	*	GUIDE,REACTION	ガイド	1	[PC]
40	224W5-32451	*	O-RING	Oリング	1	[PC]
41	224W5-32461	*	RING,SNAP	スナップリング	1	[PC]
42	522A2-18281	*	O-RING	Oリング	2	[PC]
43	224W5-32471	*	BOOT	ブーツ	1	[PC]
44	522A2-18301		ROD,PUSH	ロッド	1	[PC]
45	522A2-18311		BOLT	ボルト	2	[PC]
46	522A2-18341		BOLT,UNION	ボルト	1	[PC]
47	522A2-18351		UNION	ユニオン	1	[PC]

FIG.132 FOOT PEDAL CYLINDER (CLUTCH):[PC]

(F5H25460) ﾌｯﾄﾍﾟﾀﾞﾙｼﾘﾝﾀﾞ

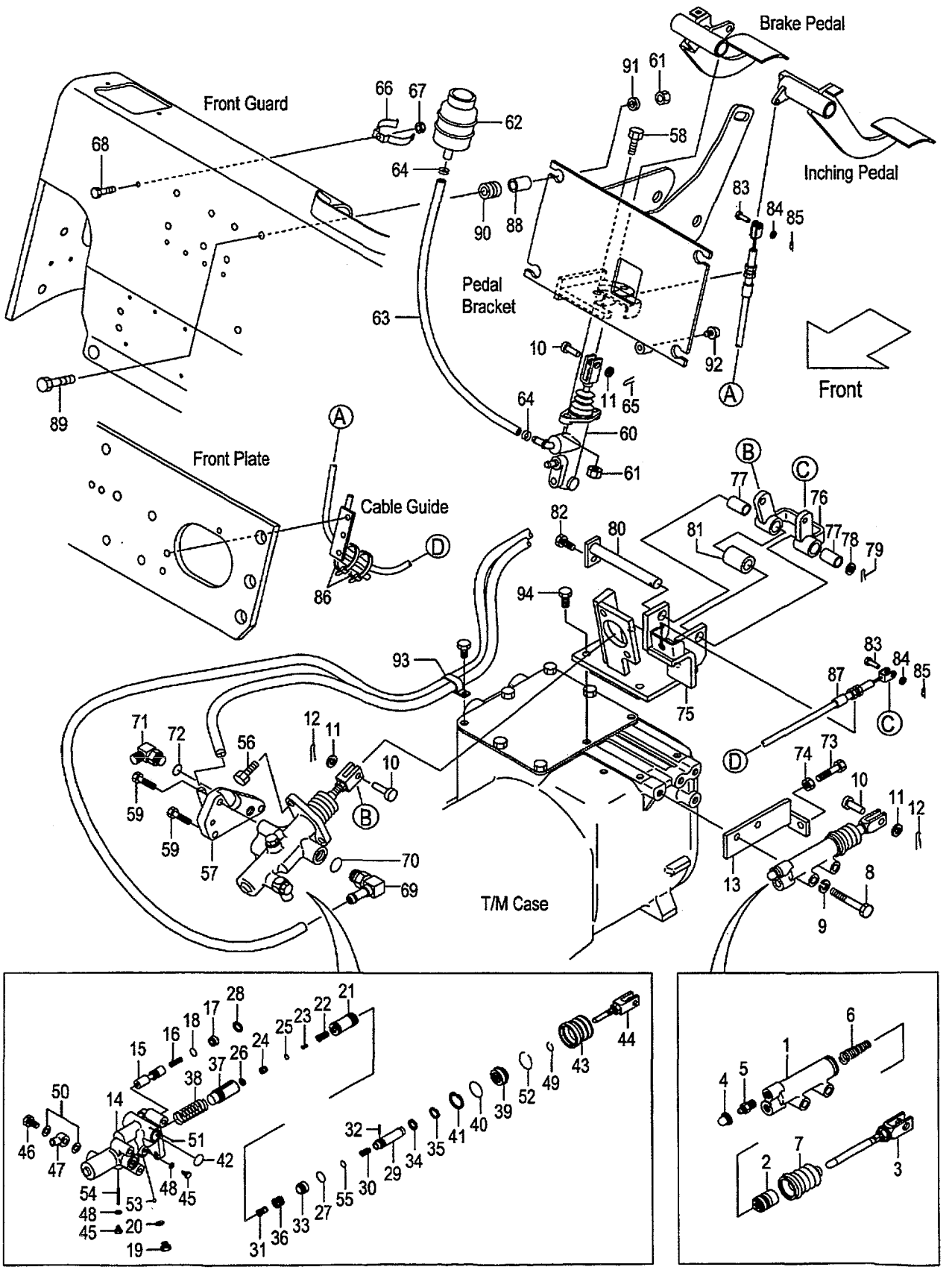

A:FG20C6H FG25C6H
B:FD20C6H FD25C6H

Item No	Part No.	Mark	Description		Req'd	Remarks : Serial No.
48	522A2-18321	*	GASKET	ｶﾞｽｹｯﾄ	2	[PC]
49	522A2-18331	*	RING,SNAP	ｽﾅｯﾌﾟﾘﾝｸﾞ	1	[PC]
50	522A2-18361	*	GASKET	ｶﾞｽｹｯﾄ	2	[PC]
51	522A2-18371	*	BALL	ﾎﾞｰﾙ	1	[PC]
52	224W5-32481	*	RING,SNAP	ｽﾅｯﾌﾟﾘﾝｸﾞ	1	[PC]
53	522A2-18391	*	BALL	ﾎﾞｰﾙ	1	[PC]
54	224W5-32491	*	PIN	ﾋﾟﾝ	1	[PC]
55	55952-18021	*	O-RING	Oﾘﾝｸﾞ	1	[PC]
56	01184-10025		BOLT	ﾎﾞﾙﾄ	2	[PC]
57	239H5-42461		ADAPTER	ｱﾀﾞﾌﾟﾀ	1	[PC]
58	01184-10030		BOLT	ﾎﾞﾙﾄ	2	[PC]
59	01184-10055		BOLT	ﾎﾞﾙﾄ	3	[PC]
60	239A5-40101		CYL,BRAKE-MASTER	ｼﾘﾝﾀﾞ	1	A:1-15023 B:1-189 [PC]SEE FIG.140
-	239A5-40102		CYL,BRAKE-MASTER	ｼﾘﾝﾀﾞ	1	A:15024- B:190- [PC]SEE FIG.140A
61	01400-00010		NUT	ﾅｯﾄ	6	[PC]
62	23775-42101		TANK,RESERVE	ﾀﾝｸ	1	[PC]
63	22655-42591		HOSE,RESERVE	ﾎｰｽ	1	[PC]
64	25595-42491		CLIP,HOSE	ｸﾘｯﾌﾟ	2	[PC]
65	02200-32025		PIN,COTTER	ﾋﾟﾝ	1	[PC]
66	224G5-42061		CLIP,RESERVE-TANK	ｸﾘｯﾌﾟ	1	[PC]
67	01400-00006		NUT	ﾅｯﾄ	1	[PC]
68	239A5-42381		BOLT	ﾎﾞﾙﾄ	1	[PC]
A3	224W7-60311		FITTING-ASSY,HOSE	ﾎｰｽﾌｨｯﾃｨﾝｸﾞｱｯｾﾝ	1	[PC] INC.69,70
69	NO PART NO.	#	FITTING,HOSE	ﾌｨｯﾃｨﾝｸﾞ	1	[PC]
70	89140-00006		O-RING	Oﾘﾝｸﾞ	1	[PC]
A4	04150-20202		ELBOW-ASSY	ｴﾙﾎﾞｱｯｾﾝ	1	[PC] INC.71,72
71	NO PART NO.	#	ELBOW	ｴﾙﾎﾞ	1	[PC]
72	03320-00110		O-RING	Oﾘﾝｸﾞ	1	[PC]
73	01100-10030		BOLT	ﾎﾞﾙﾄ	1	[PC]
74	01402-00010		NUT	ﾅｯﾄ	1	[PC]
A5	239H5-40191		BRACKET-ASSY,BOOSTER	ﾌﾞﾗｹｯﾄｱｯｾﾝ	1	[PC] INC.75-82
75	239H5-40201		BRACKET,BOOSTER	ﾌﾞﾗｹｯﾄ	1	[PC]
A6	239H5-40211		LINK-ASSY	ﾘﾝｸｱｯｾﾝ	1	[PC] INC.76,77
76	239H5-42301		LINK	ﾘﾝｸ	1	[PC]
77	256C7-42281		BUSHING	ﾌﾞｯｼﾝｸﾞ	2	[PC]
78	02000-00016		WASHER	ﾜｯｼｬ	1	[PC]
79	02200-04025		PIN,COTTER	ﾋﾟﾝ	1	[PC]
80	239H5-40311		SHAFT	ｼｬﾌﾄ	1	[PC]
81	239H5-42371		SPACER	ｽﾍﾟｰｻ	1	[PC]
82	01183-08016		BOLT	ﾎﾞﾙﾄ	1	[PC]
83	02262-08020		PIN,CLEVIS	ﾋﾟﾝ	2	[PC]
84	02000-00008		WASHER	ﾜｯｼｬ	2	[PC]
85	02200-02016		PIN,COTTER	ﾋﾟﾝ	2	[PC]
86	04913-11200		BAND	ﾊﾞﾝﾄﾞ	2	[PC]
87	239H5-42451		CABLE,INCHING	ｹｰﾌﾞﾙ	1	[PC]
88	239B5-42721		COLLAR	ｶﾗｰ	4	[PC]

FIG.132 FOOT PEDAL CYLINDER (CLUTCH):[PC]

(F5H25460) ﾌｯﾄﾍﾟﾀﾞﾙｼﾘﾝﾀﾞ

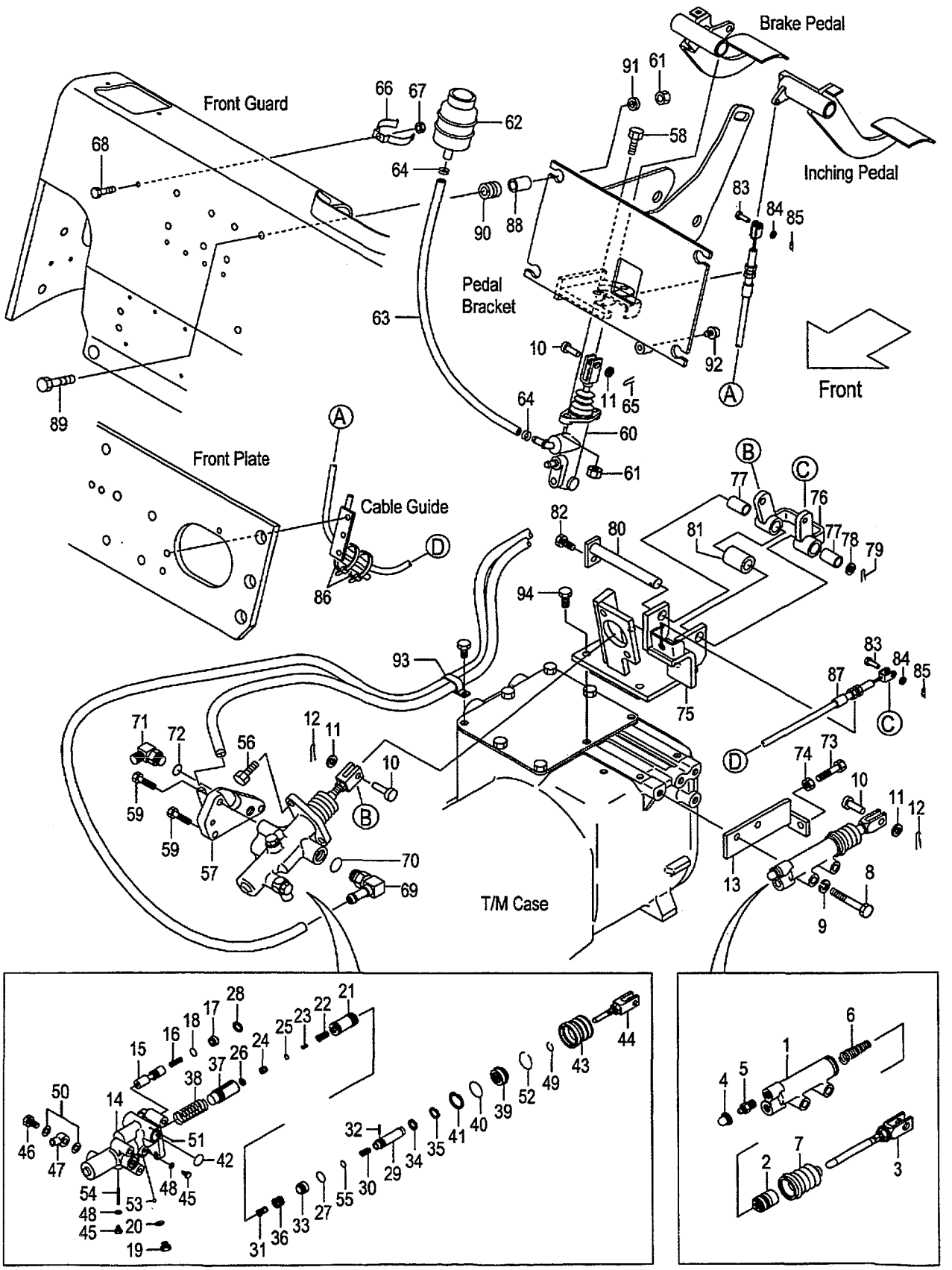

A:FG20C6H FG25C6H
B:FD20C6H FD25C6H

FIG.132
(F5H25460)

Item No	Part No.	Mark	Description		Req'd	Remarks : Serial No.
89	216G6-43241		BOLT	ﾎﾞﾙﾄ	4	[PC]
90	216G6-42031		RUBBER,MOUNT	ﾗﾊﾞｰ	4	[PC]
91	22252-32251		WASHER	ﾜｯｼｬ	4	[PC]
92	23456-42181		STOPPER	ｽﾄｯﾊﾟ	1	[PC]
93	214A2-42331		CLIP	ｸﾘｯﾌﾟ	1	[PC]
94	01184-10030		BOLT	ﾎﾞﾙﾄ	4	[PC]
K1	522A2-11601		KIT,OVERHAUL	ｵｰﾊﾞｰﾎｰﾙｷｯﾄ	1	[PC] INC.2,4,6,7
K2	224W5-32501		KIT,OVERHAUL	ｵｰﾊﾞｰﾎｰﾙｷｯﾄ	1	[PC] INC.18,20,21,25-28,32,35, 37,39-43,48-55

FIG.133 FOOT PEDAL CYLINDER (TOR-CON)

(F5H254B0) ﾌｯﾄﾍﾟﾀﾞﾙｼﾘﾝﾀﾞ

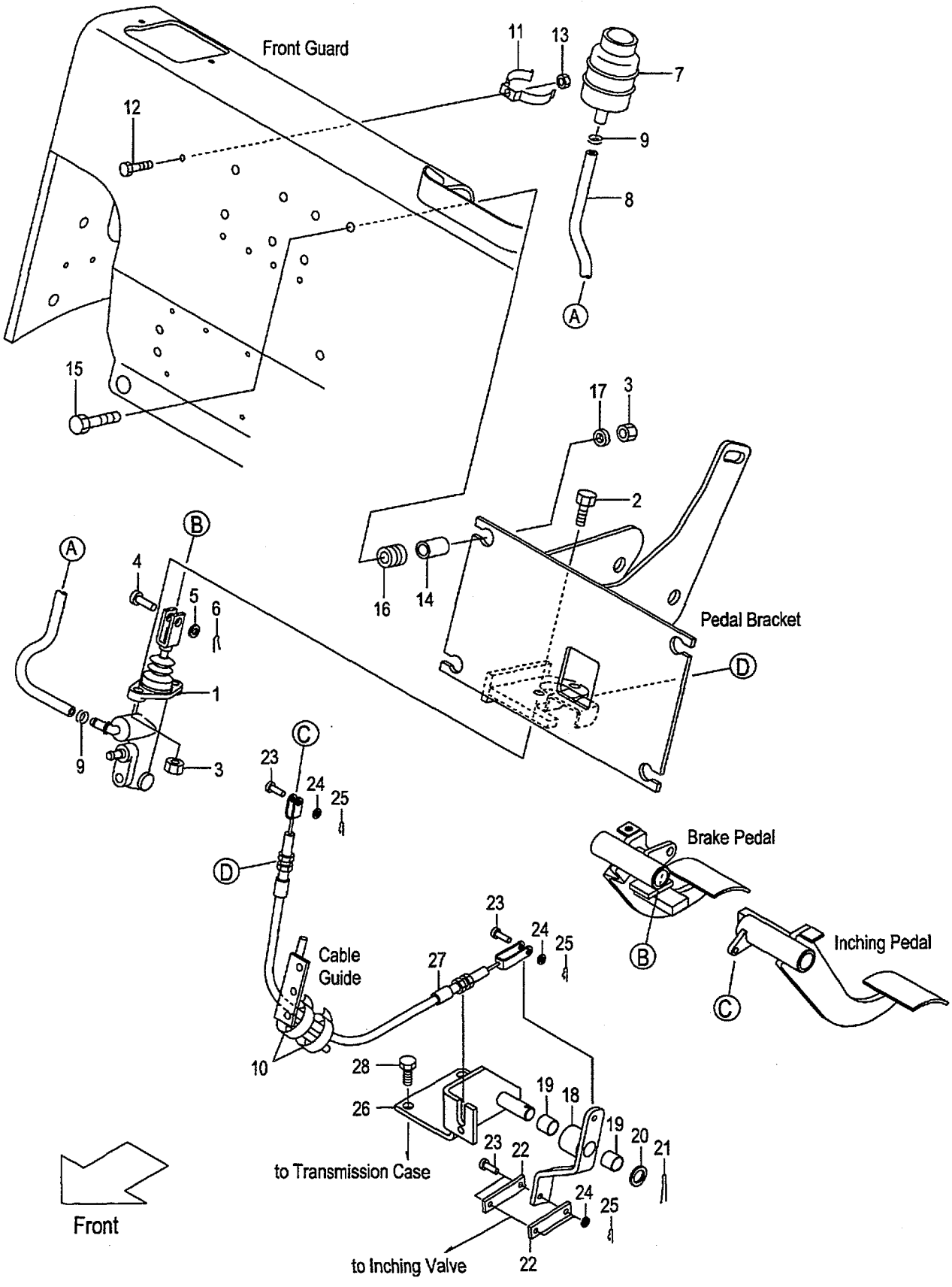

A:FG20T6H FG25T6H
B:FD20T6H FD25T6H

FIG.133
(F5H254B0)

Item No	Part No.	Mark	Description		Req'd	Remarks : Serial No.
1	239A5-40101		CYL,BRAKE-MASTER	ｼﾘﾝﾀﾞ	1	A:1-15023 B:1-189 SEE FIG.140
-	239A5-40102		CYL,BRAKE-MASTER	ｼﾘﾝﾀﾞ	1	A:15024- B:190- SEE FIG.140A
2	01184-10030		BOLT	ﾎﾞﾙﾄ	2	
3	01400-00010		NUT	ﾅｯﾄ	6	
4	02262-10030		PIN,CLEVIS	ﾋﾟﾝ	1	
5	02000-00010		WASHER	ﾜｯｼｬ	1	
6	02200-32025		PIN,COTTER	ﾋﾟﾝ	1	
7	23775-42101		TANK,RESERVE	ﾀﾝｸ	1	
8	22655-42591		HOSE	ﾎｰｽ	1	
9	25595-42491		CLIP,HOSE	ｸﾘｯﾌﾟ	2	
10	04913-11200		BAND	ﾊﾞﾝﾄﾞ	2	
11	224G5-42061		CLIP,RESERVE-TANK	ｸﾘｯﾌﾟ	1	
12	239A5-42381		BOLT	ﾎﾞﾙﾄ	1	
13	01400-00006		NUT	ﾅｯﾄ	1	
14	239B5-42721		COLLAR	ｶﾗｰ	4	
15	216G6-43241		BOLT	ﾎﾞﾙﾄ	4	
16	216G6-42031		RUBBER,MOUNT	ﾗﾊﾞｰ	4	
17	22252-32251		WASHER	ﾜｯｼｬ	4	
A1	218H5-40521		LINK-ASSY	ﾘﾝｸｱｯｾﾝ	1	A:1-15028 B:1-224 INC.18,19
-	239G5-40101		LINK-ASSY	ﾘﾝｸｱｯｾﾝ	1	A:15029- B:225- INC.18,19
18	NO PART NO.	#	LINK	ﾘﾝｸ	1	A:1-15028 B:1-224
-	NO PART NO.	#	LINK	ﾘﾝｸ	1	A:15029- B:225-
19	23647-40121		BUSHING	ﾌﾞｯｼﾝｸﾞ	2	
20	02000-00016		WASHER	ﾜｯｼｬ	1	
21	02200-04025		PIN,COTTER	ﾋﾟﾝ	1	
22	218H5-42521		PLATE	ﾌﾟﾚｰﾄ	2	
23	02262-06025		PIN,CLEVIS	ﾋﾟﾝ	4	
24	02000-00006		WASHER	ﾜｯｼｬ	4	
25	216G5-22081		PIN,SNAP	ﾋﾟﾝ	4	
26	239G5-40501		BRACKET,LINK	ﾌﾞﾗｹｯﾄ	1	A:1-15028 B:1-224
-	239G5-40502		BRACKET,LINK	ﾌﾞﾗｹｯﾄ	1	A:15029- B:225-
27	239B5-42501		CABLE,INCHING	ｹｰﾌﾞﾙ	1	
28	01184-10020		BOLT	ﾎﾞﾙﾄ	2	

FIG.134 FOOT PEDAL CYLINDER (OIL CLUTCH)

(F5H254F0) ﾌｯﾄﾍﾟﾀﾞﾙｼﾘﾝﾀﾞ

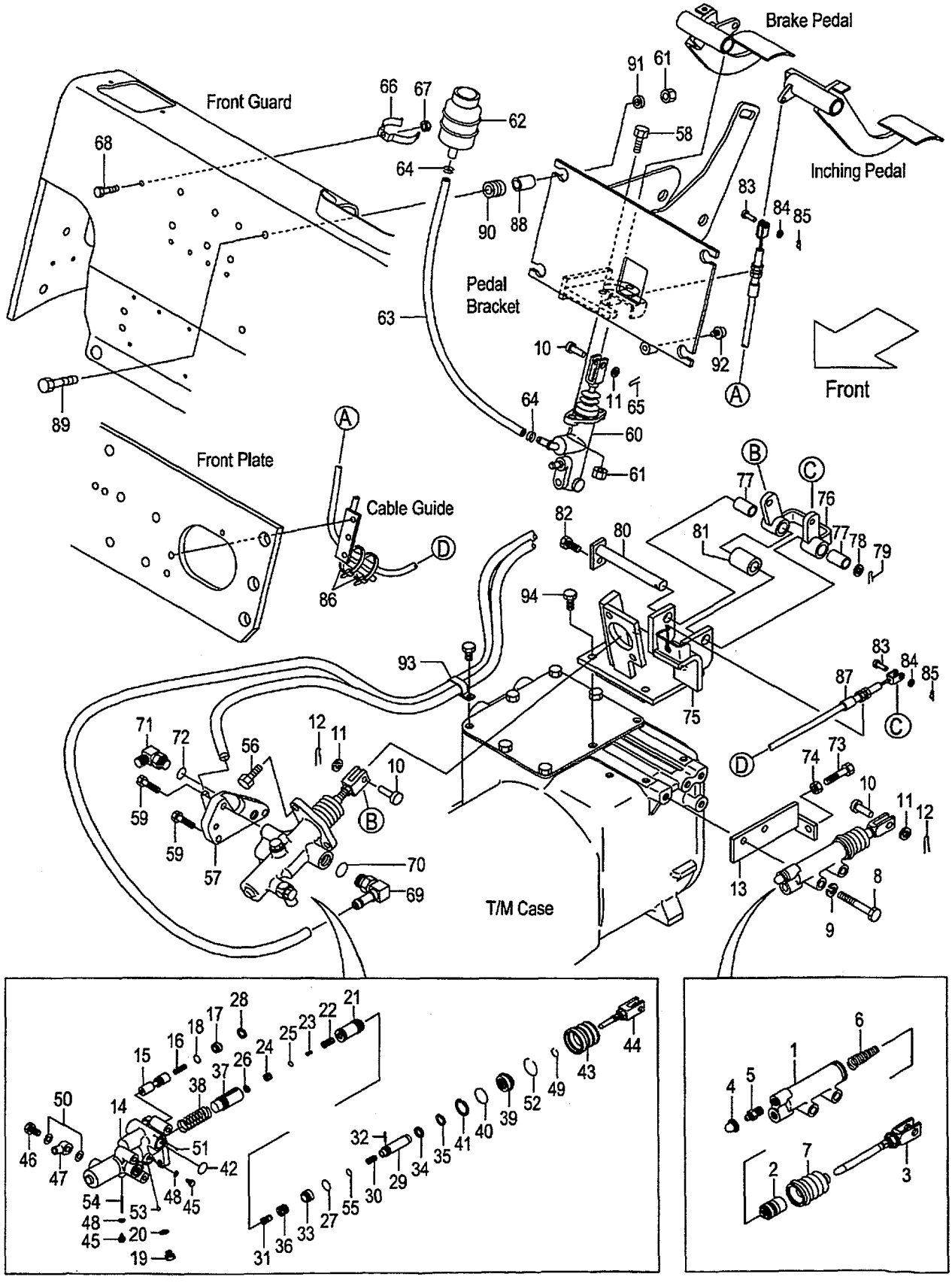

A:FG20W6H FG25W6H
B:FD20W6H FD25W6H

FIG.134
(F5H254F0)

Item No	Part No.	Mark	Description		Req'd	Remarks : Serial No.
A1	522A2-10401		CYL-ASSY,CLUTCH-RELEASE	クラッチリリースシリンダアッセン	1	INC.1-7
1	NO PART NO.	#	BODY,CYL	ボディ	1	
2	522A2-18541	*	PISTON,RELEASE-CYL	ピストン	1	
3	522A2-18551		ROD,PUSH	ロッド	1	
4	522A2-18561	*	CAP,BLEEDER-PLUG	キャップ	1	
5	522A2-18571		PLUG,BLEEDER	プラグ	1	
6	522A2-18581	*	SPRING,CONICAL	スプリング	1	
7	522A2-18591	*	BOOT	ブーツ	1	
8	01103-10060		BOLT	ボルト	2	
9	02010-00010		WASHER	ワッシャ	2	
10	02262-10030		PIN,CLEVIS	ピン	3	
11	02000-00010		WASHER	ワッシャ	3	
12	02200-32020		PIN,COTTER	ピン	2	
13	214L5-32101		BRACKET,RELEASE-CYL	ブラケット	1	
A2	224W5-30201		BOOSTER-ASSY,CLUTCH	クラッチブースタアッセン	1	INC.14-55
14	NO PART NO.	#	BODY,BOOSTER	ボディ	1	
15	224W5-32511		SPOOL,FLOW-DIVIDER	スプール	1	
16	522A2-18011		SPRING,FLOW-DIVIDER	スプリング	1	
17	522A2-18021		PLUG	プラグ	1	
18	522A2-18031	*	O-RING	Oリング	1	
19	522A2-18041		PLUG	プラグ	1	
20	522A2-18051	*	GASKET	ガスケット	1	
21	224W5-32401	*	PISTON,POWER	ピストン	1	
22	522A2-18071		VALVE,CONTROL	バルブ	1	
23	522A2-18081		SPRING,CONTROL-VALVE	スプリング	1	
24	522A2-18091		PLUG,PISTON	プラグ	1	
25	522A2-18101	*	O-RING	Oリング	1	
26	522A2-18111	*	RING,SNAP	スナップリング	1	
27	522A2-18121	*	O-RING	Oリング	1	
28	522A2-18131	*	RING,SNAP	スナップリング	1	
29	224W5-42401		PISTON,REACTION	ピストン	1	
30	224W5-32421		SPRING,RELIEF-VALVE	スプリング	1	
31	522A2-18161		SEAT,CONTROL-VALVE	シート	1	
32	522A2-18171	*	PIN	ピン	1	
33	224W5-42431		PISTON,REACTION	ピストン	1	
34	522A2-18201		WASHER	ワッシャ	1	
35	522A2-18211	*	RING,SNAP	スナップリング	1	
36	522A2-18221		SPRING,RETURN,VALVE	スプリング	1	
37	224W5-32441	*	PISTON,MASTER-CYL	ピストン	1	
38	224W5-32551		SPRING,RETURN,PISTON	スプリング	1	
39	224W5-32521	*	GUIDE,REACTION	ガイド	1	
40	224W5-32451	*	O-RING	Oリング	1	
41	224W5-32461	*	RING,SNAP	スナップリング	1	
42	522A2-18281	*	O-RING	Oリング	2	
43	224W5-32471	*	BOOT	ブーツ	1	
44	522A2-18301		ROD,PUSH	ロッド	1	
45	522A2-18311		BOLT	ボルト	2	
46	522A2-18341		BOLT,UNION	ボルト	1	
47	522A2-18351		UNION	ユニオン	1	

FIG.134 FOOT PEDAL CYLINDER (OIL CLUTCH)

(F5H254F0) ﾌｯﾄﾍﾟﾀﾞﾙｼﾘﾝﾀﾞ

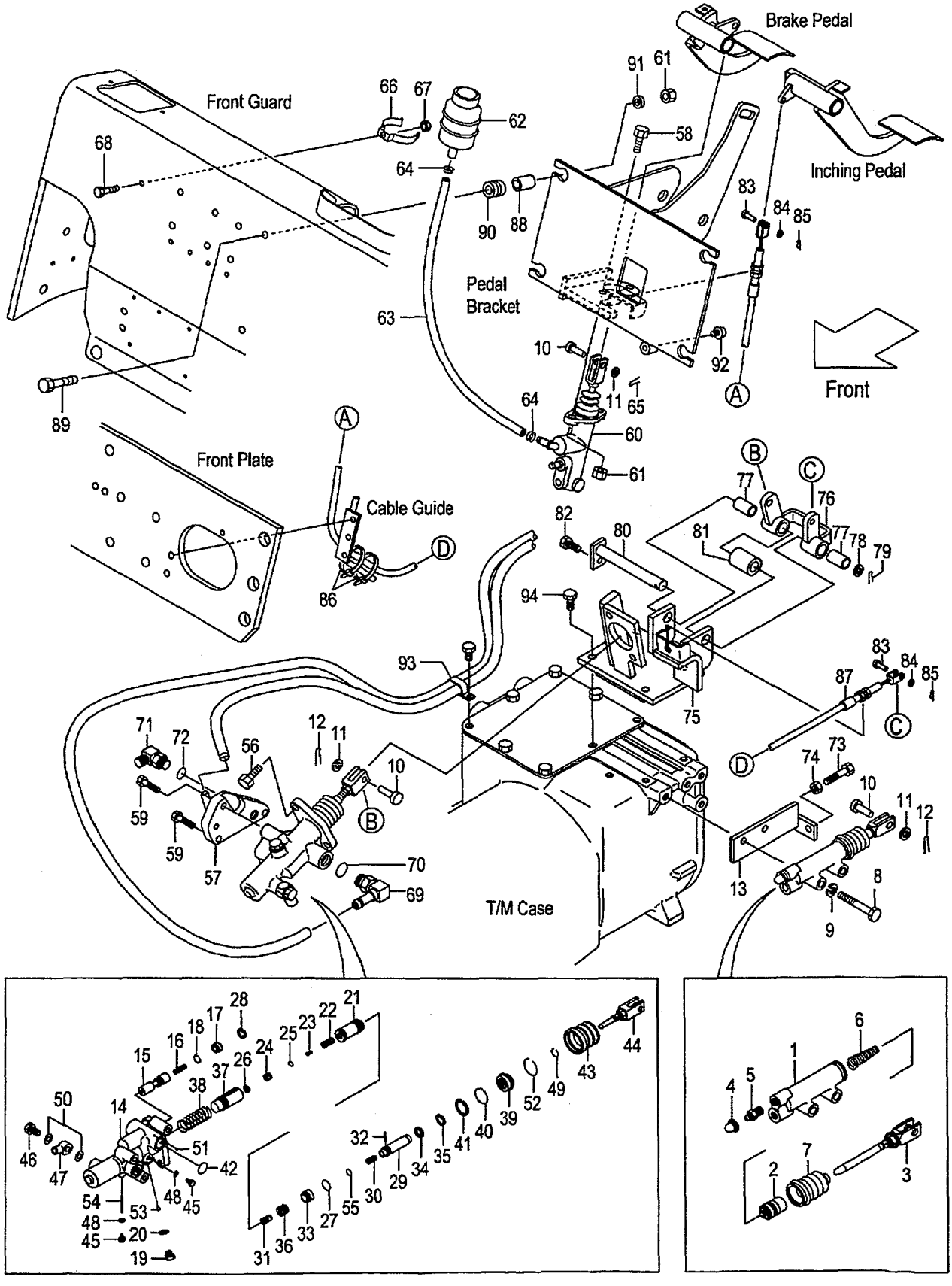

A:FG20W6H FG25W6H
B:FD20W6H FD25W6H

Item No	Part No.	Mark	Description		Req'd	Remarks : Serial No.
48	522A2-18321	*	GASKET	ｶﾞｽｹｯﾄ	2	
49	522A2-18331	*	RING,SNAP	ｽﾅｯﾌﾟﾘﾝｸﾞ	1	
50	522A2-18361	*	GASKET	ｶﾞｽｹｯﾄ	2	
51	522A2-18371	*	BALL	ﾎﾞｰﾙ	1	
52	224W5-32481	*	RING,SNAP	ｽﾅｯﾌﾟﾘﾝｸﾞ	1	
53	522A2-18391	*	BALL	ﾎﾞｰﾙ	1	
54	224W5-32491	*	PIN	ﾋﾟﾝ	1	
55	55952-18021	*	O-RING	Oﾘﾝｸﾞ	1	
56	01184-10025		BOLT	ﾎﾞﾙﾄ	2	
57	239H5-42461		ADAPTER	ｱﾀﾞﾌﾟﾀ	1	
58	01184-10030		BOLT	ﾎﾞﾙﾄ	2	
59	01184-10055		BOLT	ﾎﾞﾙﾄ	3	
60	239A5-40101		CYL,BRAKE-MASTER	ｼﾘﾝﾀﾞ	1	A:1-15023 B:1-189 SEE FIG.140
-	239A5-40102		CYL,BRAKE-MASTER	ｼﾘﾝﾀﾞ	1	A:15024- B:190- SEE FIG.140A
61	01400-00010		NUT	ﾅｯﾄ	6	
62	23775-42101		TANK,RESERVE	ﾀﾝｸ	1	
63	22655-42591		HOSE,RESERVE	ﾎｰｽ	1	
64	25595-42491		CLIP,HOSE	ｸﾘｯﾌﾟ	2	
65	02200-32025		PIN,COTTER	ﾋﾟﾝ	1	
66	224G5-42061		CLIP,RESERVE-TANK	ｸﾘｯﾌﾟ	1	
67	01400-00006		NUT	ﾅｯﾄ	1	
68	239A5-42381		BOLT	ﾎﾞﾙﾄ	1	
A3	224W7-60311		FITTING-ASSY,HOSE	ﾎｰｽﾌｨｯﾃｨﾝｸﾞｱｯｾﾝ	1	INC.69,70
69	NO PART NO.	#	FITTING,HOSE	ﾌｨｯﾃｨﾝｸﾞ	1	
70	89140-00006		O-RING	Oﾘﾝｸﾞ	1	
A4	04150-20202		ELBOW-ASSY	ｴﾙﾎﾞｱｯｾﾝ	1	INC.71,72
71	NO PART NO.	#	ELBOW	ｴﾙﾎﾞ	1	
72	03320-00110		O-RING	Oﾘﾝｸﾞ	1	
73	01100-10030		BOLT	ﾎﾞﾙﾄ	1	
74	01402-00010		NUT	ﾅｯﾄ	1	
A5	239H5-40191		BRACKET-ASSY,BOOSTER	ﾌﾞﾗｹｯﾄｱｯｾﾝ	1	INC.75-82
75	239H5-40201		BRACKET,BOOSTER	ﾌﾞﾗｹｯﾄ	1	
A6	239H5-40211		LINK-ASSY	ﾘﾝｸｱｯｾﾝ	1	INC.76,77
76	239H5-42301		LINK	ﾘﾝｸ	1	
77	256C7-42281		BUSHING	ﾌﾞｯｼﾝｸﾞ	2	
78	02000-00016		WASHER	ﾜｯｼｬ	1	
79	02200-04025		PIN,COTTER	ﾋﾟﾝ	1	
80	239H5-40311		SHAFT	ｼｬﾌﾄ	1	
81	239H5-42371		SPACER	ｽﾍﾟｰｻ	1	
82	01183-08016		BOLT	ﾎﾞﾙﾄ	1	
83	02262-08020		PIN,CLEVIS	ﾋﾟﾝ	2	
84	02000-00008		WASHER	ﾜｯｼｬ	2	
85	02200-02016		PIN,COTTER	ﾋﾟﾝ	2	
86	04913-11200		BAND	ﾊﾞﾝﾄﾞ	2	
87	239H5-42451		CABLE,INCHING	ｹｰﾌﾞﾙ	1	
88	239B5-42721		COLLAR	ｶﾗｰ	4	

FIG.134 FOOT PEDAL CYLINDER (OIL CLUTCH)

(F5H254F0) ﾌｯﾄﾍﾟﾀﾞﾙｼﾘﾝﾀﾞ

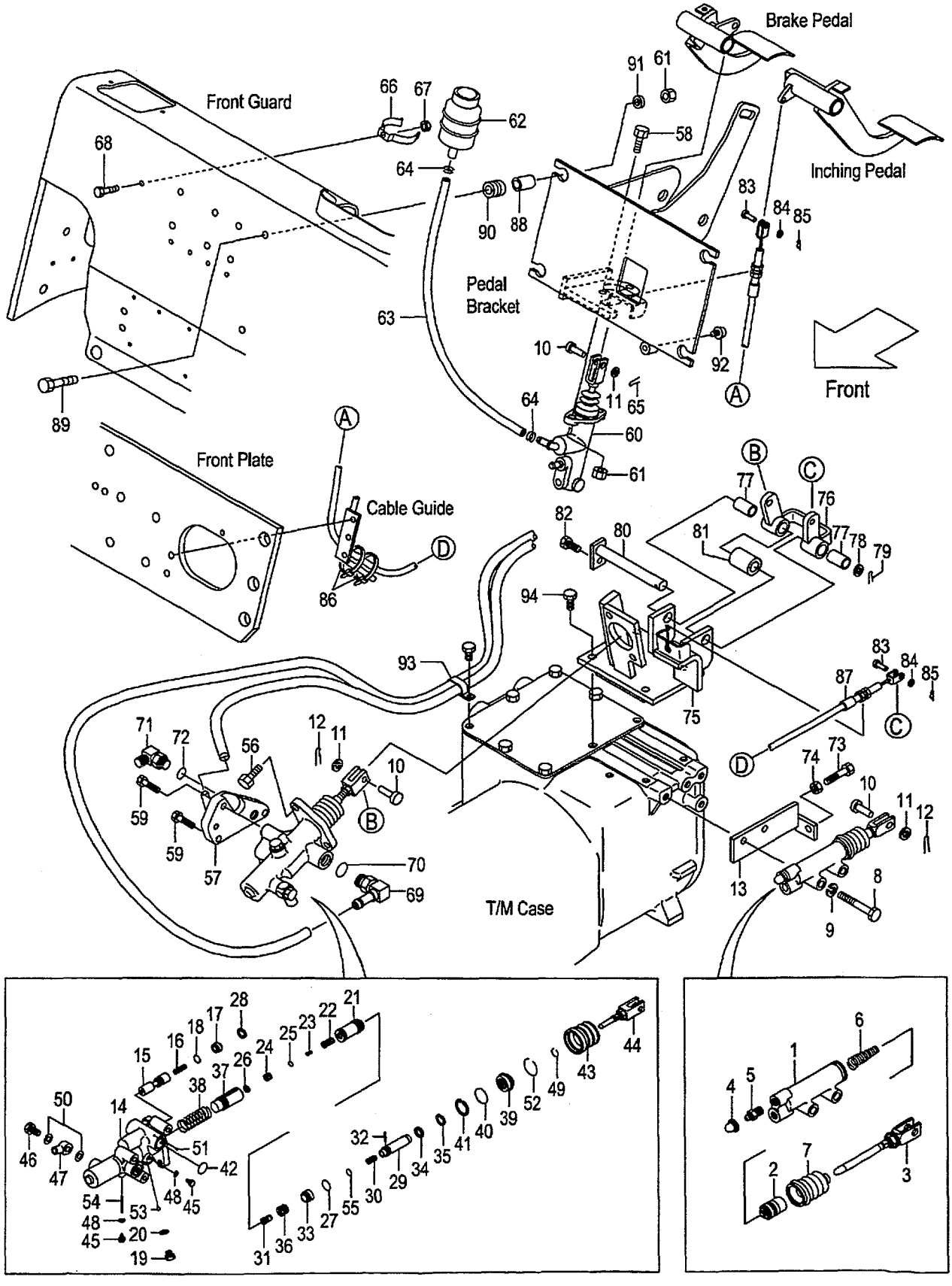

A:FG20W6H FG25W6H
B:FD20W6H FD25W6H

Item No	Part No.	Mark	Description		Req'd	Remarks : Serial No.
89	216G6-43241		BOLT	ﾎﾞﾙﾄ	4	
90	216G6-42031		RUBBER,MOUNT	ﾗﾊﾞｰ	4	
91	22252-32251		WASHER	ﾜｯｼｬ	4	
92	23456-42181		STOPPER	ｽﾄｯﾊﾟ	1	
93	214A2-42331		CLIP	ｸﾘｯﾌﾟ	1	
94	01184-10030		BOLT	ﾎﾞﾙﾄ	4	
K1	522A2-11601		KIT,OVERHAUL	ｵｰﾊﾞﾎｰﾙｷｯﾄ	1	INC.2,4,6,7
K2	224W5-32501		KIT,OVERHAUL	ｵｰﾊﾞﾎｰﾙｷｯﾄ	1	INC.18,20,21,25-28,32,35, 37,39-43,48-55

FIG.135 BRAKE PIPE (CLUTCH)

(F5H25430) ﾌﾞﾚｰｷﾊﾟｲﾌﾟ

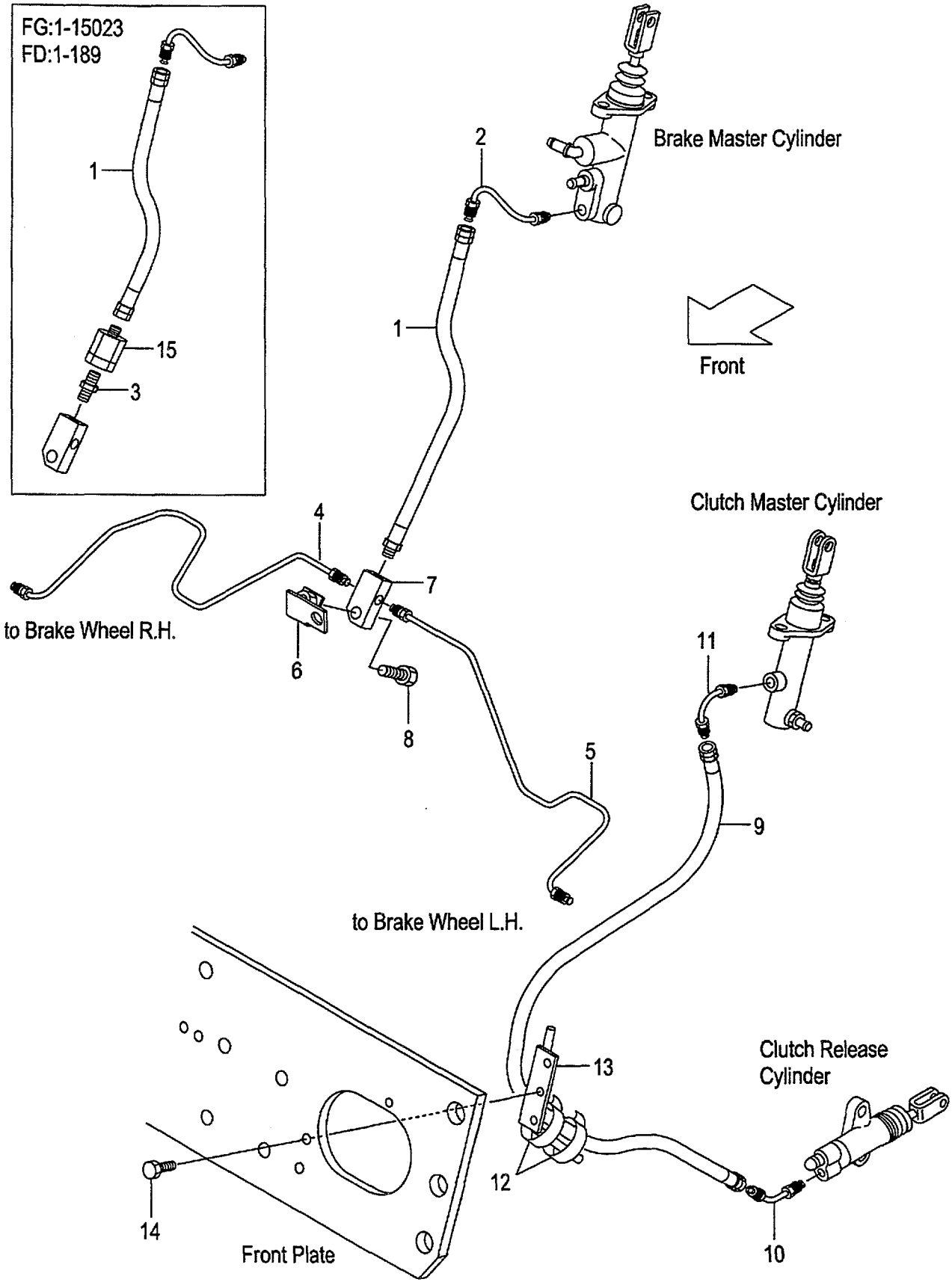

A:FG20C6H FG25C6H
B:FD20C6H FD25C6H

FIG.135
(F5H25430)

Item No	Part No.	Mark	Description		Req'd	Remarks : Serial No.
1	239A5-42491		HOSE,BRAKE	ﾎｰｽ	1	A:1-15009 B:1-134
-	218G5-42011		HOSE,BRAKE	ﾎｰｽ	1	A:15010-15023 B:135-189
-	239A5-42071		HOSE,BRAKE	ﾎｰｽ	1	A:15024- B:190-
2	218G5-42021		PIPE,BRAKE-MASTER	ﾊﾟｲﾌﾟ	1	
3	239A5-42441		ADAPTER	ｱﾀﾞﾌﾟﾀ	1	A:1-15023 B:1-189
4	239B5-42601		PIPE,BRAKE,RH	ﾊﾟｲﾌﾟ	1	
5	239B5-42621		PIPE,BRAKE,LH	ﾊﾟｲﾌﾟ	1	
6	239B5-42421		BRACKET,THREE-WAY	ﾌﾞﾗｹｯﾄ	1	
7	23455-42021		THREE-WAY	ｽﾘｰｳｴｲ	1	
8	01184-10030		BOLT	ﾎﾞﾙﾄ	1	
9	239A5-42451		HOSE,CLUTCH	ﾎｰｽ	1	
10	239A5-42461		PIPE,CLUTCH-RELEASE	ﾊﾟｲﾌﾟ	1	
11	239A5-42471		PIPE,CLUTCH-MASTER	ﾊﾟｲﾌﾟ	1	
12	04913-11200		BAND	ﾊﾞﾝﾄﾞ	2	
13	239A5-42351		GUIDE,CABLE	ｶﾞｲﾄﾞ	1	(WITHOUT EXC,EXE,EXK,EXN,OBT)
14	216H3-92291		BOLT	ﾎﾞﾙﾄ	2	(WITHOUT EXC,EXE,EXK,EXN,OBT)
15	239B5-42701		VALVE,CHECK	ﾊﾞﾙﾌﾞ	1	A:1-15023 B:1-189

FIG.136 BRAKE PIPE (CLUTCH):[PC]

(F5H25470) ﾌﾞﾚｰｷﾊﾟｲﾌﾟ

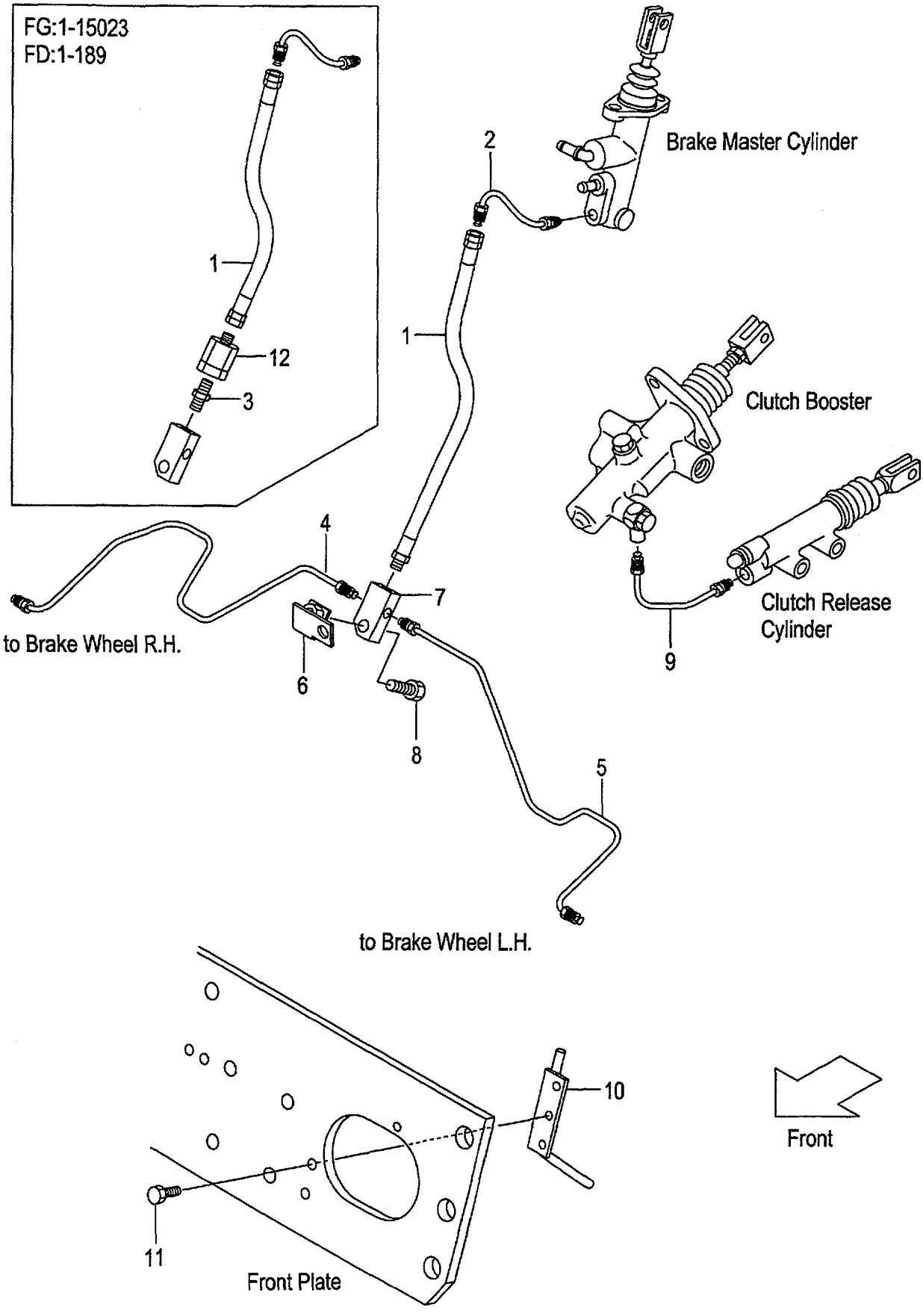

A:FG20C6H FG25C6H
B:FD20C6H FD25C6H

FIG.136
(F5H25470)

Item No	Part No.	Mark	Description		Req'd	Remarks : Serial No.
1	218G5-42011		HOSE,BRAKE	ﾎｰｽ	1	A:1-15023 B:1-189 [PC]
-	239A5-42071		HOSE,BRAKE	ﾎｰｽ	1	A:15024- B:190- [PC]
2	218G5-42021		PIPE,BRAKE-MASTER	ﾊﾟｲﾌﾟ	1	[PC]
3	239A5-42441		ADAPTER	ｱﾀﾞﾌﾟﾀ	1	A:1-15023 B:1-189 [PC]
4	239B5-42601		PIPE,BRAKE,RH	ﾊﾟｲﾌﾟ	1	[PC]
5	239B5-42621		PIPE,BRAKE,LH	ﾊﾟｲﾌﾟ	1	[PC]
6	239B5-42421		BRACKET,THREE-WAY	ﾌﾞﾗｹｯﾄ	1	[PC]
7	23455-42021		THREE-WAY	ｽﾘｰｳｴｲ	1	[PC]
8	01184-10030		BOLT	ﾎﾞﾙﾄ	1	[PC]
9	239H5-42381		PIPE,RELEASE-CYL	ﾊﾟｲﾌﾟ	1	[PC]
10	239A5-42351		GUIDE,CABLE	ｶﾞｲﾄﾞ	1	[PC]
11	216H3-92291		BOLT	ﾎﾞﾙﾄ	2	[PC]
12	239B5-42701		VALVE,CHECK	ﾊﾞﾙﾌﾞ	1	A:1-15023 B:1-189 [PC]

FIG.137 BRAKE PIPE (OIL CLUTCH)

(F5H254G0) ブレーキパイプ

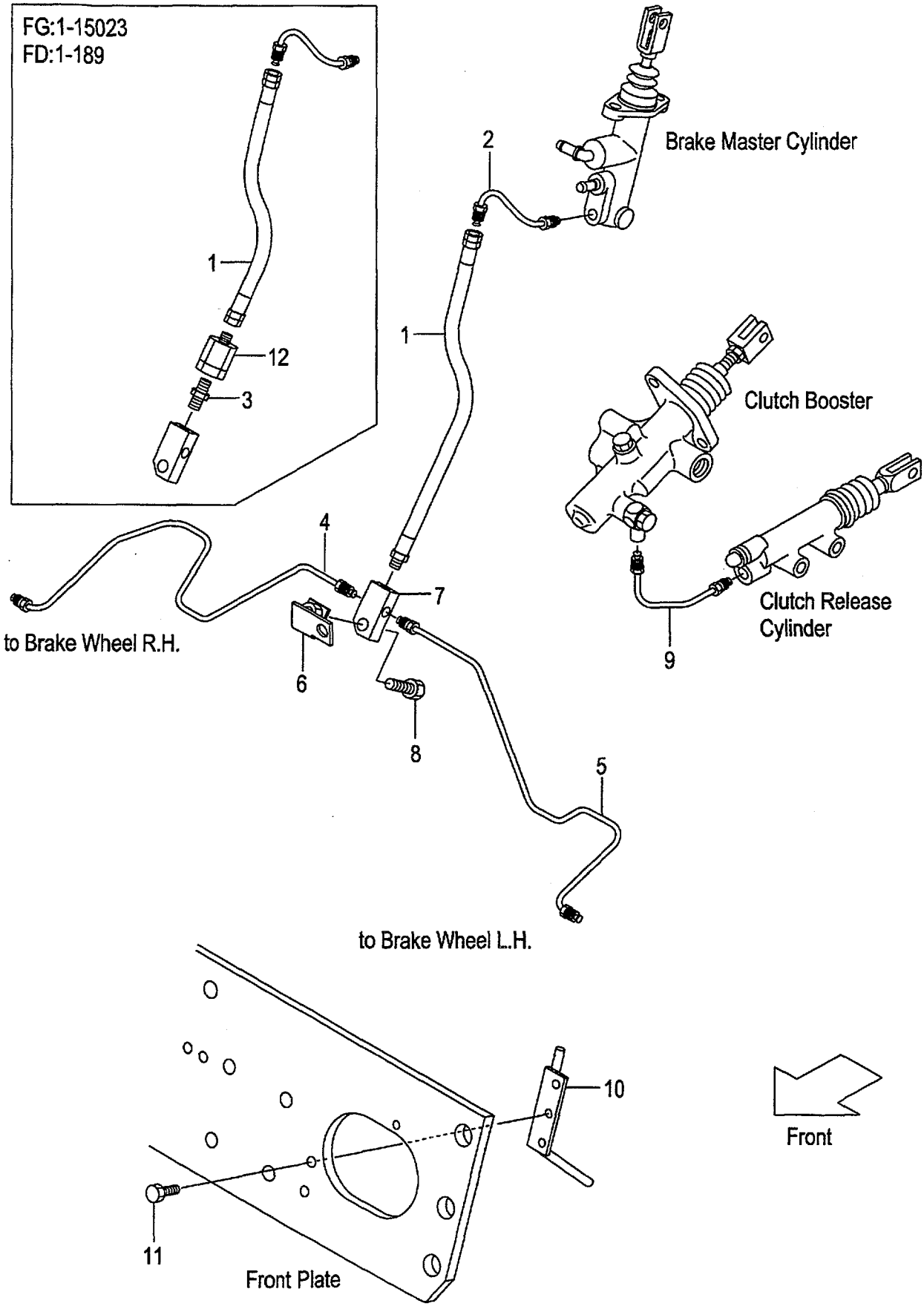

A:FG20W6H FG25W6H
B:FD20W6H FD25W6H

FIG.137
(F5H254G0)

Item No	Part No.	Mark	Description		Req'd	Remarks : Serial No.
1	218G5-42011		HOSE,BRAKE	ホース	1	A:1-15023 B:1-189
-	239A5-42071		HOSE,BRAKE	ホース	1	A:15024- B:190-
2	218G5-42021		PIPE,BRAKE-MASTER	パイプ	1	
3	239A5-42441		ADAPTER	アダプタ	1	A:1-15023 B:1-189
4	239B5-42601		PIPE,BRAKE,RH	パイプ	1	
5	239B5-42621		PIPE,BRAKE,LH	パイプ	1	
6	239B5-42421		BRACKET,THREE-WAY	ブラケット	1	
7	23455-42021		THREE-WAY	スリーウエイ	1	
8	01184-10030		BOLT	ボルト	1	
9	239H5-42381		PIPE,RELEASE-CYL	パイプ	1	
10	239A5-42351		GUIDE,CABLE	ガイド	1	
11	216H3-92291		BOLT	ボルト	2	
12	239B5-42701		VALVE,CHECK	バルブ	1	A:1-15023 B:1-189

FIG.138 BRAKE PIPE (TOR-CON)

(F5H254D0) ﾌﾞﾚｰｷﾊﾟｲﾌﾟ

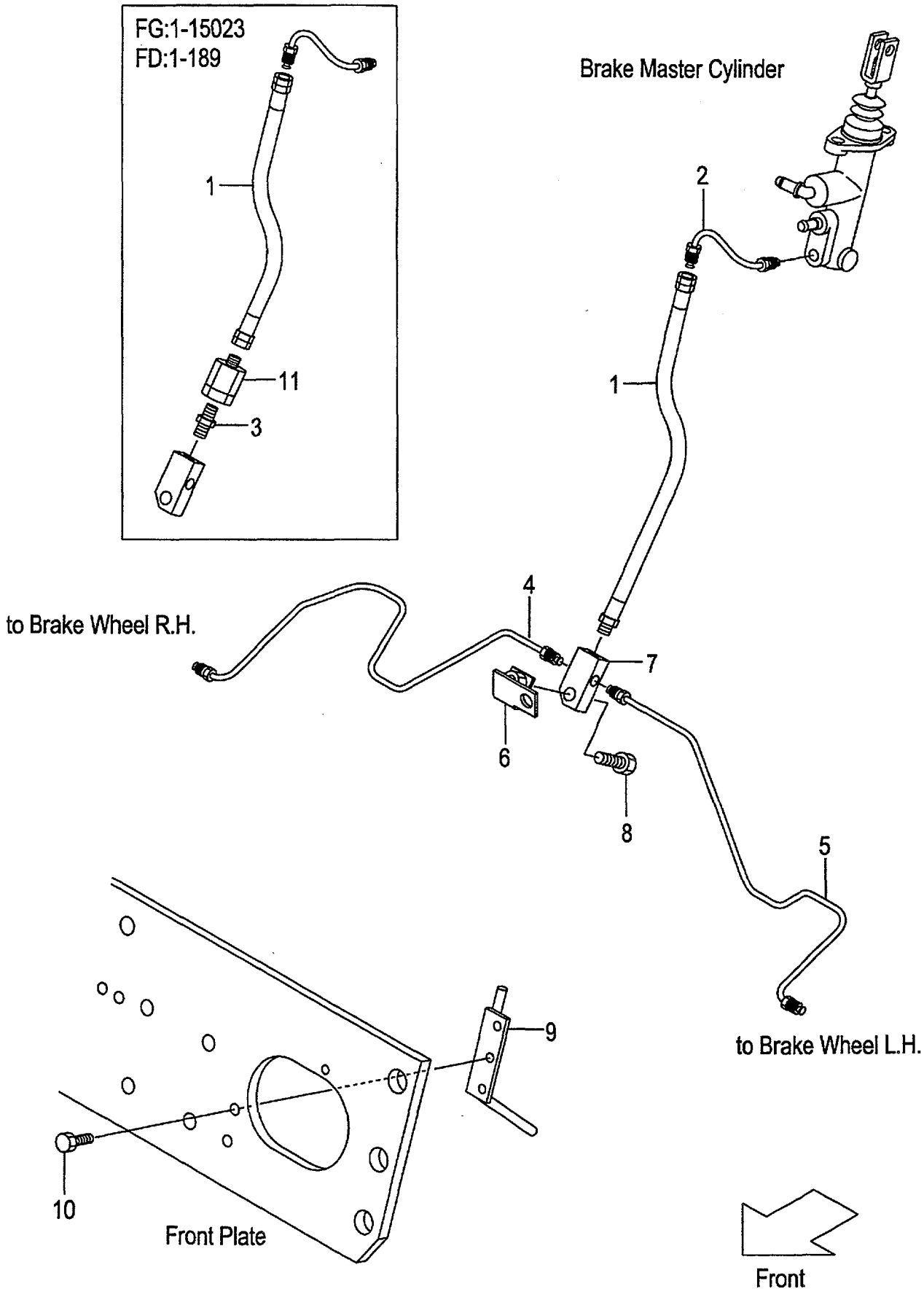

A:FG20T6H FG25T6H
B:FD20T6H FD25T6H

FIG.138
(F5H254D0)

Item No	Part No.	Mark	Description		Req'd	Remarks : Serial No.
1	239A5-42491		HOSE,BRAKE	ﾎｰｽ	1	A:1-15009 B:1-134
-	218G5-42011		HOSE,BRAKE	ﾎｰｽ	1	A:15010-15023 B:135-189
-	239A5-42071		HOSE,BRAKE	ﾎｰｽ	1	A:15024- B:190-
2	218G5-42021		PIPE,BRAKE-MASTER	ﾊﾟｲﾌﾟ	1	
3	239A5-42441		ADAPTER	ｱﾀﾞﾌﾟﾀ	1	A:1-15023 B:1-189
4	239B5-42601		PIPE,BRAKE,RH	ﾊﾟｲﾌﾟ	1	
5	239B5-42621		PIPE,BRAKE,LH	ﾊﾟｲﾌﾟ	1	
6	239B5-42421		BRACKET,THREE-WAY	ﾌﾞﾗｹｯﾄ	1	
7	23455-42021		THREE-WAY	ｽﾘｰｳｴｲ	1	
8	01184-10030		BOLT	ﾎﾞﾙﾄ	1	
9	239A5-42351		GUIDE,CABLE	ｶﾞｲﾄﾞ	1	(WITHOUT EXC,EXE,EXK,EXN,OBT)
10	216H3-92291		BOLT	ﾎﾞﾙﾄ	2	(WITHOUT EXC,EXE,EXK,EXN,OBT)
11	239B5-42701		VALVE,CHECK	ﾊﾞﾙﾌﾞ	1	A:1-15023 B:1-189

FIG.139 FOOT PEDAL COVER

(F5H25440) ﾌｯﾄﾍﾟﾀﾞﾙｶﾊﾞｰ

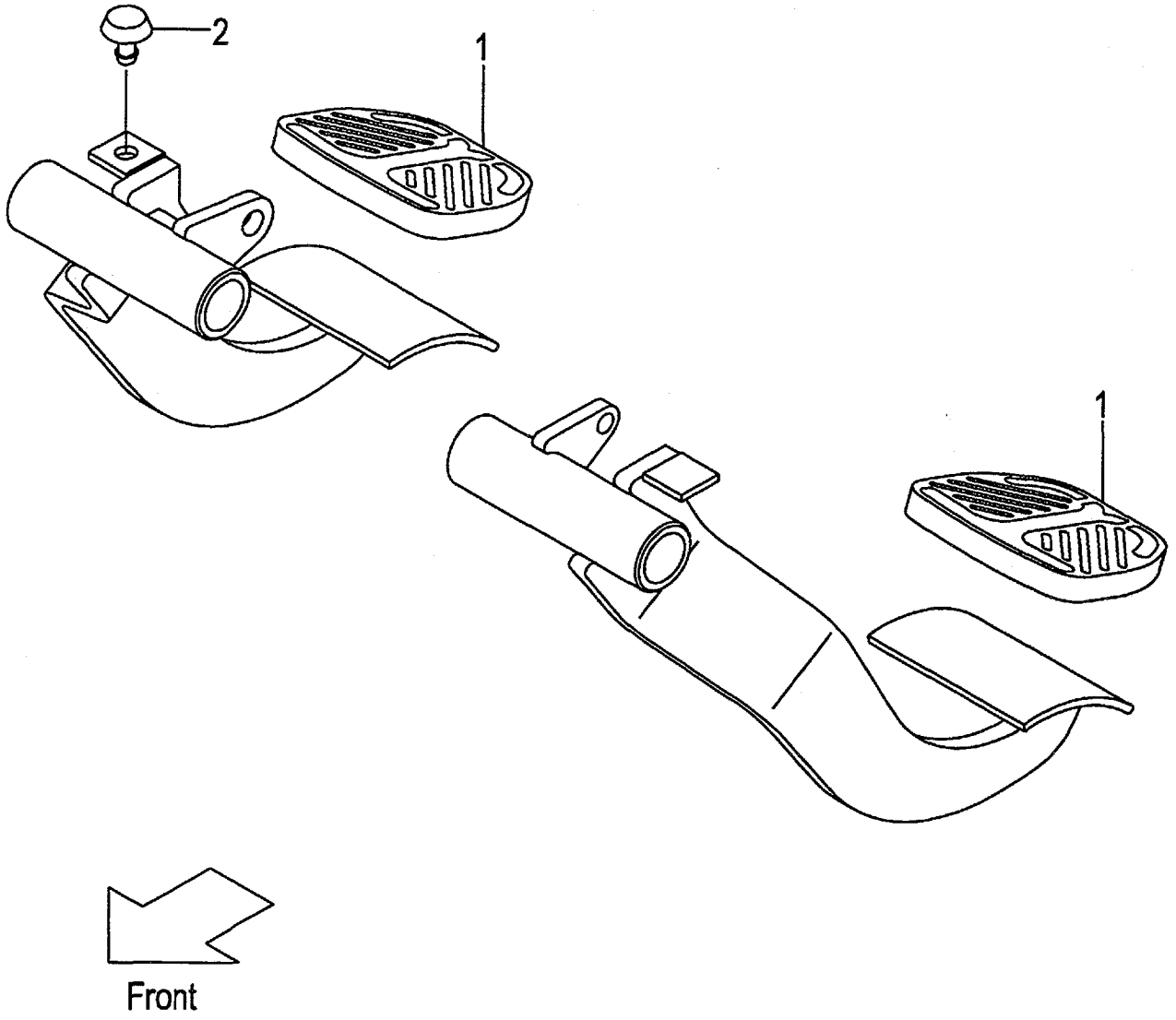

A:FG20C6H FG25C6H D:FD20C6H FD25C6H
B:FG20T6H FG25T6H E:FD20T6H FD25T6H
C:FG20W6H FG25W6H F:FD20W6H FD25W6H

FIG.139
(F5H25440)

Item No	Part No.	Mark	Description	Req'd	Remarks : Serial No.
1	239A5-42301		COVER,HEAD カバー	2	
2	23235-40091		RUBBER ラバー	1	

FIG.140 BRAKE MASTER CYLINDER

(F5H254E0) ﾌﾞﾚｰｷﾏｽﾀｼﾘﾝﾀﾞ

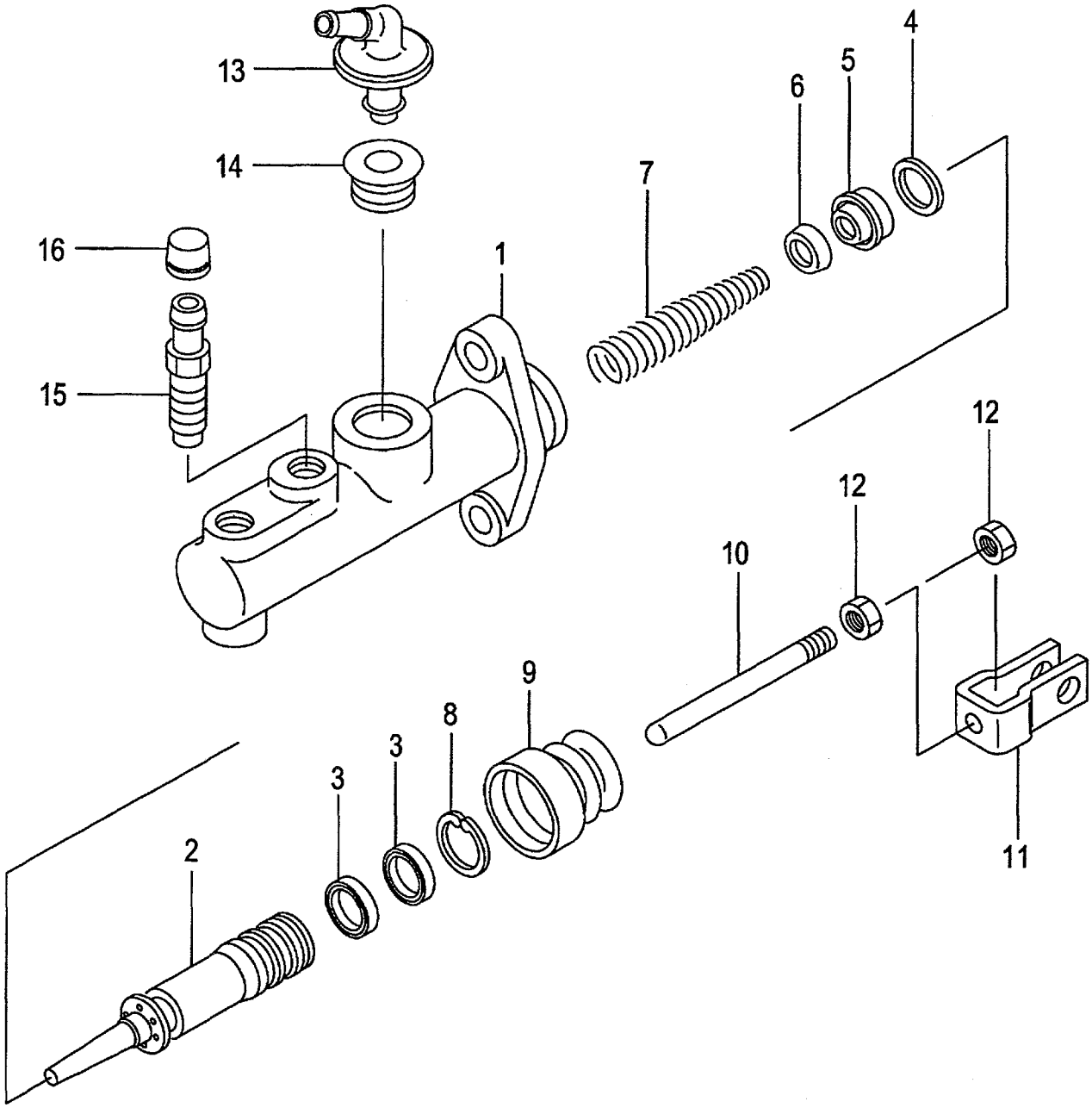

A:FG20C6H FG25C6H:1-15023 D:FD20C6H FD25C6H:1-189
B:FG20T6H FG25T6H:1-15023 E:FD20T6H FD25T6H:1-189
C:FG20W6H FG25W6H:1-15023 F:FD20W6H FD25W6H:1-189

FIG.140
(F5H254E0)

Item No	Part No.	Mark	Description		Req'd	Remarks : Serial No.
A1	239A5-40101		CYL-ASSY,BRAKE-MASTER	ｼﾘﾝﾀﾞｱｯｾﾝ	1	INC.1-16
1	NO PART NO.	#	BODY,CYL	ﾎﾞﾃﾞｨ	1	
2	239A5-42171	*	PISTON	ﾋﾟｽﾄﾝ	1	
3	239A5-42121	*	CAP,SECONDARY	ｷｬｯﾌﾟ	2	
4	239A5-42101	*	SPACER	ｽﾍﾟｰｻ	1	
5	239A5-42181	*	CAP,PRIMARY	ｷｬｯﾌﾟ	1	
6	239A5-42191	*	THIMBLE	ｼﾝﾌﾞﾙ	1	
7	239A5-42261	*	SPRING	ｽﾌﾟﾘﾝｸﾞ	1	
8	25595-42311	*	RING,SNAP	ｽﾅｯﾌﾟﾘﾝｸﾞ	1	
9	239A5-42221	*	BOOT	ﾌﾞｰﾂ	1	
10	239A5-42271		ROD,PUSH	ﾛｯﾄﾞ	1	
11	239A5-42281		YOKE	ﾖｰｸ	1	
12	239A5-42291		NUT	ﾅｯﾄ	2	
13	25595-42411		UNION,FILLER	ﾕﾆｵﾝ	1	
14	25595-42421		BUSHING	ﾌﾞｯｼﾝｸﾞ	1	
15	239A5-42311		VALVE,BLEEDER	ﾊﾞﾙﾌﾞ	1	
16	239A5-42321	*	CAP,BLEEDER	ｷｬｯﾌﾟ	1	
K1	239A5-40631		KIT,REPAIR	ﾘﾍﾟｱｷｯﾄ	1	INC.2-9,16

FIG.140A BRAKE MASTER CYLINDER

(F5H254E1) ﾌﾞﾚｰｷﾏｽﾀｼﾘﾝﾀﾞ

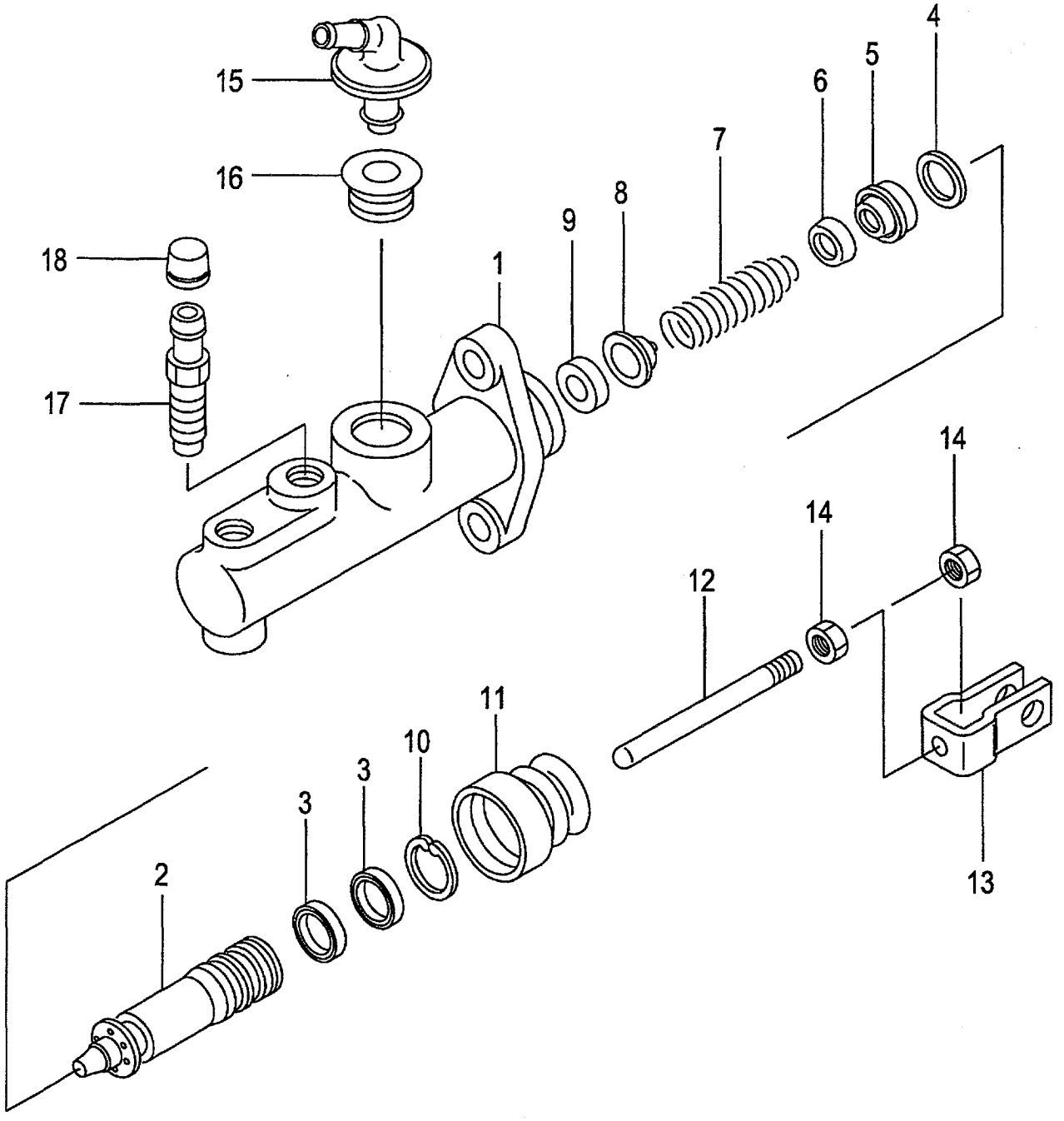

A:FG20C6H FG25C6H:15024- D:FD20C6H FD25C6H:190-
B:FG20T6H FG25T6H:15024- E:FD20T6H FD25T6H:190-
C:FG20W6H FG25W6H:15024- F:FD20W6H FD25W6H:190-

FIG.140A
(F5H254E1)

Item No	Part No.	Mark	Description		Req'd	Remarks : Serial No.
A1	239A5-40102		CYL-ASSY,BRAKE-MASTER	ｼﾘﾝﾀﾞｱｯｾﾝ	1	INC.1-18
1	NO PART NO.	#	BODY,CYL	ﾎﾞﾃﾞｨ	1	
2	239A5-42161	*	PISTON	ﾋﾟｽﾄﾝ	1	
3	239A5-42121	*	CAP,SECONDARY	ｷｬｯﾌﾟ	2	
4	239A5-42101	*	SPACER	ｽﾍﾟｰｻ	1	
5	239A5-42181	*	CAP,PRIMARY	ｷｬｯﾌﾟ	1	
6	239A5-42191	*	THIMBLE	ｼﾝﾌﾞﾙ	1	
7	239A5-42251	*	SPRING	ｽﾌﾟﾘﾝｸﾞ	1	
8	25595-42381		VALVE	ﾊﾞﾙﾌﾞ	1	
9	25595-42391		SEAT,VALVE	ｼｰﾄ	1	
10	25595-42311	*	RING,SNAP	ｽﾅｯﾌﾟﾘﾝｸﾞ	1	
11	239A5-42221	*	BOOT	ﾌﾞｰﾂ	1	
12	239A5-42271		ROD,PUSH	ﾛｯﾄﾞ	1	
13	239A5-42281		YOKE	ﾖｰｸ	1	
14	239A5-42291		NUT	ﾅｯﾄ	2	
15	25595-42411		UNION,FILLER	ﾕﾆｵﾝ	1	
16	25595-42421		BUSHING	ﾌﾞｯｼﾝｸﾞ	1	
17	239A5-42311		VALVE,BLEEDER	ﾊﾞﾙﾌﾞ	1	
18	239A5-42321	*	CAP,BLEEDER	ｷｬｯﾌﾟ	1	
K1	239A5-40641		KIT,REPAIR	ﾘﾍﾟｱｷｯﾄ	1	INC.2-7,10,11,18

FIG.141 BRAKE LEVER

(F5H25510) ﾌﾞﾚｰｷﾚﾊﾞｰ

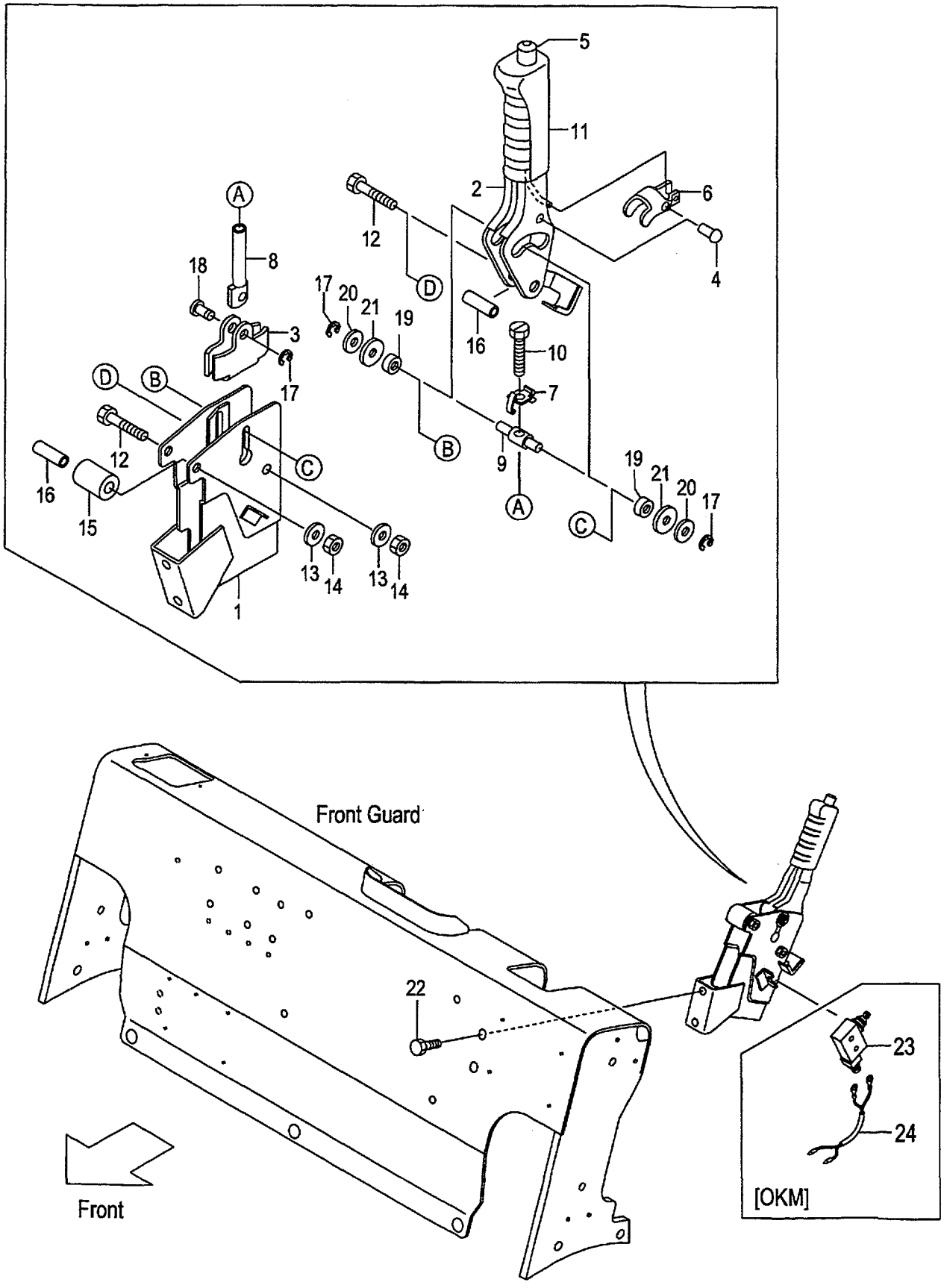

A:FG20C6H FG20T6H FG25C6H FG25T6H FG20W6H FG25W6H
B:FD20C6H FD20T6H FD25C6H FD25T6H FD20W6H FD25W6H

Item No	Part No.	Mark	Description		Req'd	Remarks : Serial No.
A1	239A5-50101		LEVER-ASSY,BRAKE	ﾌﾞﾚｰｷﾚﾊﾞｰｱｯｾﾝ	1	INC.1-21
1	NO PART NO.		BRACKET,BRAKE-LEVER	ﾌﾞﾗｹｯﾄ	1	
2	NO PART NO.		LEVER	ﾚﾊﾞｰ	1	
3	27415-52151		BRACKET	ﾌﾞﾗｹｯﾄ	1	
4	230C5-55021		PIN	ﾋﾟﾝ	1	
5	230C5-55031		ROD,RELEASE	ﾛｯﾄﾞ	1	
6	230C5-55041		PLATE,LOCK	ﾌﾟﾚｰﾄ	1	
7	230C5-55051		PLATE,TENSION	ﾌﾟﾚｰﾄ	1	
8	230C5-55061		ROD,ADJUST	ﾛｯﾄﾞ	1	
9	230C5-55071		PIN,TRUNION	ﾋﾟﾝ	1	
10	230C5-55081		BOLT	ﾎﾞﾙﾄ	1	
11	NO PART NO.		GRIP	ｸﾞﾘｯﾌﾟ	1	
12	01100-08050		BOLT	ﾎﾞﾙﾄ	2	
13	02010-00008		WASHER	ﾜｯｼｬ	2	
14	01400-00008		NUT	ﾅｯﾄ	2	
15	222A5-52111		RUBBER,STOPPER	ﾗﾊﾞｰ	1	
16	230C5-55101		COLLAR	ｶﾗｰ	2	
17	214A5-52131		E-RING	Eﾘﾝｸﾞ	3	
18	230C5-55111		PIN	ﾋﾟﾝ	1	
19	230C5-55121		ROLLER,CAM	ﾛｰﾗ	2	
20	214A5-52121		WASHER	ﾜｯｼｬ	2	
21	214A5-52241		WASHER	ﾜｯｼｬ	2	
22	216G6-43231		BOLT	ﾎﾞﾙﾄ	2	
23	27912-62441		SWITCH,MICRO	ｽｲｯﾁ	1	[OKM]
24	535H3-82261		WIRE-HARNESS,SWITCH	ﾜｲﾔﾊｰﾈｽ	1	[OKM]

FIG.142 FRAME
(F5H26110) フレーム

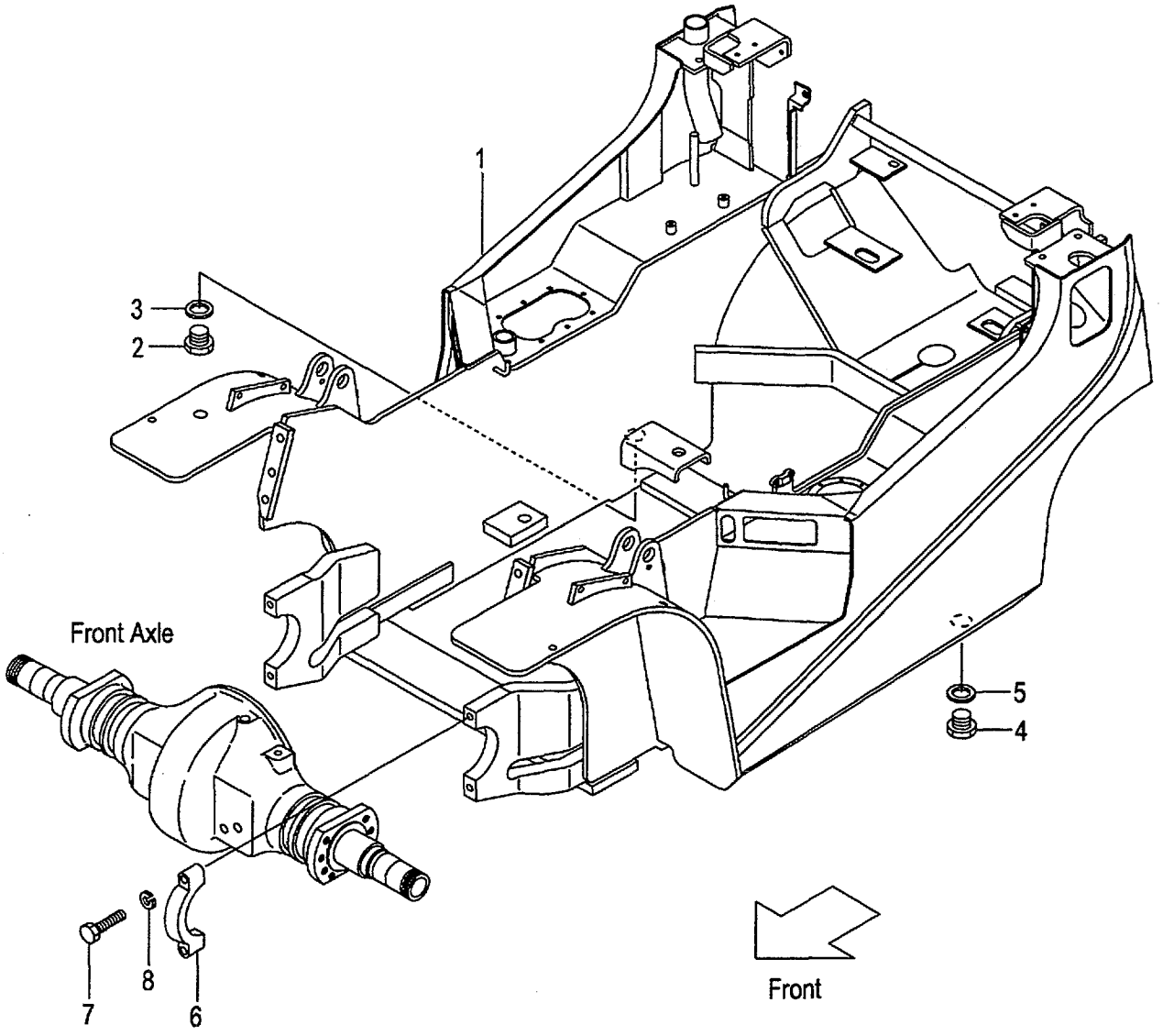

A:FG20C6H FG20T6H FG25C6H FG25T6H C:FD20C6H FD20T6H FD25C6H FD25T6H
B:FG20W6H FG25W6H D:FD20W6H FD25W6H

Item No	Part No.	Mark	Description		Req'd	Remarks : Serial No.
1	NO PART NO.	#	FRAME	ﾌﾚｰﾑ	1	
2	21237-52051		PLUG,DRAIN	ﾌﾟﾗｸﾞ	1	
3	21237-52062		PACKING	ﾊﾟｯｷﾝｸﾞ	1	
4	21237-52051		PLUG,DRAIN	ﾌﾟﾗｸﾞ	1	
5	21237-52062		PACKING	ﾊﾟｯｷﾝｸﾞ	1	
6	277P8-32701		CAP,SUPPORT,F-AXLE	ｷｬｯﾌﾟ	2	
7	01100-16065		BOLT	ﾎﾞﾙﾄ	4	
8	02010-00016		WASHER	ﾜｯｼｬ	4	

FIG.143 OIL TANK (CLUTCH)(TOR-CON)

(F5H261A0) オイルタンク

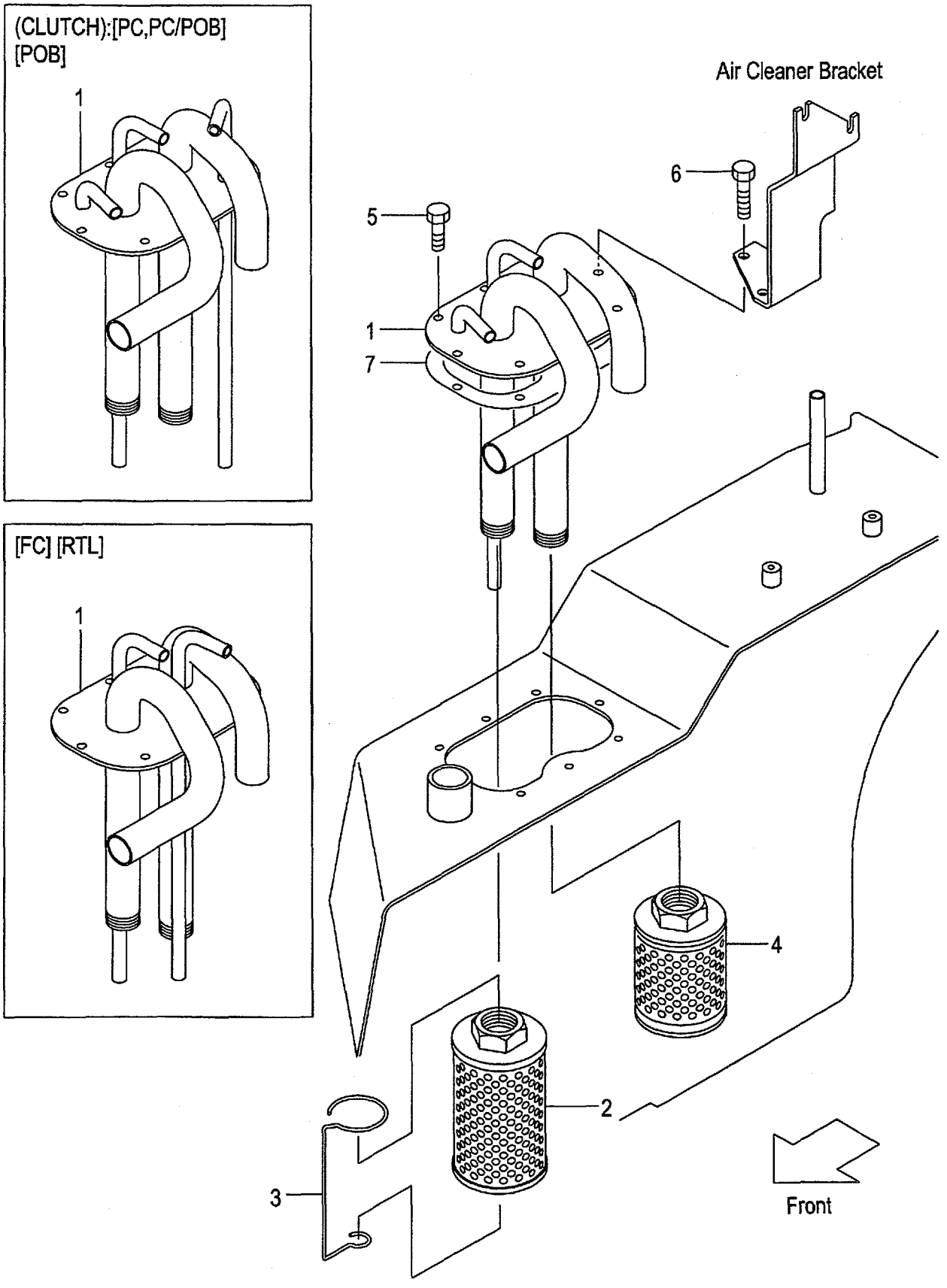

A:FG20C6H FG25C6H C:FD20C6H FD25C6H
B:FG20T6H FG25T6H D:FD20T6H FD25T6H

Item No	Part No.	Mark	Description		Req'd	Remarks : Serial No.
1	239A7-52001		PIPE,SUCTION	ﾊﾟｲﾌﾟ	1	
-	239H7-52001		PIPE,SUCTION	ﾊﾟｲﾌﾟ	1	A,C [PC][PC/POB]
-	239H7-52001		PIPE,SUCTION	ﾊﾟｲﾌﾟ	1	[POB]
-	539G3-72001		PIPE,SUCTION	ﾊﾟｲﾌﾟ	1	[FC][RTL]
A1	271A7-52301		FILTER-ASSY,RETURN	ﾌｨﾙﾀｱｯｾﾝ	1	INC.2,3
2	214A7-52081		FILTER,RETURN	ﾌｨﾙﾀ	1	
3	NO PART NO.	#	WIRE	ﾜｲﾔ	1	
4	216G7-52051		FILTER,SUCTION	ﾌｨﾙﾀ	1	
5	229F2-22151		BOLT	ﾎﾞﾙﾄ	6	
6	229F2-22161		BOLT	ﾎﾞﾙﾄ	2	
7	216G2-22202		PACKING	ﾊﾟｯｷﾝｸﾞ	1	

FIG.144 OIL TANK (OIL CLUTCH)

(F5H261B0) オイルタンク

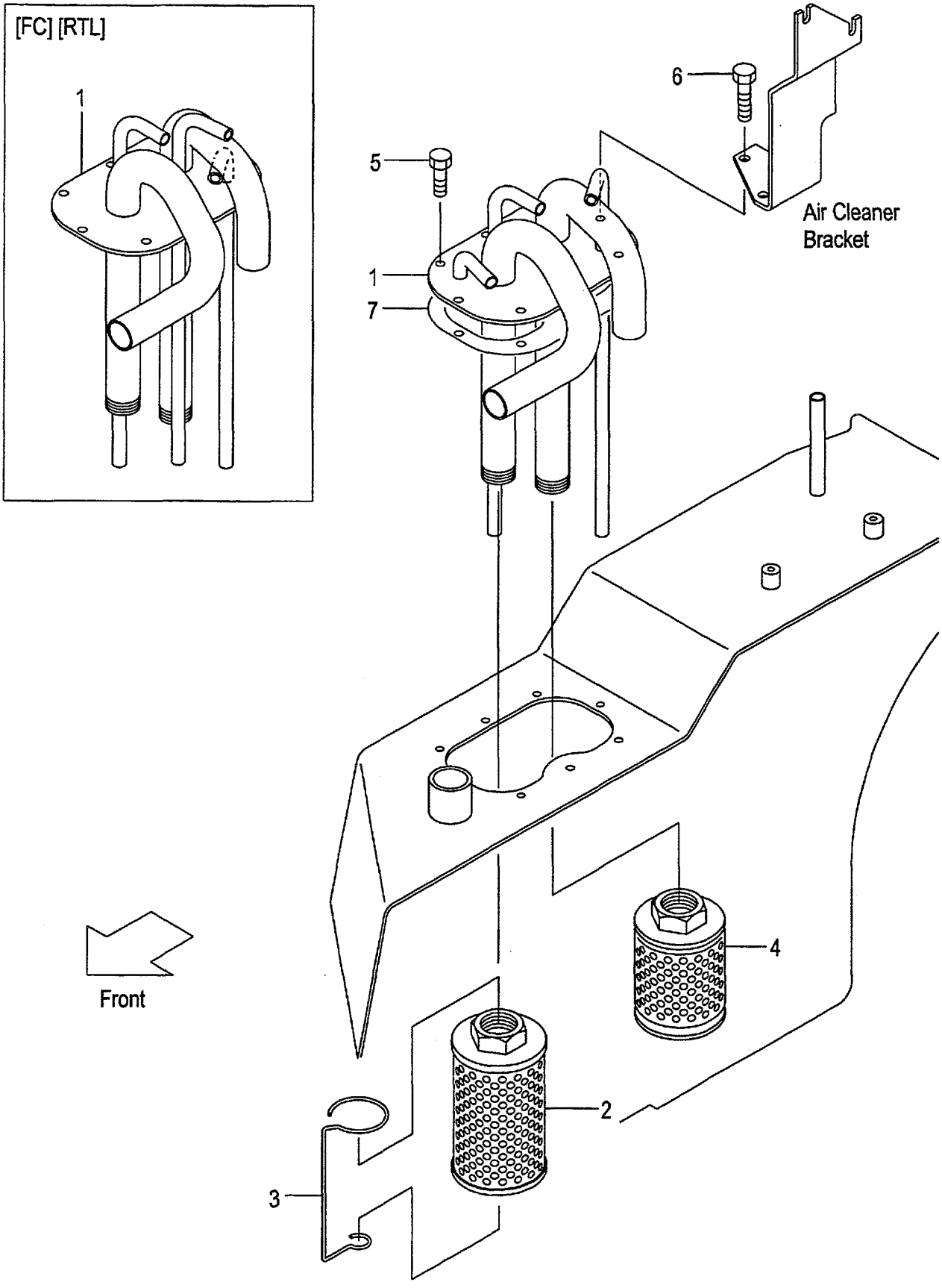

A:FG20W6H FG25W6H
B:FD20W6H FD25W6H

FIG.144
(F5H261B0)

Item No	Part No.	Mark	Description		Req'd	Remarks : Serial No.
1	239H7-52001		PIPE,SUCTION	ﾊﾟｲﾌﾟ	1	
-	538S3-72001		PIPE,SUCTION	ﾊﾟｲﾌﾟ	1	[FC][RTL]
A1	271A7-52301		FILTER-ASSY,RETURN	ﾌｨﾙﾀｱｯｾﾝ	1	INC.2,3
2	214A7-52081		FILTER,RETURN	ﾌｨﾙﾀ	1	
3	NO PART NO.	#	WIRE	ﾜｲﾔ	1	
4	216G7-52051		FILTER,SUCTION	ﾌｨﾙﾀ	1	
5	229F2-22151		BOLT	ﾎﾞﾙﾄ	6	
6	229F2-22161		BOLT	ﾎﾞﾙﾄ	2	
7	216G2-22202		PACKING	ﾊﾟｯｷﾝｸﾞ	1	

FIG.145 OIL CAP & LEVEL
(F5H261C0) オイルキャップ&レベル

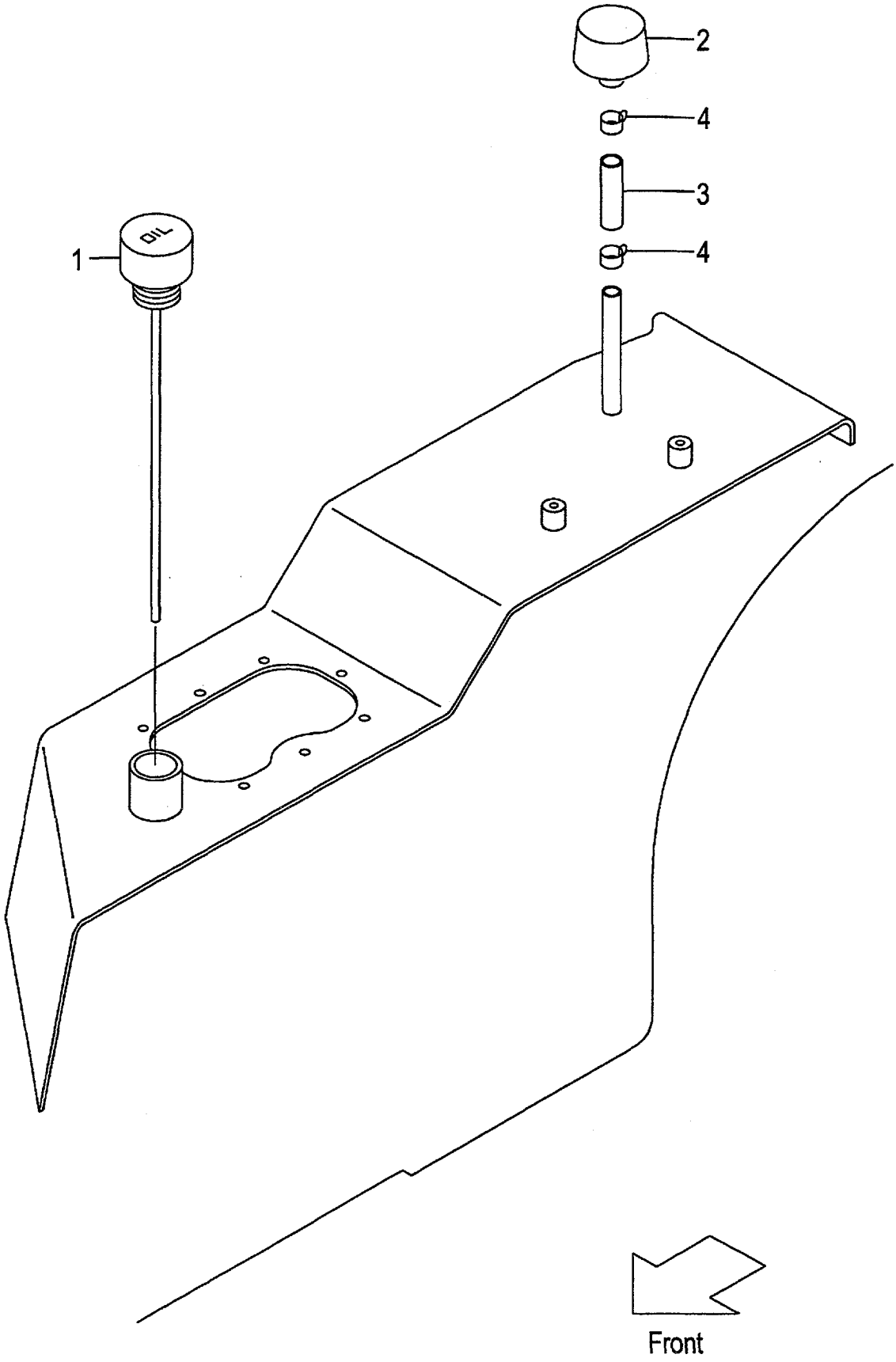

A:FG20C6H FG20T6H FG25C6H FG25T6H FG20W6H FG25W6H
B:FD20C6H FD20T6H FD25C6H FD25T6H FD20W6H FD25W6H

Item No	Part No.	Mark	Description		Req'd	Remarks : Serial No.
1	234A7-52101		CAP,OIL	ｷｬｯﾌﾟ	1	
2	216G7-52201		CAP,BREATHER	ｷｬｯﾌﾟ	1	
3	04710-04005		HOSE	ﾎｰｽ	1	
4	04914-00019		CLIP	ｸﾘｯﾌﾟ	2	

FIG.146 FUEL TANK (GASOLINE)

(F5H261D0) フューエルタンク

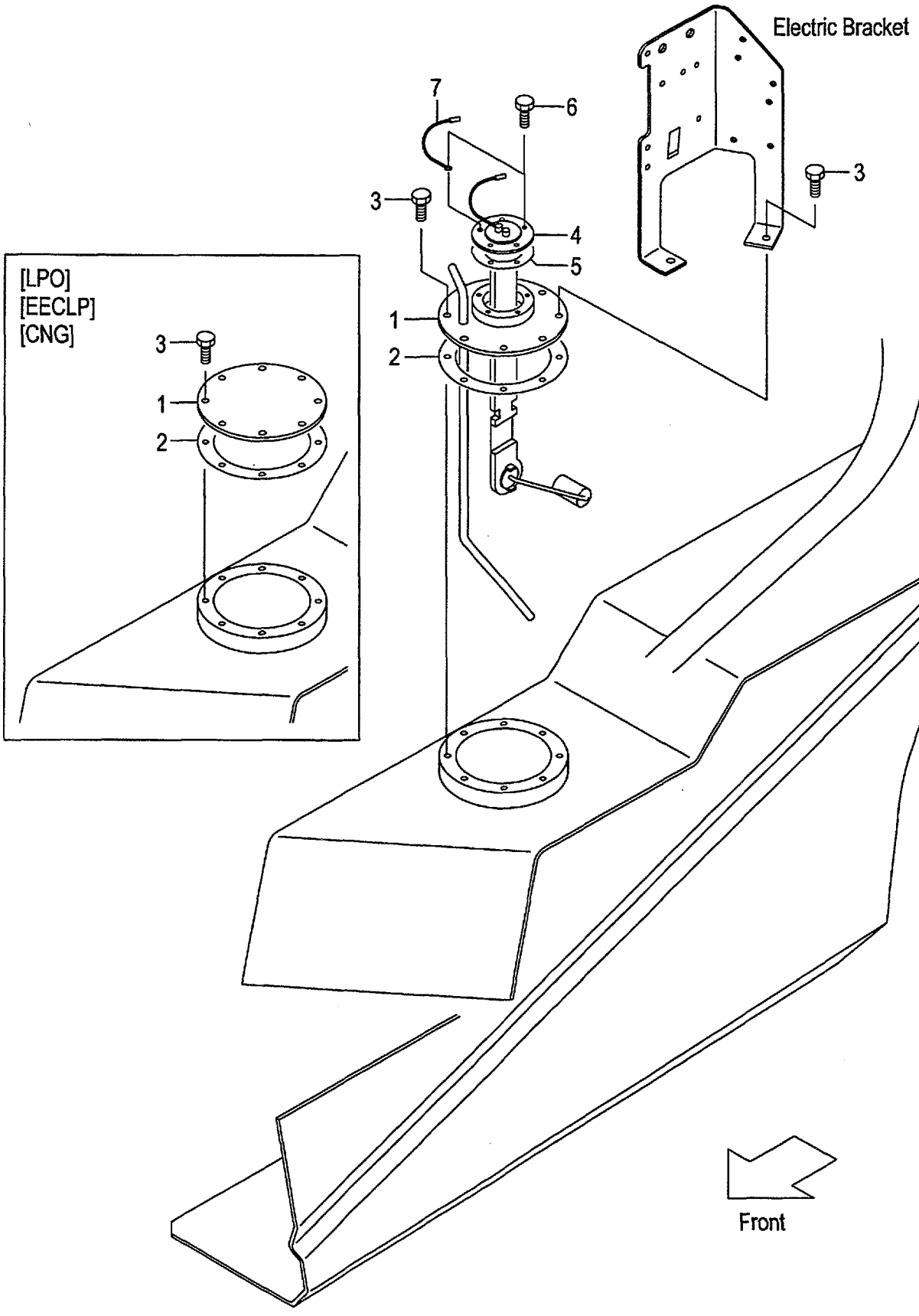

A:FG20C6H FG20T6H FG25C6H FG25T6H FG20W6H FG25W6H

Item No	Part No.	Mark	Description		Req'd	Remarks : Serial No.
1	237A2-22101		PLATE,FUEL-TOP	ﾌﾟﾚｰﾄ	1	
-	537A0-52001		PLATE,FUEL-TOP	ﾌﾟﾚｰﾄ	1	[LPO][EECLP][CNG]
2	272E7-52022		GASKET	ｶﾞｽｹｯﾄ	1	
3	01183-06016		BOLT	ﾎﾞﾙﾄ	8	
4	222A2-22061		GAUGE,FUEL	ｹﾞｰｼﾞ	1	(WITHOUT LPO,EECLP,CNG)
-	222A2-22071		GAUGE,FUEL	ｹﾞｰｼﾞ	1	[OKM]
5	229F2-22071		GASKET	ｶﾞｽｹｯﾄ	1	(WITHOUT LPO,EECLP,CNG)
6	01183-05010		BOLT	ﾎﾞﾙﾄ	5	(WITHOUT LPO,EECLP,CNG)
7	25592-42121		WIRE	ﾜｲﾔ	1	(WITHOUT LPO,EECLP,CNG)

FIG.147 FUEL TANK (DIESEL)

(F5H261E0) フューエルタンク

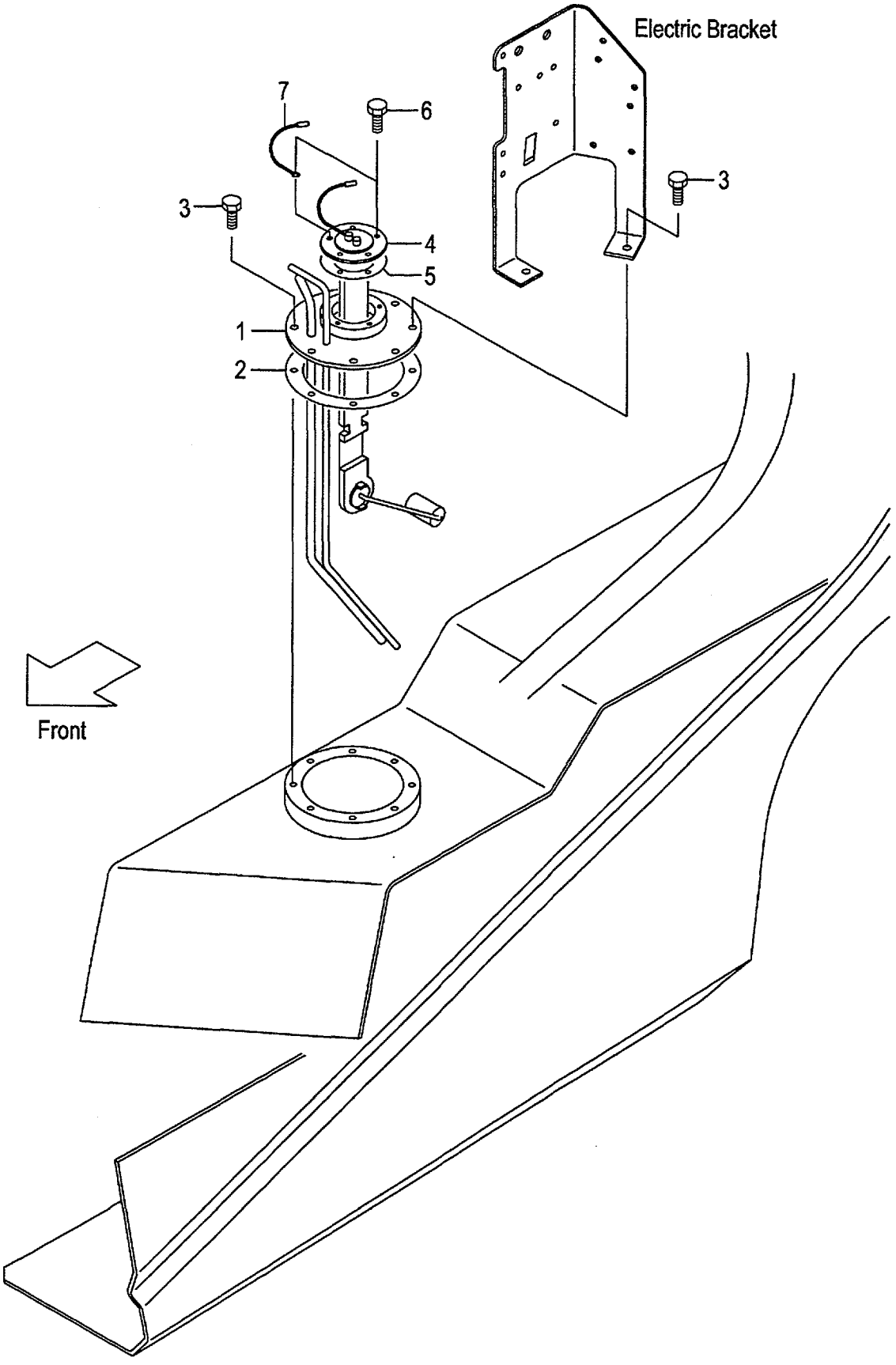

FIG.147
(F5H261E0)

A:FD20C6H FD20T6H FD25C6H FD25T6H FD20W6H FD25W6H

Item No	Part No.	Mark	Description		Req'd	Remarks : Serial No.
1	239A2-22101		PLATE,FUEL-TOP	ﾌﾟﾚｰﾄ	1	
2	272E7-52022		GASKET	ｶﾞｽｹｯﾄ	1	
3	01183-06016		BOLT	ﾎﾞﾙﾄ	8	
4	222A2-22061		GAUGE,FUEL	ｹﾞｰｼﾞ	1	
-	222A2-22071		GAUGE,FUEL	ｹﾞｰｼﾞ	1	[OKM]
5	229F2-22071		GASKET	ｶﾞｽｹｯﾄ	1	
6	01183-05010		BOLT	ﾎﾞﾙﾄ	5	
7	25592-42121		WIRE	ﾜｲﾔ	1	

FIG.148 BALANCE WEIGHT

(F5H26310) ﾊﾞﾗﾝｽｳｴｲﾄ

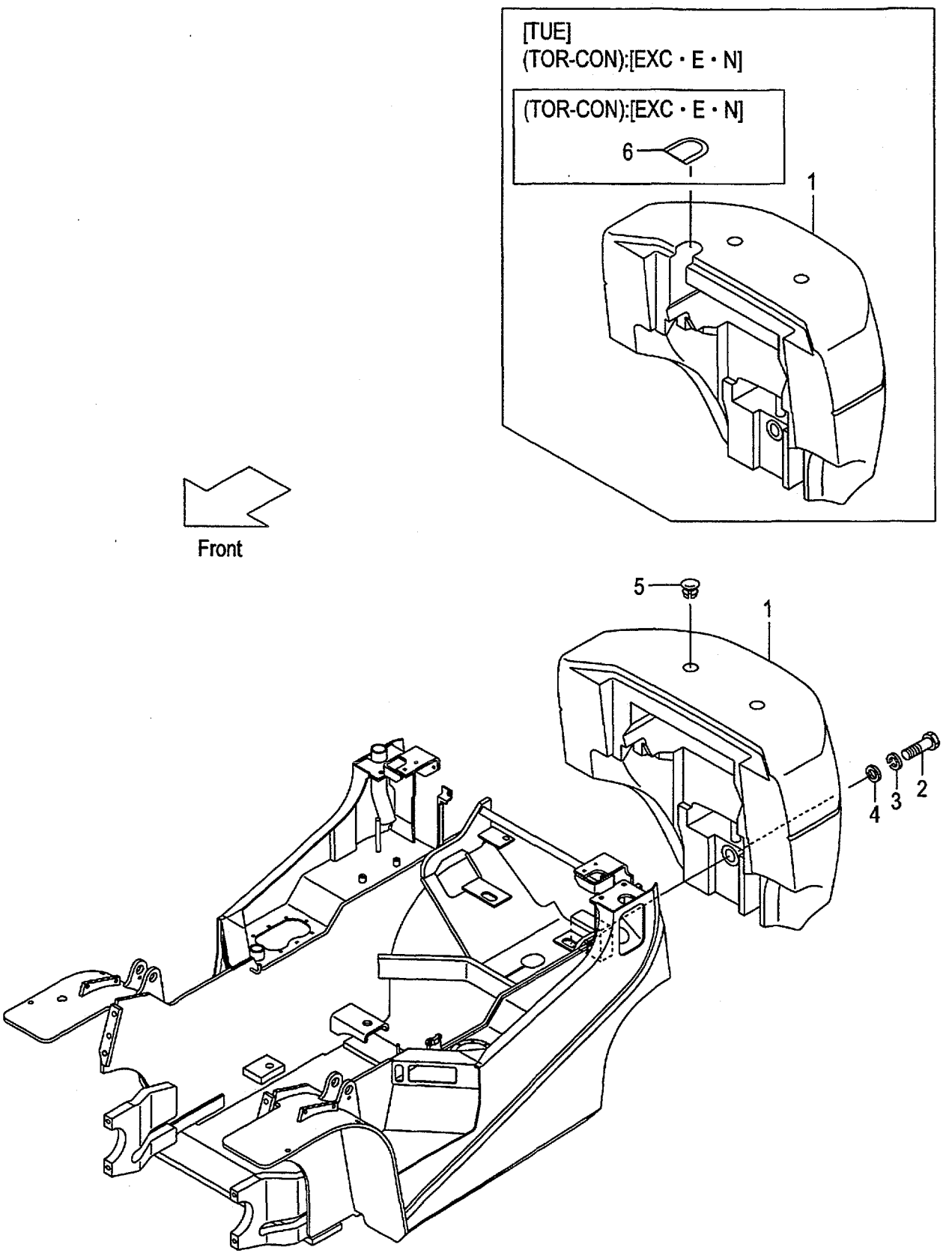

A:FG20C6H D:FG25T6H G:FD20C6H K:FD25T6H
B:FG20T6H E:FG20W6H H:FD20T6H L:FD20W6H
C:FG25C6H F:FG25W6H J:FD25C6H M:FD25W6H

FIG.148
(F5H26310)

Item No	Part No.	Mark	Description		Req'd	Remarks : Serial No.
1	NO PART NO.	#	WEIGHT,BALANCE	ｳｴｲﾄ	1	
2	01110-30150		BOLT	ﾎﾞﾙﾄ	1	
3	02010-00030		WASHER	ﾜｯｼｬ	1	
4	234A6-32001		WASHER	ﾜｯｼｬ	1	
5	216G6-32101		CAP	ｷｬｯﾌﾟ	2	
6	516G2-72051		COVER	ｶﾊﾞｰ	1	B,D,H,K [EXC][EXE][EXN]

FIG.149 BALANCE WEIGHT [RW]

(F5H26320) ﾊﾞﾗﾝｽｳｴｲﾄ

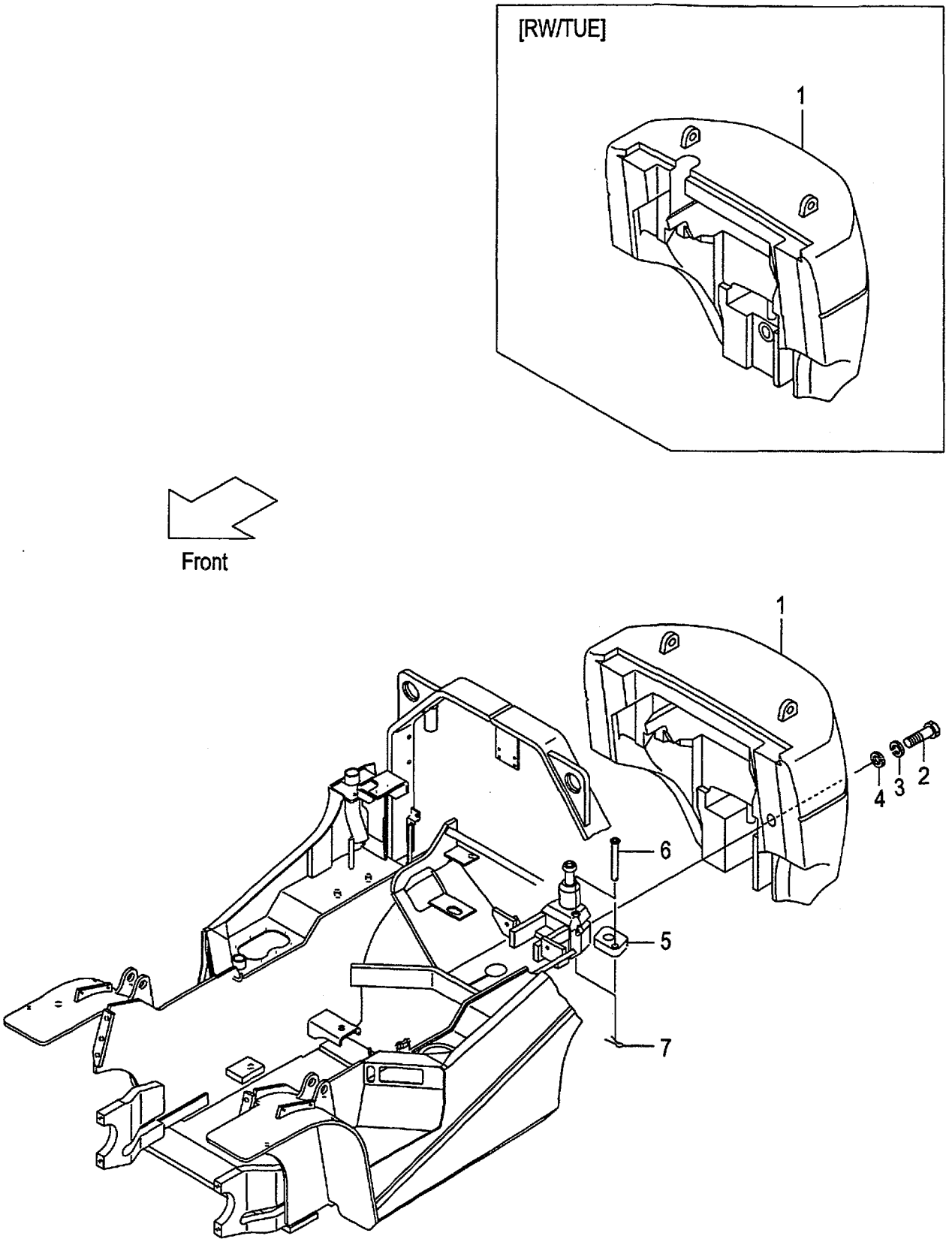

A:FG25C6H FG25T6H FG25W6H
B:FD25C6H FD25T6H FD25W6H

Item No	Part No.	Mark	Description	Req'd	Remarks : Serial No.
1	NO PART NO.	#	WEIGHT,BALANCE,2.5 ｳｴｲﾄ	1	[RW][RW/TUE]
2	01110-30090		BOLT ﾎﾞﾙﾄ	1	[RW][RW/TUE]
3	02010-00030		WASHER ﾜｯｼｬ	1	[RW][RW/TUE]
4	22216-30051		WASHER ﾜｯｼｬ	1	[RW][RW/TUE]
5	52691-92211		STOPPER ｽﾄｯﾊﾟ	1	[RW][RW/TUE]
6	52691-92221		PIN ﾋﾟﾝ	1	[RW][RW/TUE]
7	02200-04040		PIN,COTTER ﾋﾟﾝ	1	[RW][RW/TUE]

FIG.150 BALANCE WEIGHT [LPG][LPO][EECLP][CNG]

(F5H26330) ﾊﾞﾗﾝｽｳｴｲﾄ

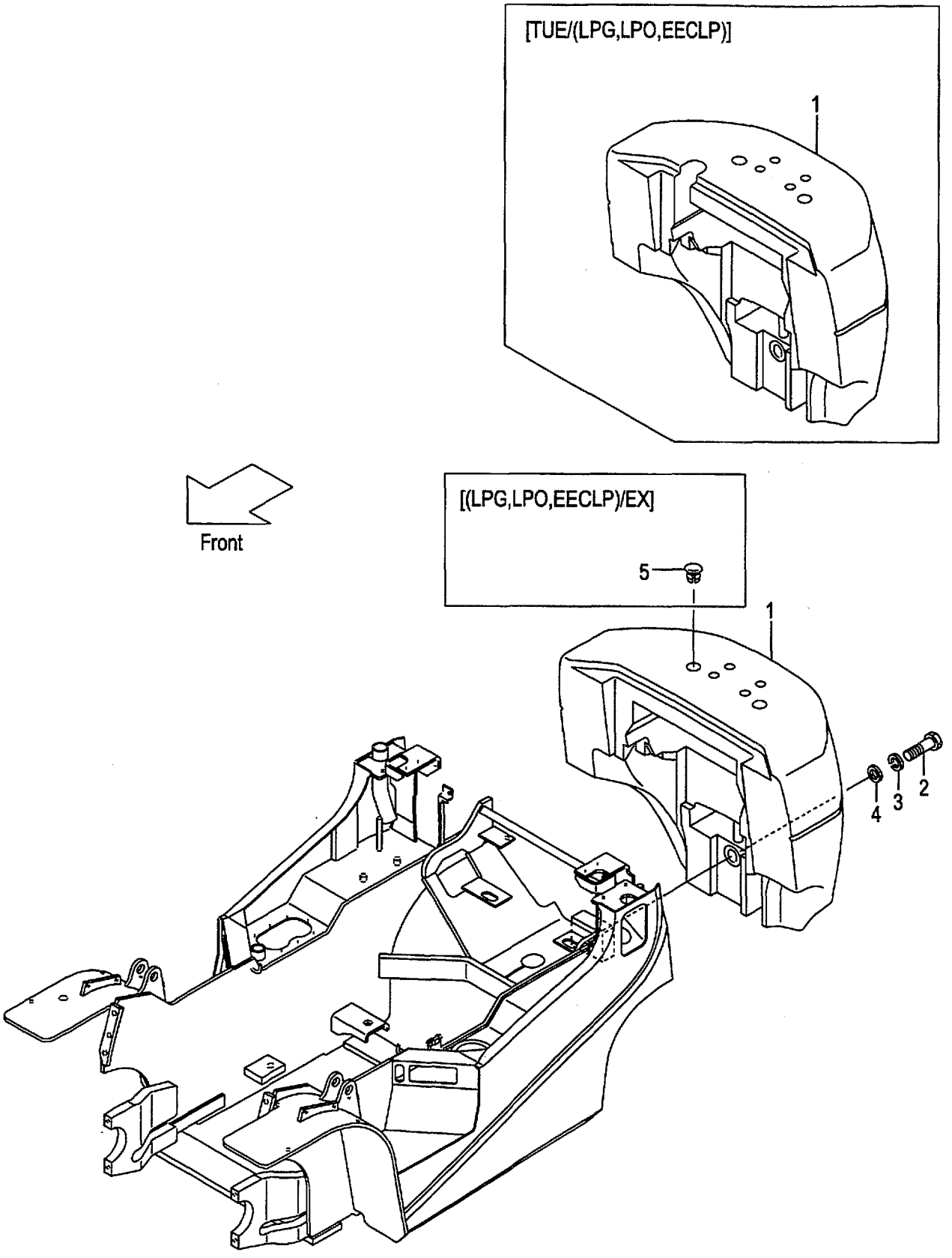

A:FG20C6H FG20T6H C:FG20W6H
B:FG25C6H FG25T6H D:FG25W6H

FIG.150
(F5H26330)

Item No	Part No.	Mark	Description		Req'd	Remarks : Serial No.
1	NO PART NO.	#	WEIGHT,BALANCE	ｳｴｲﾄ	1	[LPG][LPO][EECLP][TUE/LPG] [TUE/LPO][TUE/EECLP]
-	NO PART NO.	#	WEIGHT,BALANCE	ｳｴｲﾄ	1	A,B [LPG/EX][LPO/EX][EECLP/EX]
-	NO PART NO.	#	WEIGHT,BALANCE,2.5	ｳｴｲﾄ	1	B,D [CNG]
2	01110-30150		BOLT	ﾎﾞﾙﾄ	1	[LPG][LPO][EECLP][TUE/LPG] [TUE/LPO][TUE/EECLP]
-	01110-30150		BOLT	ﾎﾞﾙﾄ	1	A,B [LPG/EX][LPO/EX][EECLP/EX]
-	01110-30150		BOLT	ﾎﾞﾙﾄ	1	B,D [CNG]
3	02010-00030		WASHER	ﾜｯｼｬ	1	[LPG][LPO][EECLP][TUE/LPG] [TUE/LPO][TUE/EECLP]
-	02010-00030		WASHER	ﾜｯｼｬ	1	A,B [LPG/EX][LPO/EX][EECLP/EX]
-	02010-00030		WASHER	ﾜｯｼｬ	1	B,D [CNG]
4	234A6-32001		WASHER	ﾜｯｼｬ	1	[LPG][LPO][EECLP][TUE/LPG] [TUE/LPO][TUE/EECLP]
-	234A6-32001		WASHER	ﾜｯｼｬ	1	A,B [LPG/EX][LPO/EX][EECLP/EX]
-	234A6-32001		WASHER	ﾜｯｼｬ	1	B,D [CNG]
5	216G6-32101		CAP	ｷｬｯﾌﾟ	2	A,B [LPG/EX][LPO/EX][EECLP/EX]

FIG.151 BALANCE WEIGHT [HC]

(F5H26340) ﾊﾞﾗﾝｽｳｴｲﾄ

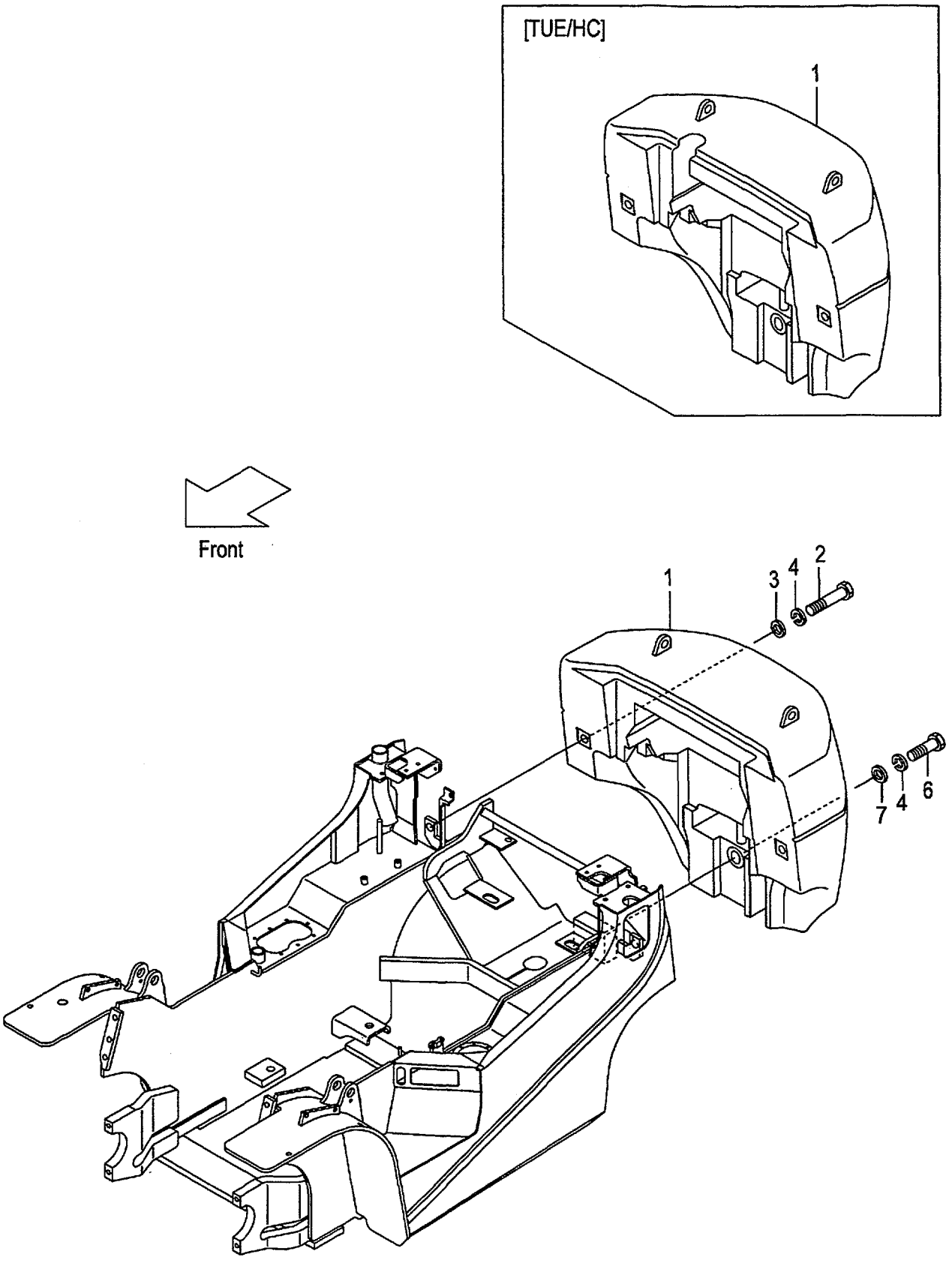

A:FG20C6H FG20T6H FG20W6H C:FD20C6H FD20T6H FD20W6H
B:FG25C6H FG25T6H FG25W6H D:FD25C6H FD25T6H FD25W6H

Item No	Part No.	Mark	Description		Req'd	Remarks : Serial No.
1	NO PART NO.	#	WEIGHT,BALANCE	ｳｴｲﾄ	1	[HC][TUE/HC]
2	01113-30230		BOLT	ﾎﾞﾙﾄ	2	A,C [HC][TUE/HC]
-	01113-30300		BOLT	ﾎﾞﾙﾄ	2	B,D [HC][TUE/HC]
3	225R6-32001		WASHER	ﾜｯｼｬ	2	[HC][TUE/HC]
4	02010-00030		WASHER	ﾜｯｼｬ	3	[HC][TUE/HC]
5	225R9-12101	+	DECAL,HOOK-CAUTION	ﾃﾞｶﾙ	1	[HC][TUE/HC]
6	01110-30150		BOLT	ﾎﾞﾙﾄ	1	[HC][TUE/HC]
7	234A6-32001		WASHER	ﾜｯｼｬ	1	[HC][TUE/HC]

FIG.152 FRONT GUARD

(F5H26410) ﾌﾛﾝﾄｶﾞｰﾄﾞ

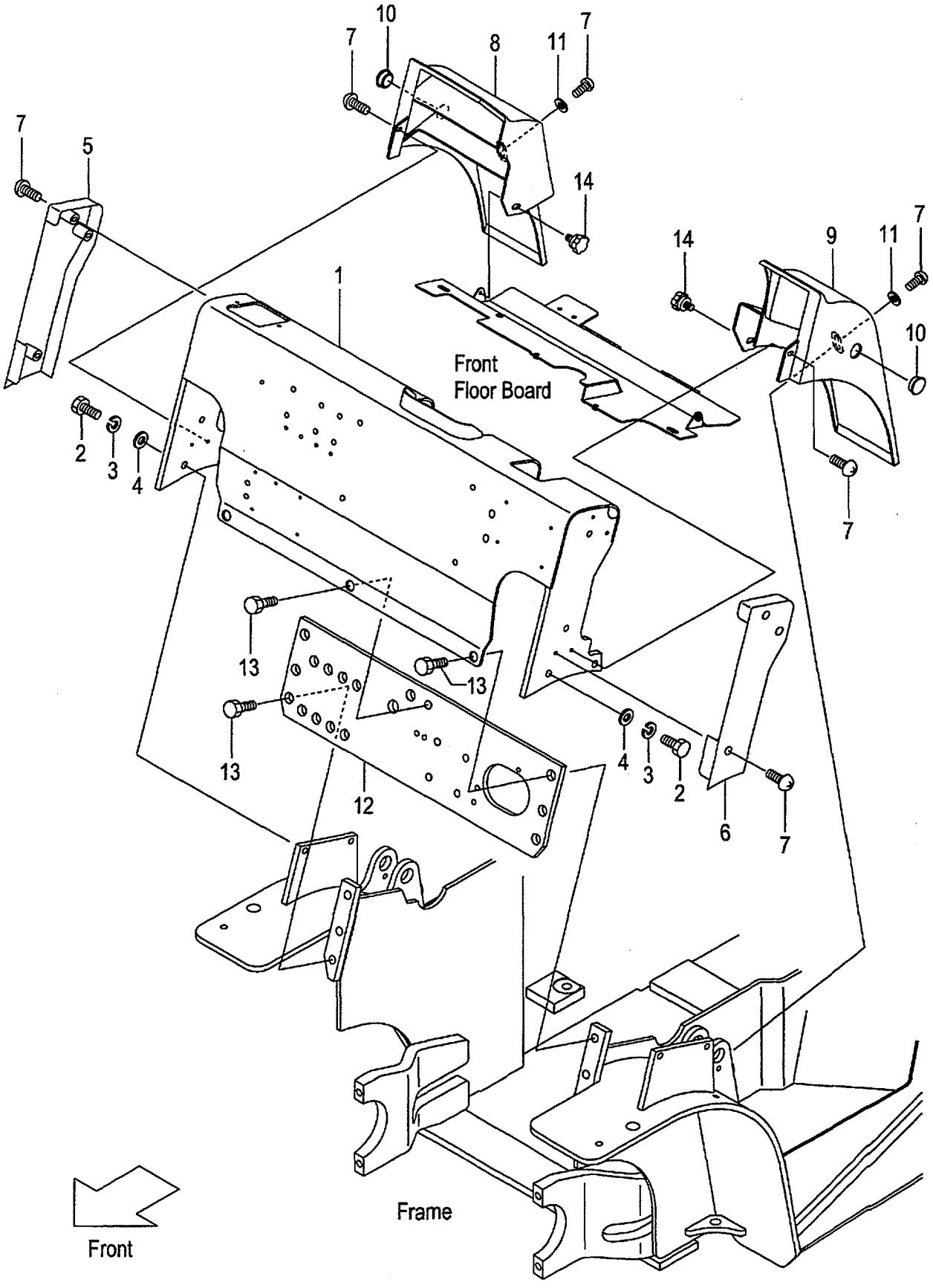

A:FG20C6H FG25C6H D:FD20C6H FD25C6H
B:FG20T6H FG25T6H E:FD20T6H FD25T6H
C:FG20W6H FG25W6H F:FD20W6H FD25W6H

FIG.152
(F5H26410)

Item No	Part No.	Mark	Description		Req'd	Remarks : Serial No.
1	239A6-40201		GUARD,FRONT	ｶﾞｰﾄﾞ	1	
-	539A2-60601		GUARD,FRONT	ｶﾞｰﾄﾞ	1	B,E [EXN]
2	01186-12030		BOLT	ﾎﾞﾙﾄ	4	
-	01109-12030		BOLT,STAINLESS	ﾎﾞﾙﾄ	4	[FC]
3	02013-00012		WASHER	ﾜｯｼｬ	4	[FC]
4	02001-00012		WASHER	ﾜｯｼｬ	4	[FC]
5	239A6-43001		COVER,SIDE,RH	ｶﾊﾞｰ	1	
6	239A6-43011		COVER,SIDE,LH	ｶﾊﾞｰ	1	
7	214A6-42252		SCREW	ｽｸﾘｭ	10	
8	239A6-43101		COVER,TILT-CYL,RH	ｶﾊﾞｰ	1	
9	239A6-43111		COVER,TILT-CYL,LH	ｶﾊﾞｰ	1	
10	514A5-12701		PLUG,HOLE	ﾌﾟﾗｸﾞ	2	
11	02000-20010		WASHER	ﾜｯｼｬ	2	
12	239A6-42001		PLATE,FRONT	ﾌﾟﾚｰﾄ	1	
13	216G6-43561		BOLT,FLANGE	ﾎﾞﾙﾄ	7	
14	256C5-12671		BOLT,KNOB	ﾎﾞﾙﾄ	2	

FIG.153 BONNET

(F5H26420) ﾎﾞﾝﾈｯﾄ

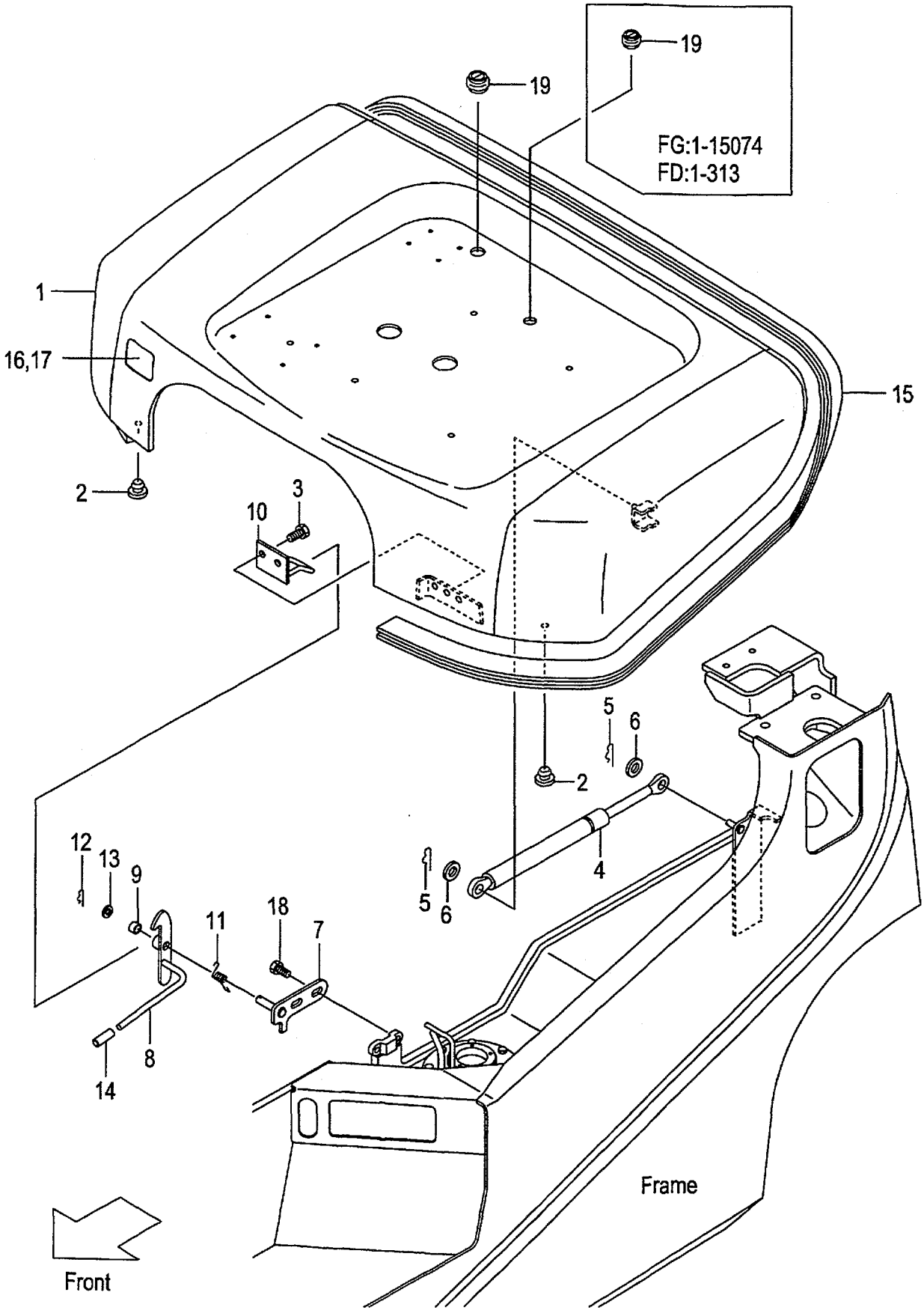

A:FG20C6H FG20T6H FG20W6H C:FD20C6H FD20T6H FD20W6H
B:FG25C6H FG25T6H FG25W6H D:FD25C6H FD25T6H FD25W6H

Item No	Part No.	Mark	Description		Req'd	Remarks : Serial No.
1	209P6-40301		BONNET	ﾎﾞﾝﾈｯﾄ	1	A,B:1-15028 C,D:1-196
-	239A6-40501		BONNET	ﾎﾞﾝﾈｯﾄ	1	A,B:15029-15074 C,D:197-313
-	239A6-40502		BONNET	ﾎﾞﾝﾈｯﾄ	1	A,B:15075- C,D:314-
-	239A5-30601		BONNET	ﾎﾞﾝﾈｯﾄ	1	A,B:1-15074 C,D:1-313 [SCB001][SCBCR]
-	539A5-30602		BONNET	ﾎﾞﾝﾈｯﾄ	1	A,B:15075- C,D:314- [SCB001][SCBCR]
-	539C1-90401		BONNET	ﾎﾞﾝﾈｯﾄ	1	B:1-15074 D:1-313 [RW]
-	539C1-90402		BONNET	ﾎﾞﾝﾈｯﾄ	1	B:15075- D:314- [RW]
-	539C1-90401		BONNET	ﾎﾞﾝﾈｯﾄ	1	B:1-15074 [CNG]
-	539C1-90402		BONNET	ﾎﾞﾝﾈｯﾄ	1	B:15075- [CNG]
2	23456-42181		STOPPER,BONNET	ｽﾄｯﾊﾟ	2	
3	01183-08016		BOLT	ﾎﾞﾙﾄ	2	
4	535C2-60401		SPRING,GAS	ｽﾌﾟﾘﾝｸﾞ	1	
-	539A9-92201		SPRING,GAS	ｽﾌﾟﾘﾝｸﾞ	1	A,B:15075- C,D:314- [RRE]
5	216H3-92171		PIN,SNAP	ﾋﾟﾝ	2	
6	02000-00008		WASHER	ﾜｯｼｬ	2	
A1	218G6-40521		CATCH-ASSY,BONNET	ﾎﾞﾝﾈｯﾄｷｬｯﾁｱｯｾﾝ	1	INC.7-13
7	218G6-42451		BRACKET	ﾌﾞﾗｹｯﾄ	1	
8	218G6-42471		LATCH	ﾗｯﾁ	1	
9	23655-22101		BUSHING	ﾌﾞｯｼﾝｸﾞ	1	
10	216G6-42451		HOOK	ﾌｯｸ	1	
11	216G6-42481		SPRING	ｽﾌﾟﾘﾝｸﾞ	1	
12	216H5-42141		PIN,SNAP	ﾋﾟﾝ	1	
13	02000-00010		WASHER	ﾜｯｼｬ	1	
14	216G6-52291		CAP	ｷｬｯﾌﾟ	1	
15	209P6-42841		RUBBER,SEAL,BONNET	ﾗﾊﾞｰ	1	
16	209P6-40401		INSULATOR	ｲﾝｼｭﾚｰﾀ	1	
17	216G6-42541		CLIP	ｸﾘｯﾌﾟ	10	
18	01185-08020		BOLT	ﾎﾞﾙﾄ	2	
19	27662-63041		GROMMET	ｸﾞﾛﾒｯﾄ	1	A,B:1-15074 C,D:1-313
-	27662-62711		GROMMET	ｸﾞﾛﾒｯﾄ	1	A,B:15075- C,D:314-

FIG.154 RADIATOR COVER

(F5H26430) ﾗｼﾞｴｰﾀｶﾊﾞｰ

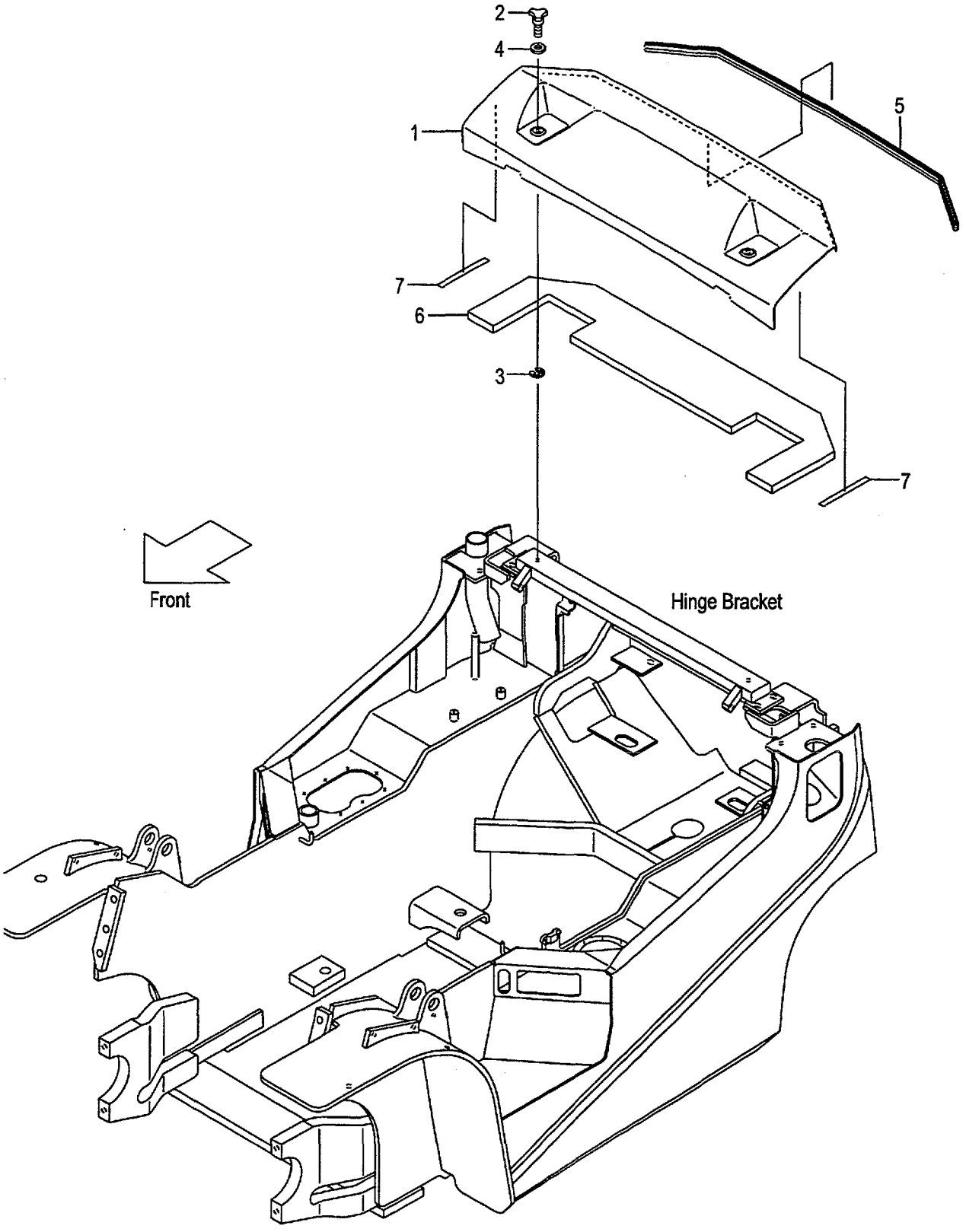

A:FG20C6H FG25C6H D:FD20C6H FD25C6H
B:FG20T6H FG25T6H E:FD20T6H FD25T6H
C:FG20W6H FG25W6H F:FD20W6H FD25W6H

FIG.154
(F5H26430)

Item No	Part No.	Mark	Description	Req'd	Remarks : Serial No.
1	239A6-40301		COVER,RADIATOR カバー	1	
-	539A5-42351		COVER,RADIATOR カバー	1	[AW061]
2	222A6-42451		BOLT,KNOB ボルト	2	
-	01181-08016		BOLT ボルト	2	B,E [EXE][EXN]
3	222A6-42461		E-RING Eリング	2	
4	02000-00008		WASHER ワッシャ	2	
5	214A6-42121		RUBBER,SEAL ラバー	1	
6	239A6-42291		RUBBER,RADIATOR-COVER ラバー	1	
7	234A6-43121		RUBBER ラバー	2	

FIG.155 RADIATOR COVER [RW]

(F5H26440) ﾗｼﾞｴｰﾀｶﾊﾞｰ

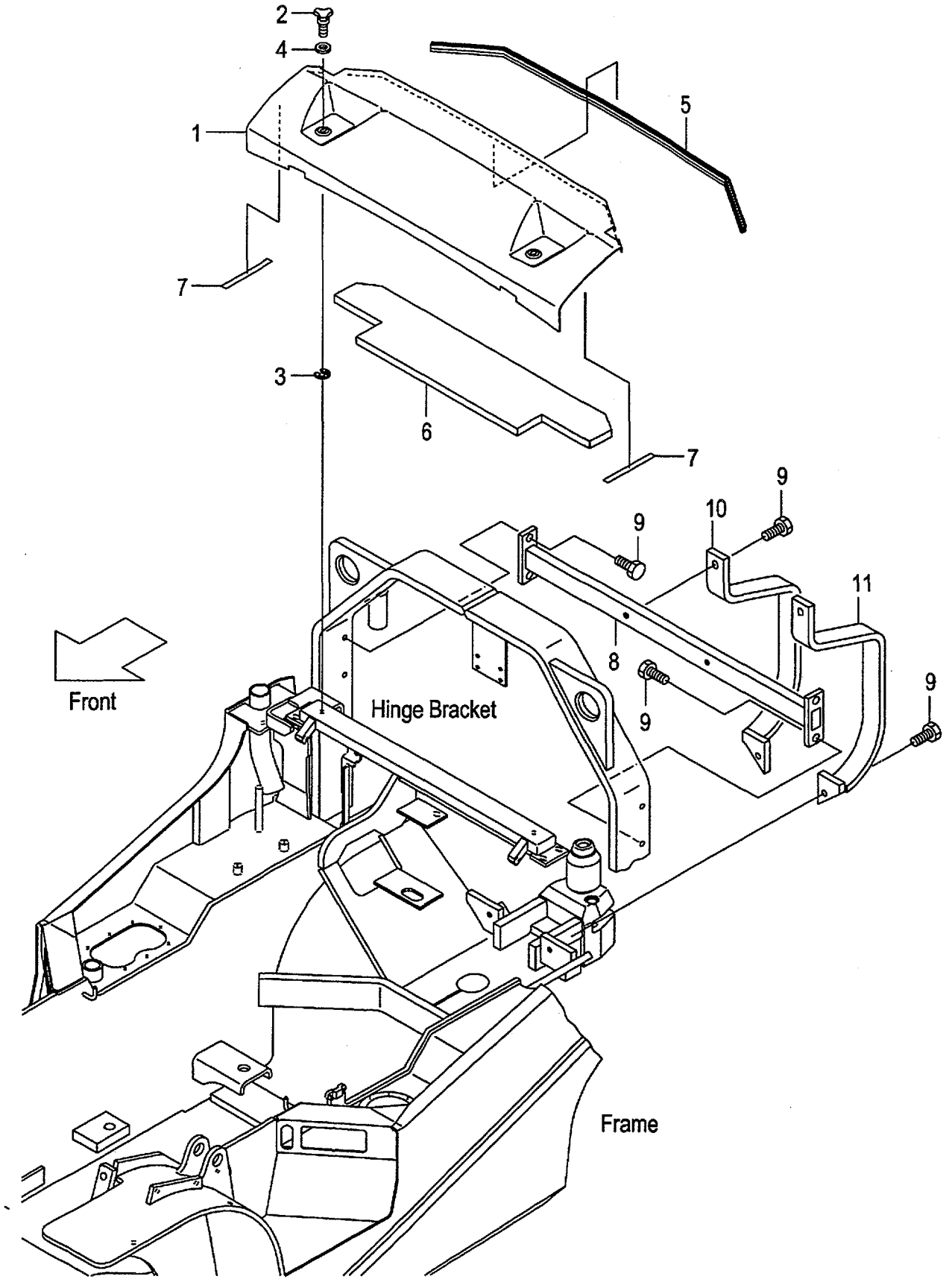

A:FG25C6H FG25T6H FG25W6H
B:FD25C6H FD25T6H FD25W6H

FIG.155
(F5H26440)

Item No	Part No.	Mark	Description	Req'd	Remarks : Serial No.
1	539C1-92301		COVER,RADIATOR カバー	1	[RW]
2	222A6-42451		BOLT,KNOB ボルト	2	[RW]
3	222A6-42461		E-RING Eリング	2	[RW]
4	02000-00008		WASHER ワッシャ	2	[RW]
5	214A6-42121		RUBBER,SEAL ラバー	1	[RW]
6	539C1-92311		RUBBER,RADIATOR-COVER ラバー	1	[RW]
7	234A6-43121		RUBBER ラバー	2	[RW]
8	539C1-92401		BAR,TIE バー	1	[RW]
9	01186-12035		BOLT ボルト	8	[RW]
10	539C1-92541		GUARD,MUFFLER,RH ガード	1	[RW]
11	539C1-92551		GUARD,MUFFLER,LH ガード	1	[RW]

FIG.156 RADIATOR COVER [LPG][LPO][EECLP][CNG]

(F5H26450) ﾗｼﾞｴｰﾀｶﾊﾞｰ

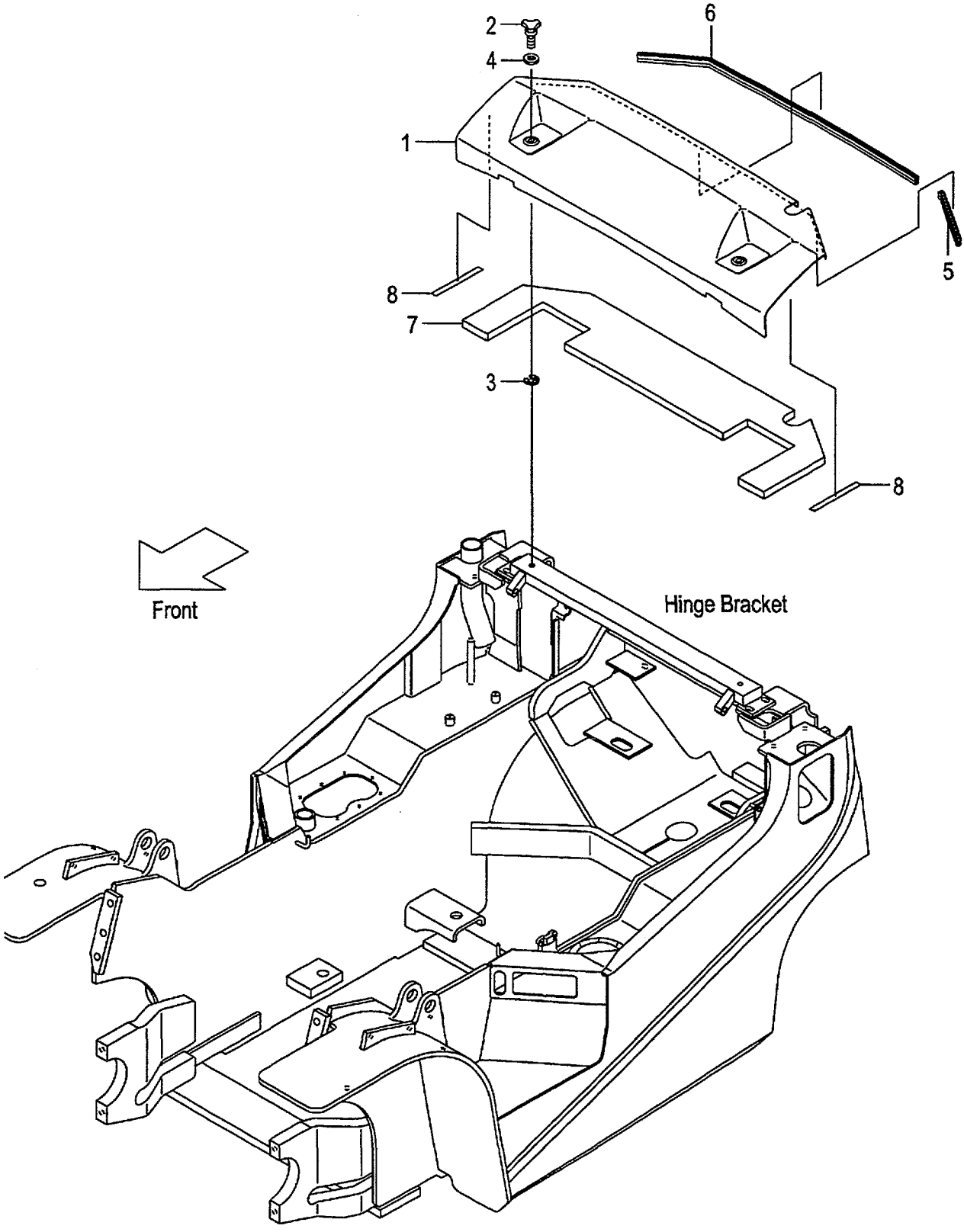

A:FG20C6H FG20T6H FG20W6H
B:FG25C6H FG25T6H FG25W6H

FIG.156
(F5H26450)

Item No	Part No.	Mark	Description	Req'd	Remarks : Serial No.
1	537A0-52501		COVER,RADIATOR カバー	1	[LPG][LPO][EECLP]
-	537A0-52501		COVER,RADIATOR カバー	1	B [CNG]
2	222A6-42451		BOLT,KNOB ボルト	2	[LPG][LPO][EECLP]
-	222A6-42451		BOLT,KNOB ボルト	2	B [CNG]
3	222A6-42461		E-RING Eリング	2	[LPG][LPO][EECLP]
-	222A6-42461		E-RING Eリング	2	B [CNG]
4	02000-00008		WASHER ワッシャ	2	[LPG][LPO][EECLP]
-	02000-00008		WASHER ワッシャ	2	B [CNG]
5	537A0-52521		RUBBER,SEAL ラバー	1	[LPG][LPO][EECLP]
-	537A0-52521		RUBBER,SEAL ラバー	1	B [CNG]
6	537A0-52531		RUBBER,SEAL ラバー	1	[LPG][LPO][EECLP]
-	537A0-52531		RUBBER,SEAL ラバー	1	B [CNG]
7	537A0-52511		RUBBER,RADIATOR-COVER ラバー	1	[LPG][LPO][EECLP]
-	537A0-52511		RUBBER,RADIATOR-COVER ラバー	1	B [CNG]
8	234A6-43121		RUBBER ラバー	2	[LPG][LPO][EECLP]
-	234A6-43121		RUBBER ラバー	2	B [CNG]

FIG.157 RADIATOR COVER [SCB001][SCBCR]

(F5H26460) ﾗｼﾞｴｰﾀｶﾊﾞｰ

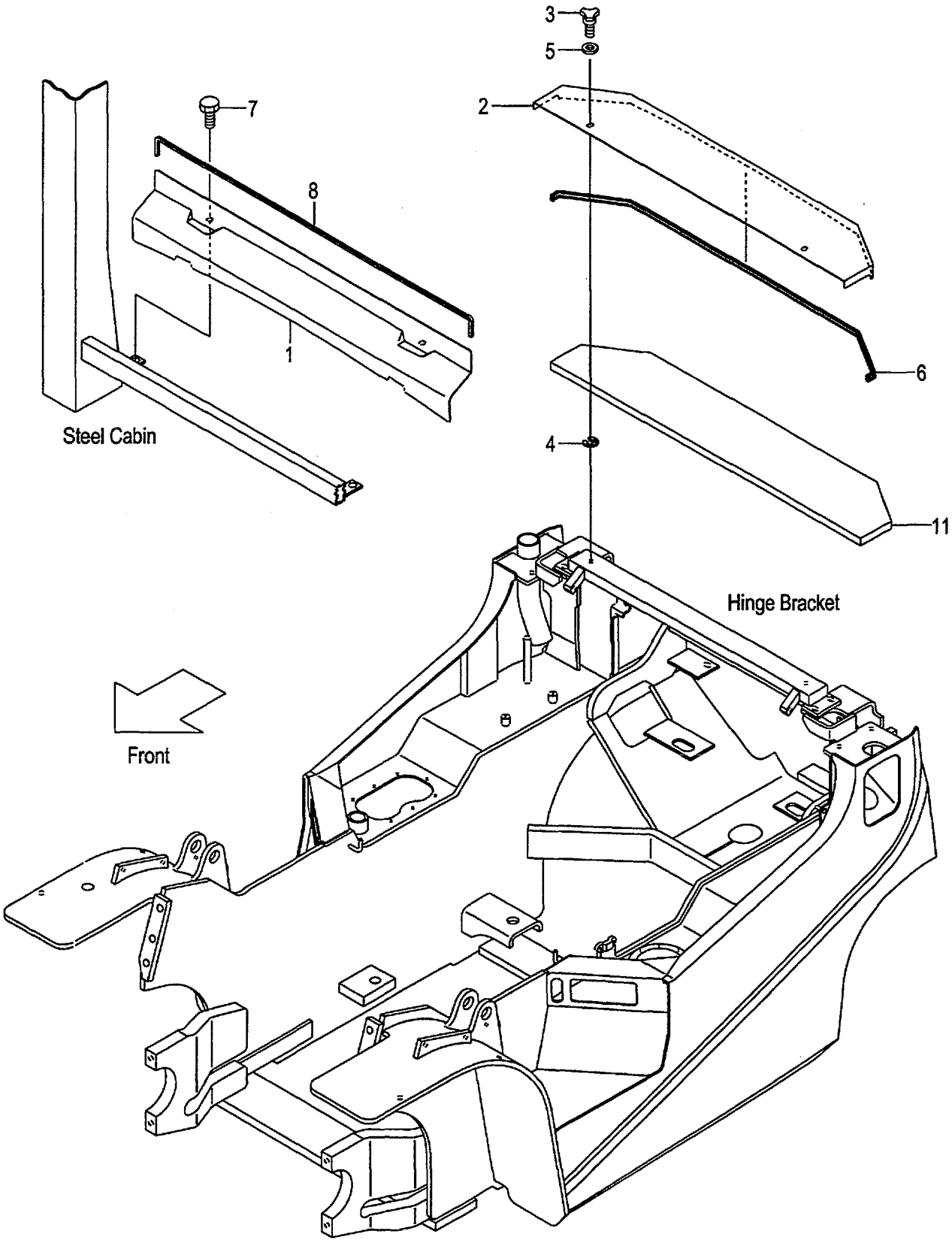

A:FG20C6H FG20T6H FG25C6H FG25T6H FG20W6H FG25W6H
B:FD20C6H FD20T6H FD25C6H FD25T6H FD20W6H FD25W6H

Item No	Part No.	Mark	Description	Req'd	Remarks : Serial No.
1	539A5-32311		COVER,RADIATOR,FRONT カバー	1	[SCB001][SCBCR]
2	539A5-32201		COVER,RADIATOR,REAR カバー	1	[SCB001]
-	539A7-62201		COVER,RADIATOR,REAR カバー	1	[SCBCR]
3	222A6-42451		BOLT,KNOB ボルト	2	[SCB001][SCBCR]
4	222A6-42461		E-RING Eリング	2	[SCB001][SCBCR]
5	02000-00008		WASHER ワッシャ	2	[SCB001][SCBCR]
6	214T6-42091		RUBBER,SEAL ラバー	1	[SCB001][SCBCR]
7	01185-08020		BOLT ボルト	2	[SCB001][SCBCR]
8	25816-42761		RUBBER,SEAL ラバー	1	[SCB001][SCBCR]
9	534A5-32651	+	WIRE,LEAD,KEY-SWITCH ワイヤ	1	[SCB001][SCBCR]
10	229F2-42141	+	WIRE-HARNESS,R-COMBINATION ワイヤハーネス	1	[SCB001][SCBCR]
11	539A5-32541		RUBBER,RADIATOR-COVER ラバー	1	[SCB001][SCBCR]

FIG.158 BONNET HINGE

(F5H26470) ﾎﾞﾝﾈｯﾄﾋﾝｼﾞ

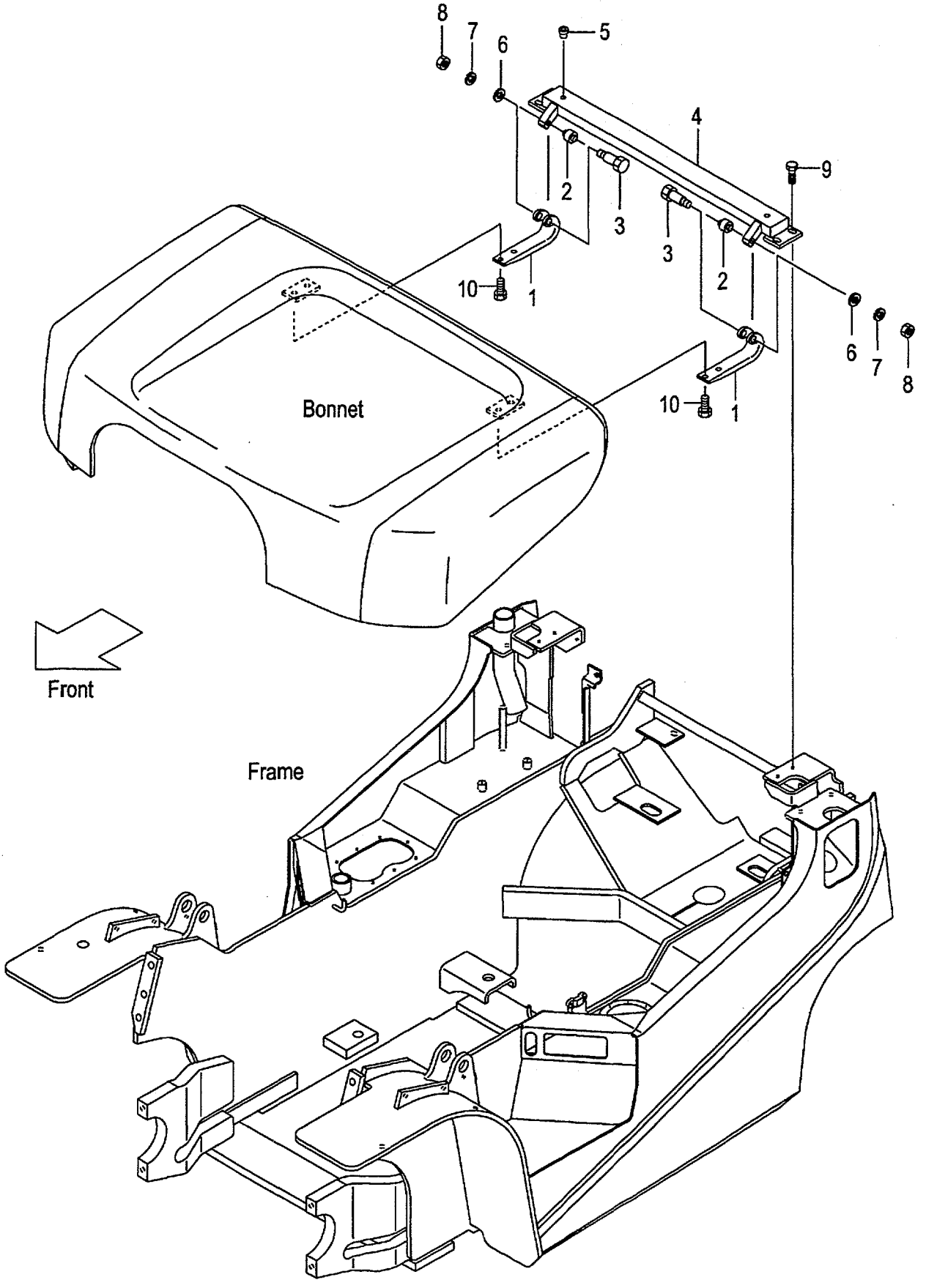

A:FG20C6H FG20T6H FG25C6H FG25T6H C:FD20C6H FD20T6H FD25C6H FD25T6H
B:FG20W6H FG25W6H D:FD20W6H FD25W6H

Item No	Part No.	Mark	Description		Req'd	Remarks : Serial No.
1	216G6-42911		HINGE	ﾋﾝｼﾞ	2	
2	216G6-43601		BUSHING	ﾌﾞｯｼﾝｸﾞ	2	
3	216G6-42931		BOLT	ﾎﾞﾙﾄ	2	
4	218G6-42301		BRACKET,HINGE	ﾌﾞﾗｹｯﾄ	1	
-	539H6-52201		BRACKET,HINGE	ﾌﾞﾗｹｯﾄ	1	B,D [DSR006][DSR008]
5	514A5-12011		RIVET,POP	ﾘﾍﾞｯﾄ	2	
6	02000-00006		WASHER	ﾜｯｼｬ	2	
7	02010-00006		WASHER	ﾜｯｼｬ	2	
8	01400-00006		NUT	ﾅｯﾄ	2	
9	01186-10020		BOLT	ﾎﾞﾙﾄ	4	
10	01183-08016		BOLT	ﾎﾞﾙﾄ	4	

FIG.159 FLOOR BOARD

(F5H26480) ﾌﾛｱﾎﾞｰﾄﾞ

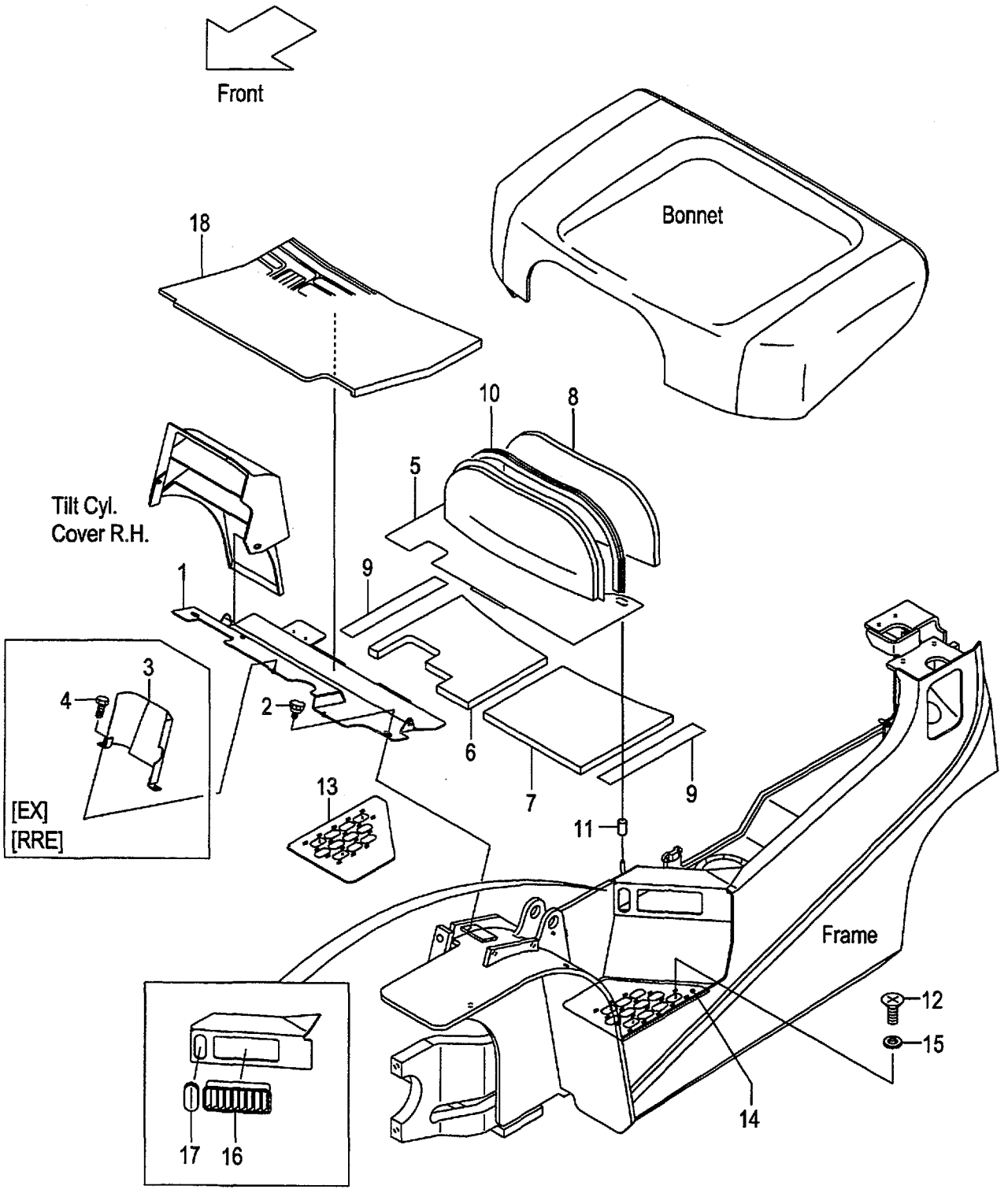

A:FG20C6H FG25C6H D:FD20C6H FD25C6H
B:FG20T6H FG25T6H E:FD20T6H FD25T6H
C:FG20W6H FG25W6H F:FD20W6H FD25W6H

FIG.159
(F5H26480)

Item No	Part No.	Mark	Description		Req'd	Remarks : Serial No.
1	239A6-50112		BOARD,FLOOR,FRONT	ﾎﾞｰﾄﾞ	1	
2	256C5-12671		BOLT,KNOB	ﾎﾞﾙﾄ	2	
3	239A6-52601		COVER,FRONT	ｶﾊﾞｰ	1	A,D [EX]
-	239A6-52601		COVER,FRONT	ｶﾊﾞｰ	1	A,C,D,F [RRE]
-	239B6-52601		COVER,FRONT	ｶﾊﾞｰ	1	B,E [EX][RRE]
4	01186-06012		BOLT	ﾎﾞﾙﾄ	2	A,B,D,E [EX]
-	01186-06012		BOLT	ﾎﾞﾙﾄ	2	[RRE]
5	239A6-50302		BOARD,FLOOR,REAR	ﾎﾞｰﾄﾞ	1	A,C,D,F
-	239B6-50302		BOARD,FLOOR,REAR	ﾎﾞｰﾄﾞ	1	B,E
6	239A6-52131		INSULATOR,REAR,RH	ｲﾝｼｭﾚｰﾀ	1	
7	239A6-52141		INSULATOR,REAR,LH	ｲﾝｼｭﾚｰﾀ	1	
8	216G6-52231		INSULATOR,REAR	ｲﾝｼｭﾚｰﾀ	1	
9	239A6-52171		RUBBER,SEAL	ﾗﾊﾞｰ	2	
10	216G6-52271		EDGING	ｴｯｼﾞﾝｸﾞ	1	
11	216G6-52291		CAP	ｷｬｯﾌﾟ	2	
12	214A6-42911		SCREW	ｽｸﾘｭ	6	
13	234A6-42042		STEP,NON-SKID,RH	ｽﾃｯﾌﾟ	1	
14	234A6-42072		STEP,NON-SKID,LH	ｽﾃｯﾌﾟ	1	
15	02000-20010		WASHER	ﾜｯｼｬ	6	
16	230C1-02041		COVER,AIR-INTAKE	ｶﾊﾞｰ	2	
17	209P7-42161		BOOT,LEVER	ﾌﾞｰﾂ	1	
18	239A6-52221		MAT,FLOOR	ﾏｯﾄ	1	A,C,D,F
-	239B6-52221		MAT,FLOOR	ﾏｯﾄ	1	B,E

FIG.160 TRAY
(F5H26490) トレー

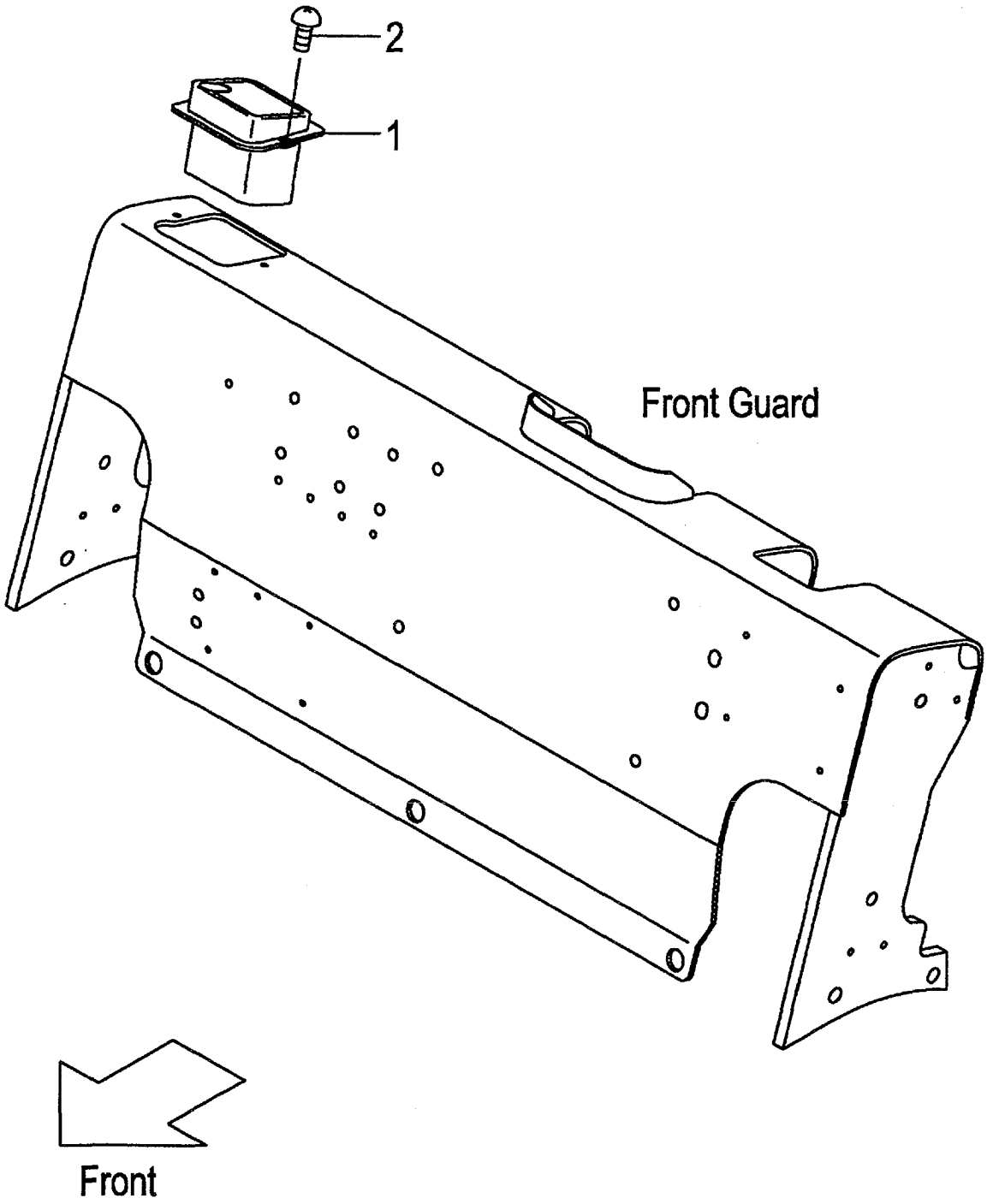

FIG.160
(F5H26490)

A:FG20C6H FG20T6H FG25C6H FG25T6H FG20W6H FG25W6H
B:FD20C6H FD20T6H FD25C6H FD25T6H FD20W6H FD25W6H

Item No	Part No.	Mark	Description		Req'd	Remarks : Serial No.
1	216G9-32001		TRAY	ﾄﾚｰ	1	
2	214A6-42252		SCREW	ｽｸﾘｭ	2	

TRAY [AW061][AW071][RWL][LPG][LPO] [BB SW][BBASW]

FIG.161

(F5H264A0) トレー

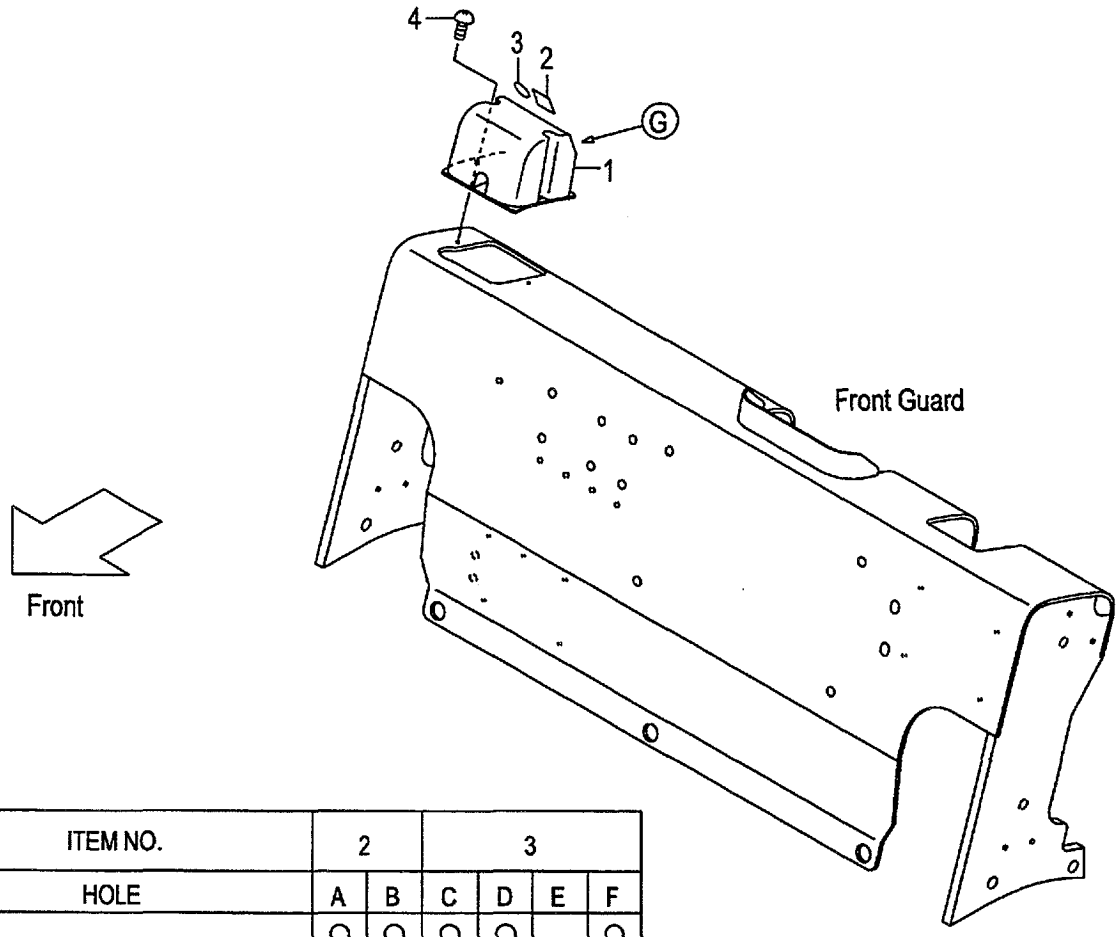

ITEM NO.		2		3			
HOLE		A	B	C	D	E	F
OPTION	[AW]	○	○	○	○		○
	[RWL]	○		○	○	○	
	[LPG]		○	○		○	○
	[BB SW][BBASW]	○	○	○	○		○
	[AW/RWL]	○		○	○		
	[AW/LPG]		○	○			○
	[AW/BB SW·BBASW]	○	○		○		○
	[RWL/BB SW·BBASW]	○		○	○		
	[AW/RWL/BB SW·BBASW]	○			○		

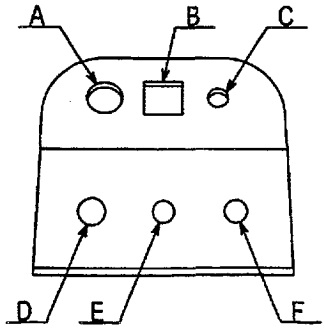

View from G

A:FG20C6H FG20T6H FG25C6H FG25T6H FG20W6H FG25W6H
B:FD20C6H FD20T6H FD25C6H FD25T6H FD20W6H FD25W6H

Item No	Part No.	Mark	Description		Req'd	Remarks : Serial No.
1	516G1-42251		BOX,SWITCH	ﾎﾞｯｸｽ	1	[AW061][AW071][RWL][BB SW] [BBASW]
-	516G1-42251		BOX,SWITCH	ﾎﾞｯｸｽ	1	A [LPG][LPO][AW061/LPG] [AW071/LPG]
-	516G1-42251		BOX,SWITCH	ﾎﾞｯｸｽ	1	[AW061/RWL][AW071/RWL] [RWL/BB SW][RWL/BBASW]
-	516G1-42251		BOX,SWITCH	ﾎﾞｯｸｽ	1	[AW061/BB SW][AW061/BBASW]
-	516G1-42251		BOX,SWITCH	ﾎﾞｯｸｽ	1	[AW071/BB SW][AW071/BBASW]
-	516G1-42251		BOX,SWITCH	ﾎﾞｯｸｽ	1	[AW061/RWL/BB SW] [AW061/RWL/BBASW]
-	516G1-42251		BOX,SWITCH	ﾎﾞｯｸｽ	1	[AW071/RWL/BB SW] [AW071/RWL/BBASW]
2	229F6-42201		SEAL,PANEL-COVER,A	ｼｰﾙ	2	[AW061][AW071][BB SW][BBASW]
-	229F6-42201		SEAL,PANEL-COVER,A	ｼｰﾙ	1	[RWL]
-	229F6-42201		SEAL,PANEL-COVER,A	ｼｰﾙ	1	A [LPG][LPO][AW061/LPG] [AW071/LPG]
-	229F6-42201		SEAL,PANEL-COVER,A	ｼｰﾙ	1	[AW061/RWL][AW071/RWL] [RWL/BB SW][RWL/BBASW]
-	229F6-42201		SEAL,PANEL-COVER,A	ｼｰﾙ	2	[AW061/BB SW][AW061/BBASW]
-	229F6-42201		SEAL,PANEL-COVER,A	ｼｰﾙ	2	[AW071/BB SW][AW071/BBASW]
-	229F6-42201		SEAL,PANEL-COVER,A	ｼｰﾙ	1	[AW061/RWL/BB SW] [AW061/RWL/BBASW]
-	229F6-42201		SEAL,PANEL-COVER,A	ｼｰﾙ	1	[AW071/RWL/BB SW] [AW071/RWL/BBASW]
3	229F6-42211		SEAL,PANEL-COVER,B	ｼｰﾙ	3	[AW061][AW071][RWL][BB SW] [BBASW]
-	229F6-42211		SEAL,PANEL-COVER,B	ｼｰﾙ	3	A [LPG][LPO]
-	229F6-42211		SEAL,PANEL-COVER,B	ｼｰﾙ	2	A [AW061/LPG][AW071/LPG]
-	229F6-42211		SEAL,PANEL-COVER,B	ｼｰﾙ	2	[AW061/RWL][AW071/RWL] [RWL/BB SW][RWL/BBASW]
-	229F6-42211		SEAL,PANEL-COVER,B	ｼｰﾙ	2	[AW061/BB SW][AW061/BBASW]
-	229F6-42211		SEAL,PANEL-COVER,B	ｼｰﾙ	2	[AW071/BB SW][AW071/BBASW]
-	229F6-42211		SEAL,PANEL-COVER,B	ｼｰﾙ	1	[AW061/RWL/BB SW] [AW061/RWL/BBASW]
-	229F6-42211		SEAL,PANEL-COVER,B	ｼｰﾙ	1	[AW071/RWL/BB SW] [AW071/RWL/BBASW]
4	214A6-42252		SCREW	ｽｸﾘｭ	2	[AW061][AW071][RWL][BB SW] [BBASW]
-	214A6-42252		SCREW	ｽｸﾘｭ	2	A [LPG][LPO][AW061/LPG] [AW071/LPG]
-	214A6-42252		SCREW	ｽｸﾘｭ	2	[AW061/RWL][AW071/RWL] [RWL/BB SW][RWL/BBASW]
-	214A6-42252		SCREW	ｽｸﾘｭ	2	[AW061/BB SW][AW061/BBASW]
-	214A6-42252		SCREW	ｽｸﾘｭ	2	[AW071/BB SW][AW071/BBASW]

TRAY [AW061][AW071][RWL][LPG][LPO] [BB SW][BBASW]

FIG.161

(F5H264A0) トレー

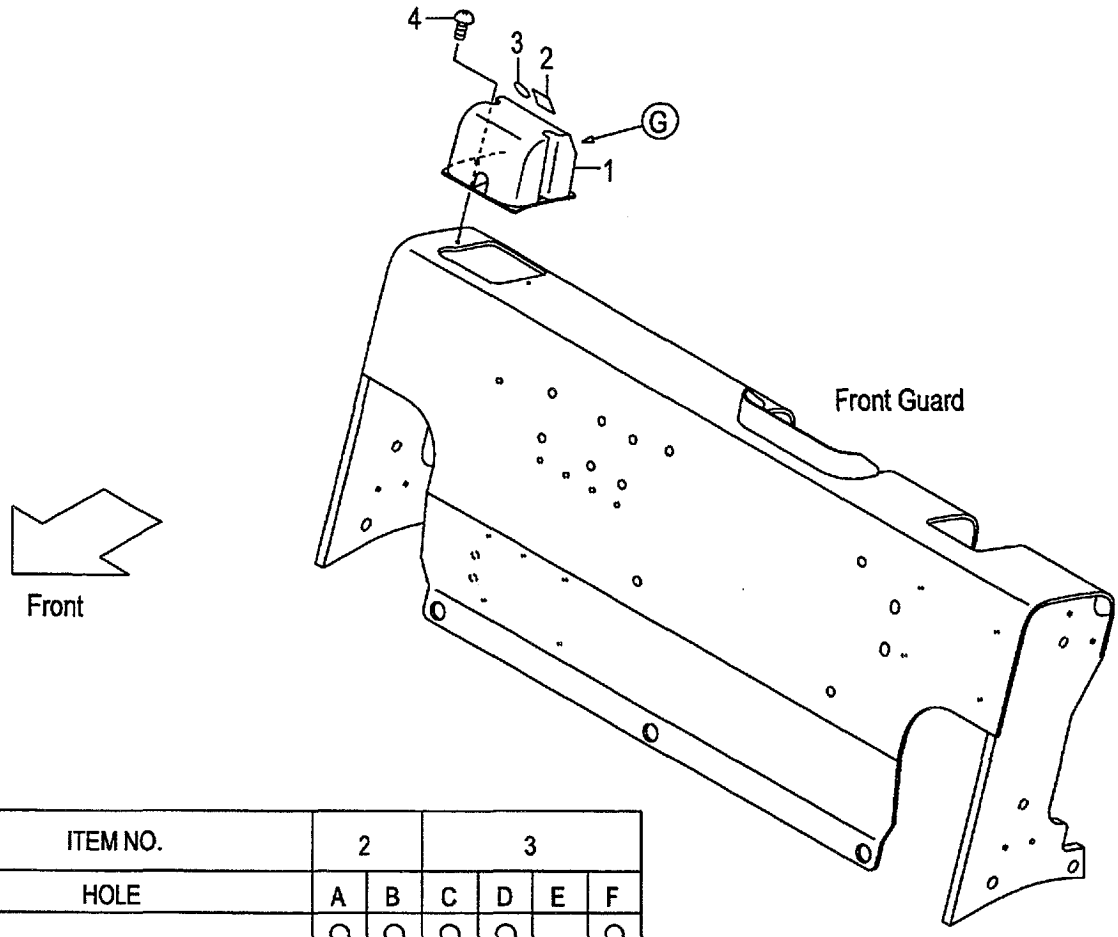

ITEM NO.		2		3			
HOLE		A	B	C	D	E	F
OPTION	[AW]	○	○	○	○		○
	[RWL]	○		○	○	○	
	[LPG]		○	○		○	○
	[BB SW][BBASW]	○	○	○	○		○
	[AW/RWL]	○		○	○		
	[AW/LPG]		○	○			○
	[AW/BB SW·BBASW]	○	○		○		○
	[RWL/BB SW·BBASW]	○		○	○		
	[AW/RWL/BB SW·BBASW]	○			○		

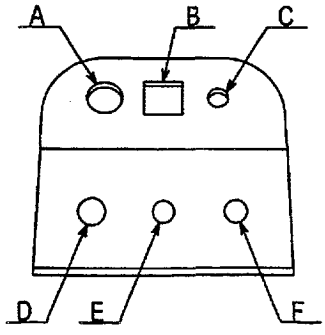

View from G

FIG.161
(F5H264A0)

A:FG20C6H FG20T6H FG25C6H FG25T6H FG20W6H FG25W6H
B:FD20C6H FD20T6H FD25C6H FD25T6H FD20W6H FD25W6H

Item No	Part No.	Mark	Description	Req'd	Remarks : Serial No.
-	214A6-42252		SCREW スクリュ	2	[AW061/RWL/BB SW] [AW061/RWL/BBASW]
-	214A6-42252		SCREW スクリュ	2	[AW071/RWL/BB SW] [AW071/RWL/BBASW]

FIG.162 TRAY [RWL/LPG][(AW061,AW071)/RWL/LPG]

(F5H264B0) トレー

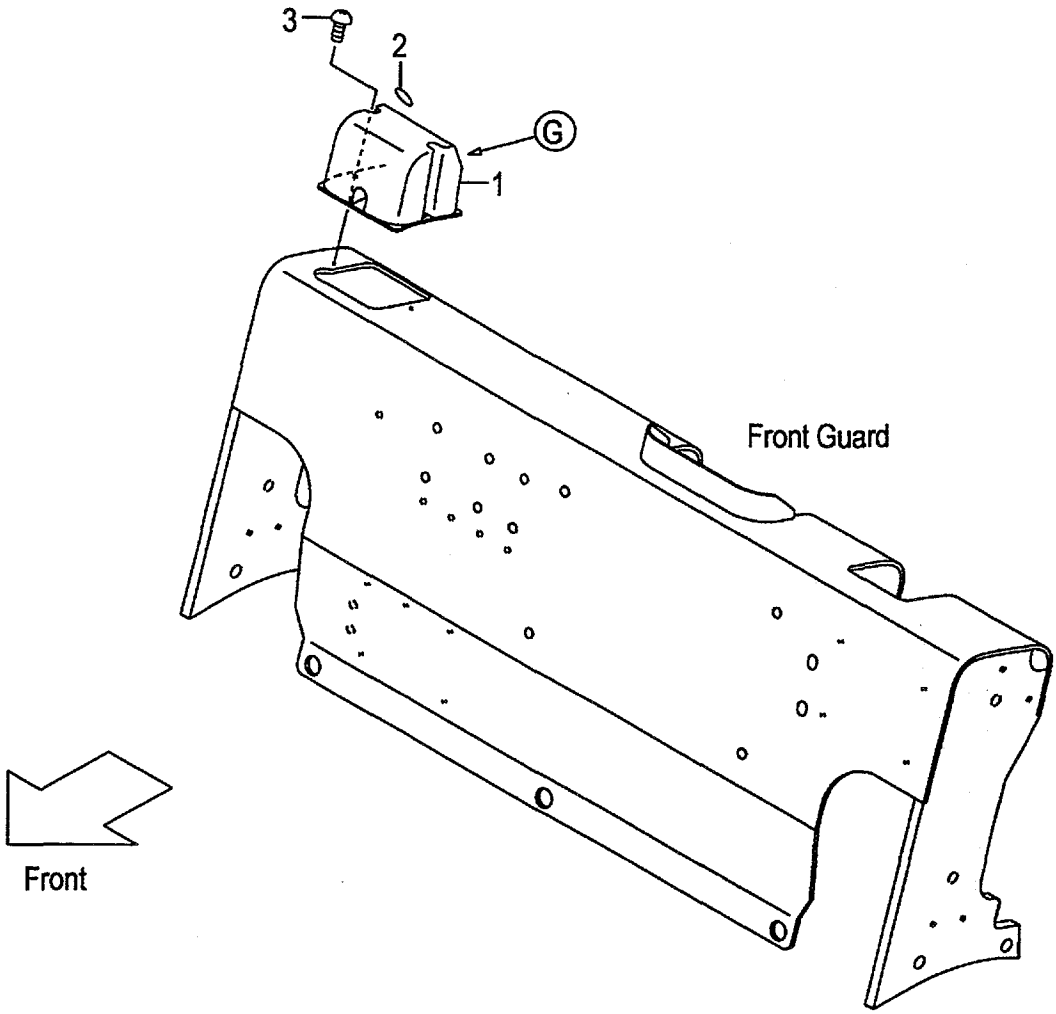

ITEM NO.				2			
HOLE		A	B	C	D	E	F
OPTION	[RWL/LPG]			○		○	
	[AW/RWL/LPG]			○			

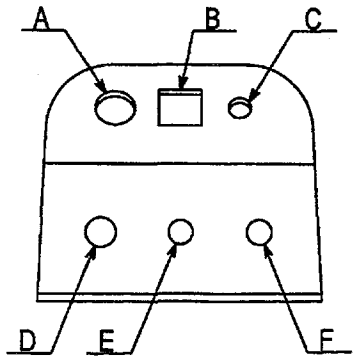

View from G

A:FG20C6H FG20T6H FG25C6H FG25T6H FG20W6H FG25W6H

Item No	Part No.	Mark	Description	Req'd	Remarks : Serial No.
1	516G1-42251		BOX,SWITCH ﾎﾞｯｸｽ	1	[RWL/LPG][AW061/RWL/LPG] [AW071/RWL/LPG]
2	229F6-42211		SEAL,PANEL-COVER,B ｼｰﾙ	2	[RWL/LPG]
-	229F6-42211		SEAL,PANEL-COVER,B ｼｰﾙ	1	[AW061/RWL/LPG] [AW071/RWL/LPG]
3	214A6-42252		SCREW ｽｸﾘｭ	2	[RWL/LPG][AW061/RWL/LPG] [AW071/RWL/LPG]

FIG.163 TRAY [SM][AM][TPM]

(F5H264C0) トレー

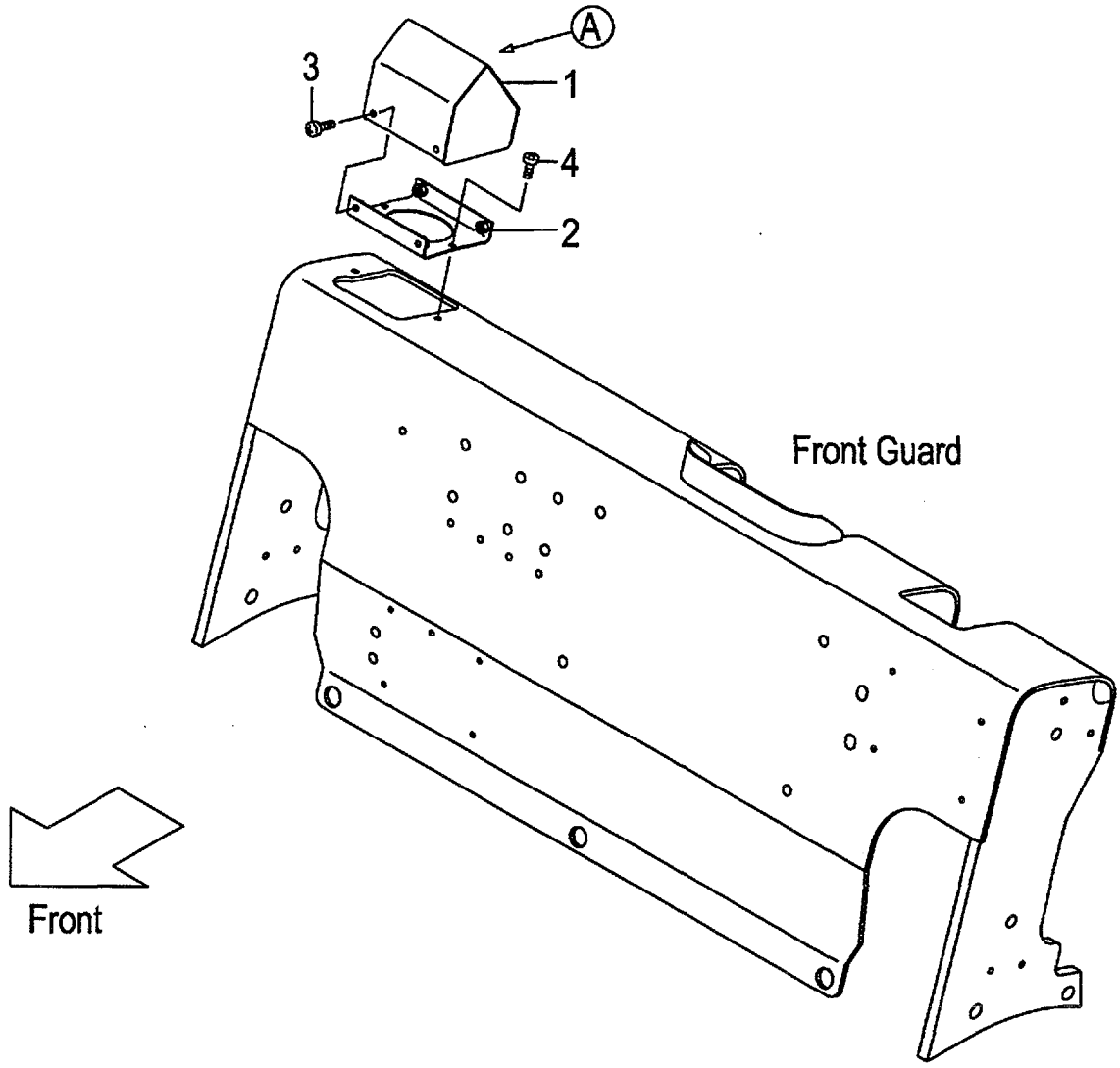

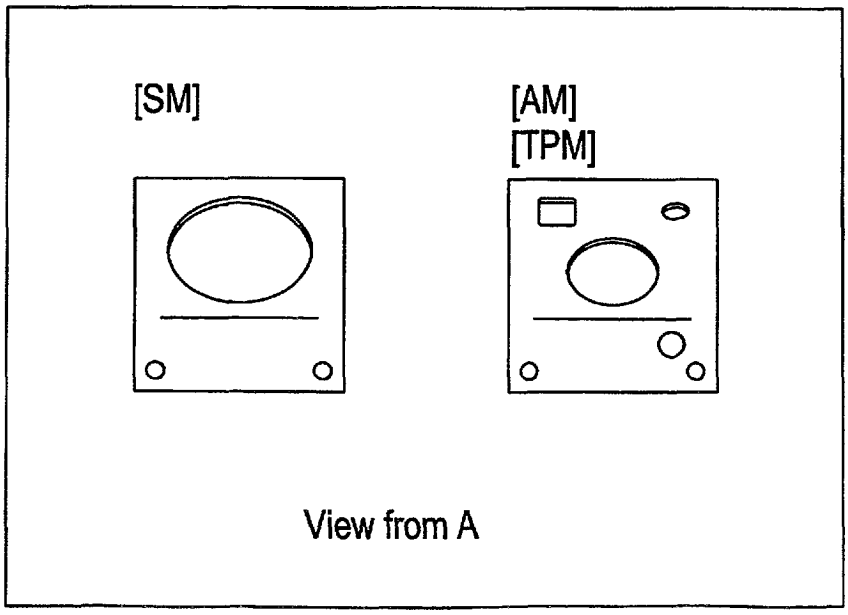

FIG.163
(F5H264C0)

A:FG20C6H FG20T6H FG25C6H FG25T6H FG20W6H FG25W6H
B:FD20C6H FD20T6H FD25C6H FD25T6H FD20W6H FD25W6H

Item No	Part No.	Mark	Description		Req'd	Remarks : Serial No.
1	516G7-50401		BOX,METER	ﾎﾞｯｸｽ	1	[SM]
-	516G6-90401		BOX,METER	ﾎﾞｯｸｽ	1	[AM][TPM]
2	516G1-42021		BRACKET	ﾌﾞﾗｹｯﾄ	1	[SM][AM][TPM]
3	214A6-42771		SCREW	ｽｸﾘｭ	4	[SM][AM][TPM]
4	214A6-42252		SCREW	ｽｸﾘｭ	2	[SM][AM][TPM]

TRAY [SM/(LPG,BB SW,BBASW)] [SM/(LPG,BB SW,BBASW)/RWL]

FIG.164

(F5H264D0) トレー

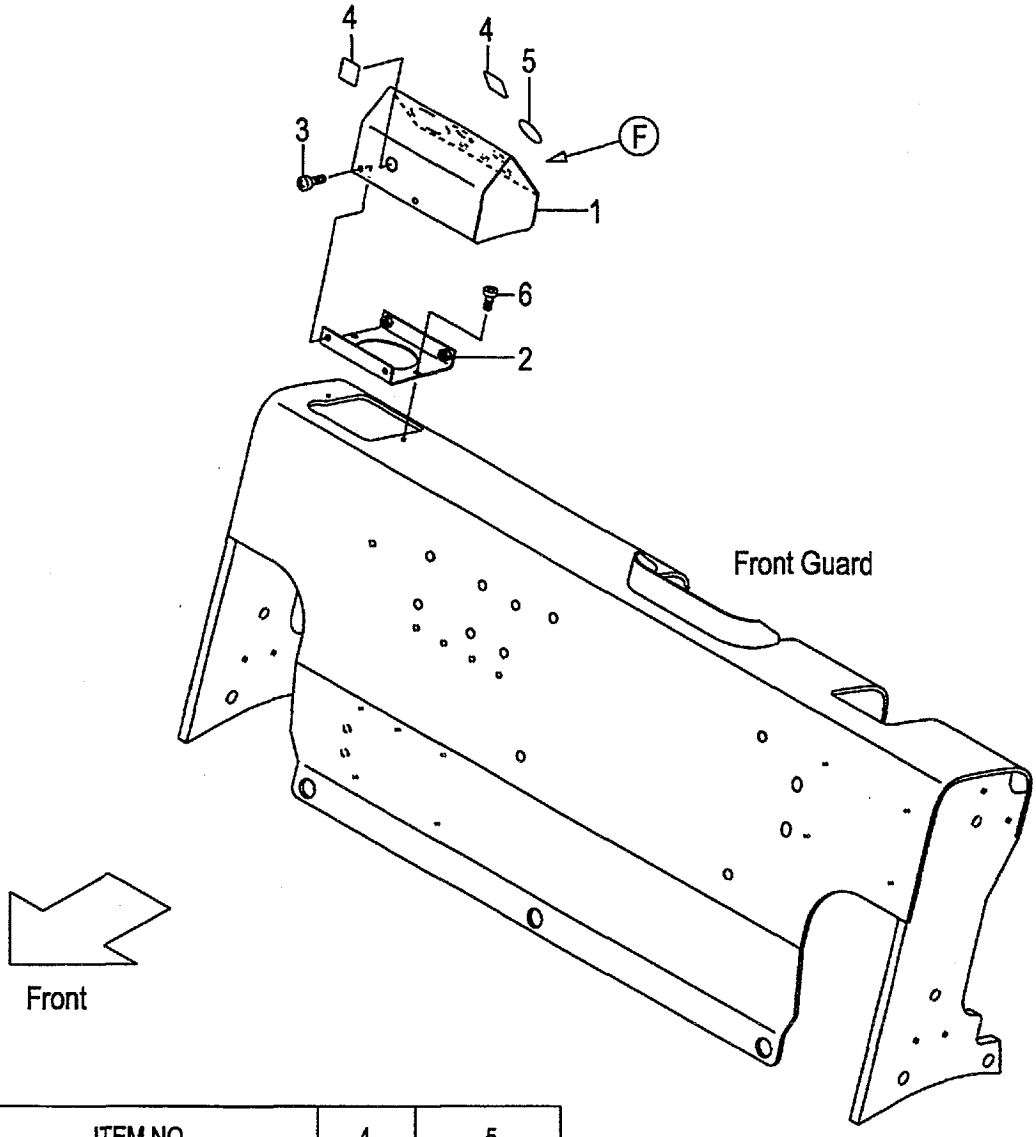

ITEM NO.		4		5		
HOLE		A	B	C	D	E
OPTION	[SM/LPG]		○		○	○
	[SM/BB SW·BBASW]	○	○		○	○
	[SM/LPG/RWL]				○	
	[SM/BB SW·BBASW/RWL]	○			○	

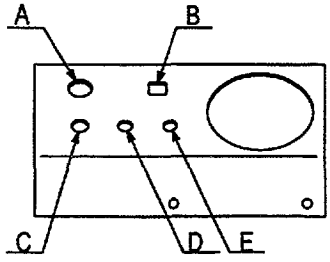

View from F

A:FG20C6H FG20T6H FG25C6H FG25T6H FG20W6H FG25W6H
B:FD20C6H FD20T6H FD25C6H FD25T6H FD20W6H FD25W6H

FIG.164
(F5H264D0)

Item No	Part No.	Mark	Description	Req'd	Remarks : Serial No.
1	516G7-50201		BOX,METER & SWITCH ﾎﾞｯｸｽ	1	A [SM/LPG][SM/LPG/RWL]
-	516G7-50201		BOX,METER & SWITCH ﾎﾞｯｸｽ	1	[SM/BB SW][SM/BBASW] [SM/BB SW/RWL][SM/BBASW/RWL]
2	516G1-42021		BRACKET ﾌﾞﾗｹｯﾄ	1	A [SM/LPG][SM/LPG/RWL]
-	516G1-42021		BRACKET ﾌﾞﾗｹｯﾄ	1	[SM/BB SW][SM/BBASW] [SM/BB SW/RWL][SM/BBASW/RWL]
3	214A6-42771		SCREW ｽｸﾘｭ	4	A [SM/LPG][SM/LPG/RWL]
-	214A6-42771		SCREW ｽｸﾘｭ	4	[SM/BB SW][SM/BBASW] [SM/BB SW/RWL][SM/BBASW/RWL]
4	229F6-42201		SEAL,PANEL-COVER,A ｼｰﾙ	2	A [SM/LPG]
-	229F6-42201		SEAL,PANEL-COVER,A ｼｰﾙ	3	[SM/BB SW][SM/BBASW]
-	229F6-42201		SEAL,PANEL-COVER,A ｼｰﾙ	1	A [SM/LPG/RWL]
-	229F6-42201		SEAL,PANEL-COVER,A ｼｰﾙ	2	[SM/BB SW/RWL][SM/BBASW/RWL]
5	229F6-42211		SEAL,PANEL-COVER,B ｼｰﾙ	2	A [SM/LPG]
-	229F6-42211		SEAL,PANEL-COVER,B ｼｰﾙ	2	[SM/BB SW][SM/BBASW]
-	229F6-42211		SEAL,PANEL-COVER,B ｼｰﾙ	1	A [SM/LPG/RWL]
-	229F6-42211		SEAL,PANEL-COVER,B ｼｰﾙ	1	[SM/BB SW/RWL][SM/BBASW/RWL]
6	214A6-42361		SCREW ｽｸﾘｭ	2	A [SM/LPG][SM/LPG/RWL]
-	214A6-42361		SCREW ｽｸﾘｭ	2	[SM/BB SW][SM/BBASW] [SM/BB SW/RWL][SM/BBASW/RWL]

FIG.165 TRAY [SM/(AW061,AW071)/RWL]

(F5H264E0) トレー

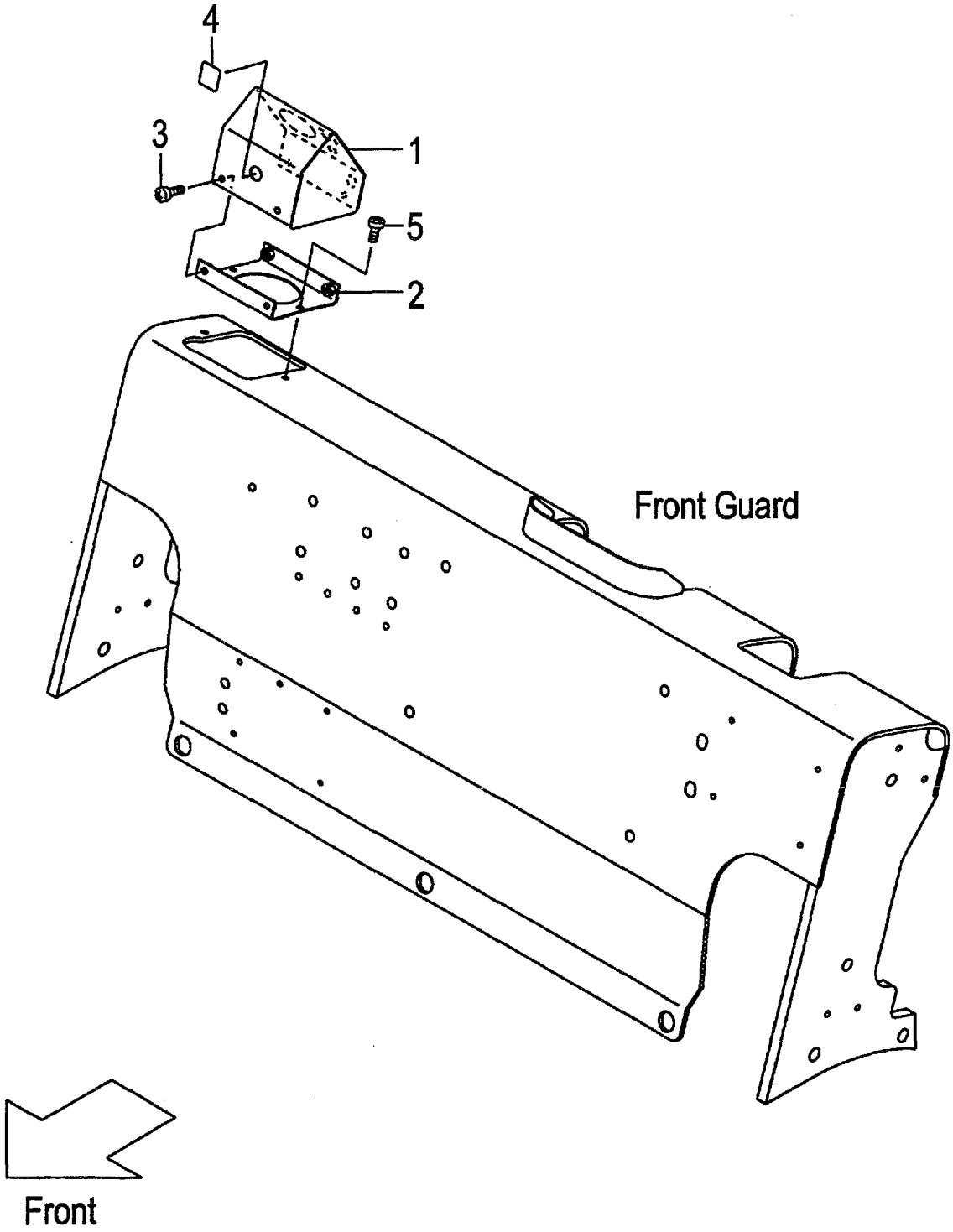

A:FG20C6H FG20T6H FG25C6H FG25T6H FG20W6H FG25W6H
B:FD20C6H FD20T6H FD25C6H FD25T6H FD20W6H FD25W6H

Item No	Part No.	Mark	Description		Req'd	Remarks : Serial No.
1	516G7-50211		BOX,METER & SWITCH	ﾎﾞｯｸｽ	1	[SM/AW061/RWL][SM/AW071/RWL]
2	516G1-42021		BRACKET	ﾌﾞﾗｹｯﾄ	1	[SM/AW061/RWL][SM/AW071/RWL]
3	214A6-42771		SCREW	ｽｸﾘｭ	4	[SM/AW061/RWL][SM/AW071/RWL]
4	229F6-42201		SEAL,PANEL-COVER,A	ｼｰﾙ	1	[SM/AW061/RWL][SM/AW071/RWL]
5	214A6-42361		SCREW	ｽｸﾘｭ	2	[SM/AW061/RWL][SM/AW071/RWL]

FIG.166 FRONT GUARD BOOT [FC]

(F5H264F0) ﾌﾛﾝﾄｶﾞｰﾄﾞﾌﾞｰﾂ

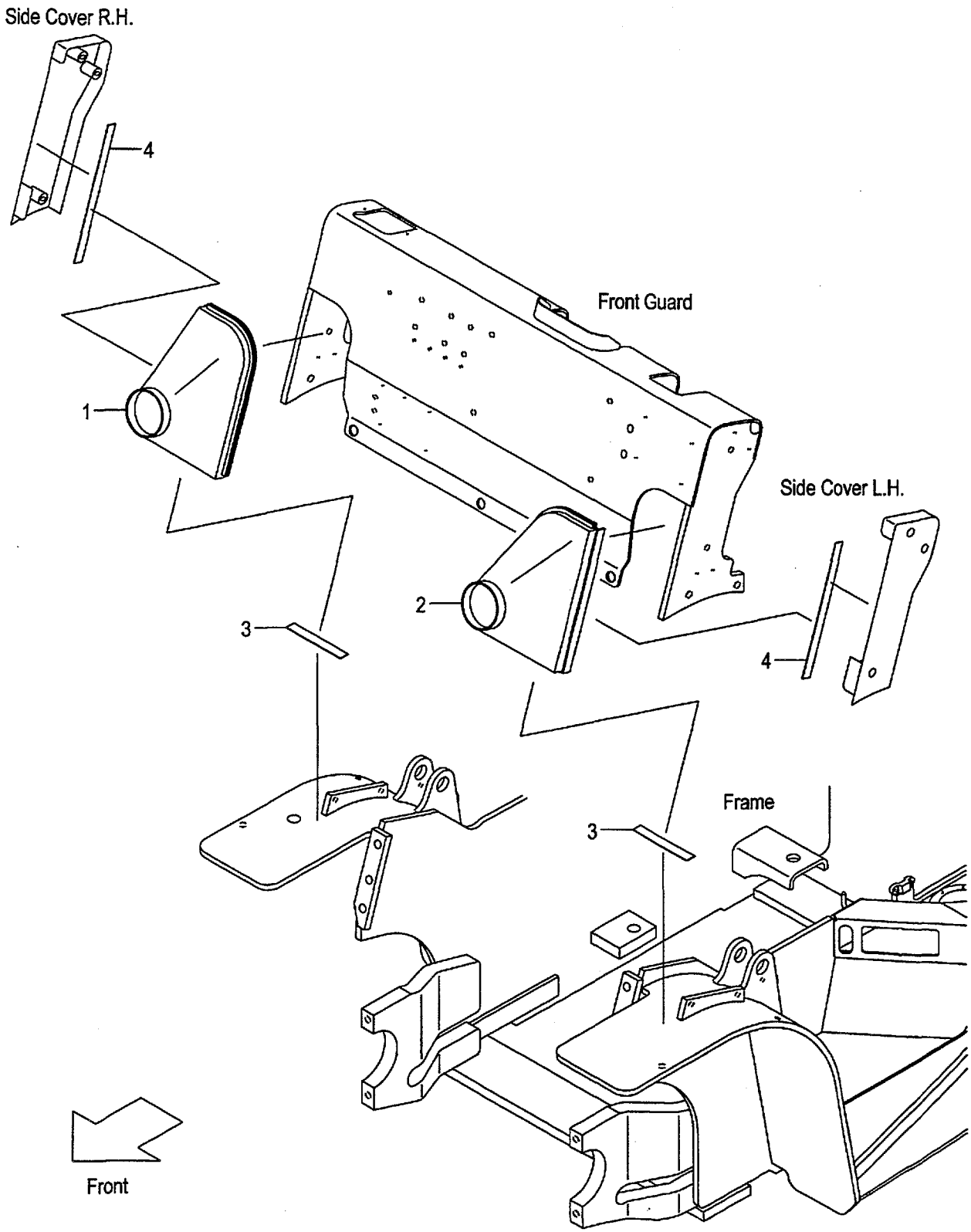

A:FG20C6H FG20T6H FG25C6H FG25T6H FG20W6H FG25W6H
B:FD20C6H FD20T6H FD25C6H FD25T6H FD20W6H FD25W6H

Item No	Part No.	Mark	Description		Req'd	Remarks : Serial No.
1	539A5-30251		BOOT,RH	ﾌﾞｰﾂ	1	[FC]
2	539A5-30261		BOOT,LH	ﾌﾞｰﾂ	1	[FC]
3	577H3-72181		TAPE	ﾃｰﾌﾟ	2	[FC]
4	539A5-32301		TAPE	ﾃｰﾌﾟ	2	[FC]

FIG.167 SEAT

(F5H26810) シート

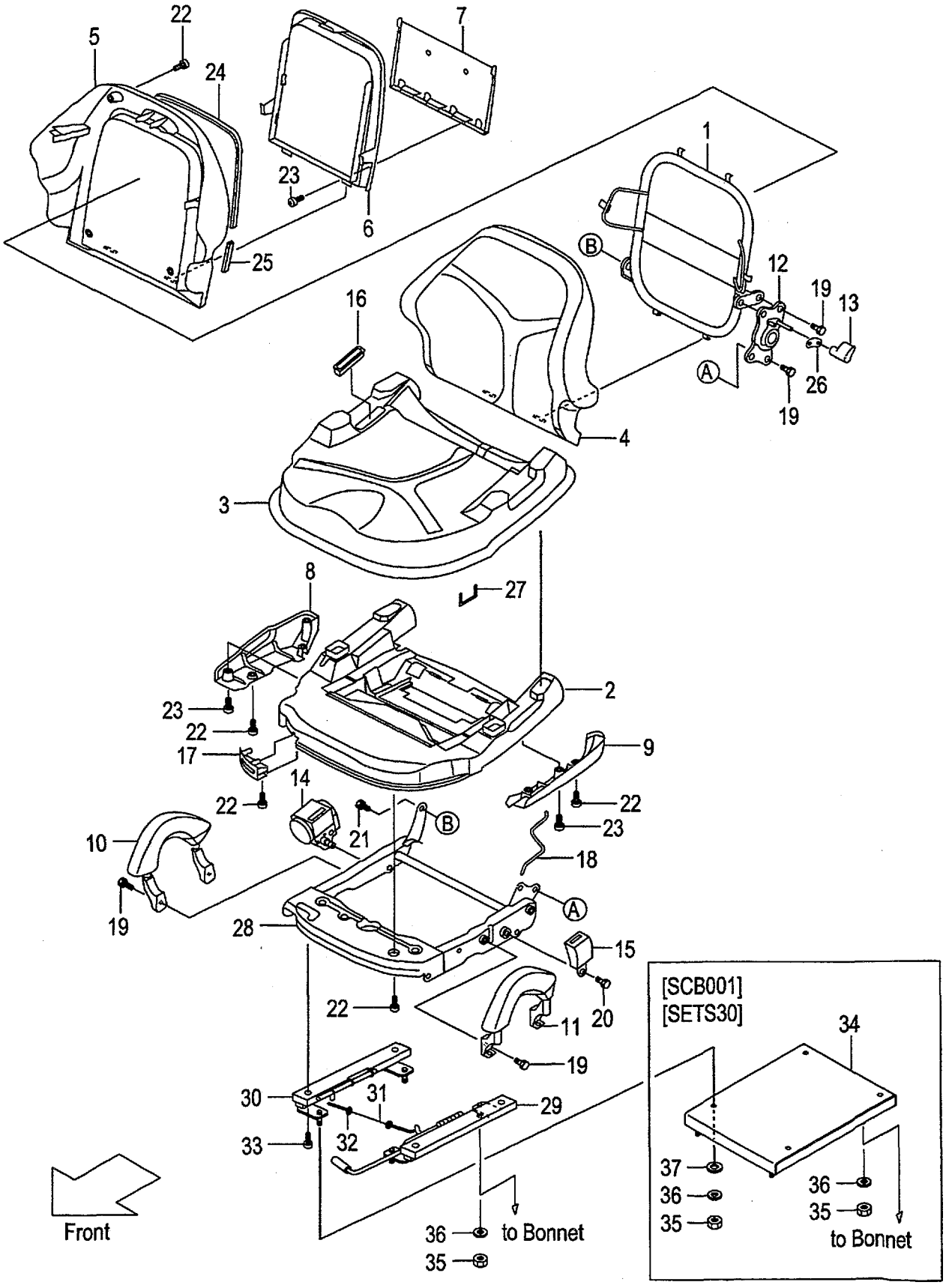

A:FG20C6H FG20T6H FG25C6H FG25T6H FG20W6H FG25W6H
B:FD20C6H FD20T6H FD25C6H FD25T6H FD20W6H FD25W6H

Item No	Part No.	Mark	Description		Req'd	Remarks : Serial No.
A1	234A6-81001		SEAT-ASSY	ｼｰﾄｱｯｾﾝ	1	INC.1-33
1	234A6-82001		FRAME	ﾌﾚｰﾑ	1	
2	234A6-82011		PLATE,BOTTOM	ﾌﾟﾚｰﾄ	1	
3	234A6-82021		PAD,CUSHION	ﾊﾟｯﾄﾞ	1	
4	234A6-82031		PAD,BACK	ﾊﾟｯﾄﾞ	1	
5	234A6-82041		COVER	ｶﾊﾞｰ	1	
6	234A6-82051		LID	ﾘｯﾄﾞ	1	
7	234A6-82061		RACK	ﾗｯｸ	1	
8	234A6-82071		COVER,RH	ｶﾊﾞｰ	1	
9	234A6-82081		COVER,LH	ｶﾊﾞｰ	1	
10	234A6-82091		GRIP,RH	ｸﾞﾘｯﾌﾟ	1	
11	234A6-82101		GRIP,LH	ｸﾞﾘｯﾌﾟ	1	
12	234A6-82111		DVC	ﾃﾞｨｰﾌﾞｲｼｰ	1	
13	234A6-82121		KNOB	ﾉﾌﾞ	1	
14	234A6-82131		BELT	ﾍﾞﾙﾄ	1	
15	234A6-82141		BACKLE	ﾊﾞｯｸﾙ	1	
16	234A6-82151		COVER,BELT	ｶﾊﾞｰ	1	
17	234A6-82161		COVER,ADJUSTER	ｶﾊﾞｰ	1	
18	234A6-82171		SPRING	ｽﾌﾟﾘﾝｸﾞ	1	
19	01184-10020		BOLT	ﾎﾞﾙﾄ	8	
20	234A6-82181		BOLT	ﾎﾞﾙﾄ	2	
21	234A6-82191		BOLT	ﾎﾞﾙﾄ	1	
22	234A6-82201		SCREW	ｽｸﾘｭ	14	
23	234A6-82211		SCREW	ｽｸﾘｭ	5	
24	234A6-82221		SEAL,A	ｼｰﾙ	1	
25	234A6-82231		SEAL,B	ｼｰﾙ	2	
26	234A6-82241		MOLE	ﾓｰﾙ	1	
27	NO PART NO.	#	STAPLE	ｽﾃｰﾌﾟﾙ	30	
28	234A6-82251		SUSPENSION	ｻｽﾍﾟﾝｼｮﾝ	1	
29	234A6-82261		RAIL,SLIDE A	ﾚｰﾙ	1	
30	234A6-82271		RAIL,SLIDE C	ﾚｰﾙ	1	
31	234A6-82281		CABLE	ｹｰﾌﾞﾙ	1	
32	234A6-82291		WASHER	ﾜｯｼｬ	2	
33	234A6-82301		BOLT	ﾎﾞﾙﾄ	4	
34	534A5-32311		SPACER,SEAT	ｽﾍﾟｰｻ	1	[SCB001][SETS30]
35	01400-00008		NUT	ﾅｯﾄ	4	
-	01400-00008		NUT	ﾅｯﾄ	8	[SCB001][SETS30]
36	02010-00008		WASHER	ﾜｯｼｬ	4	
-	02010-00008		WASHER	ﾜｯｼｬ	8	[SCB001][SETS30]
37	02000-00008		WASHER	ﾜｯｼｬ	4	[SCB001][SETS30]

FIG.168 SEAT [HGL]

(F5H26830) シート

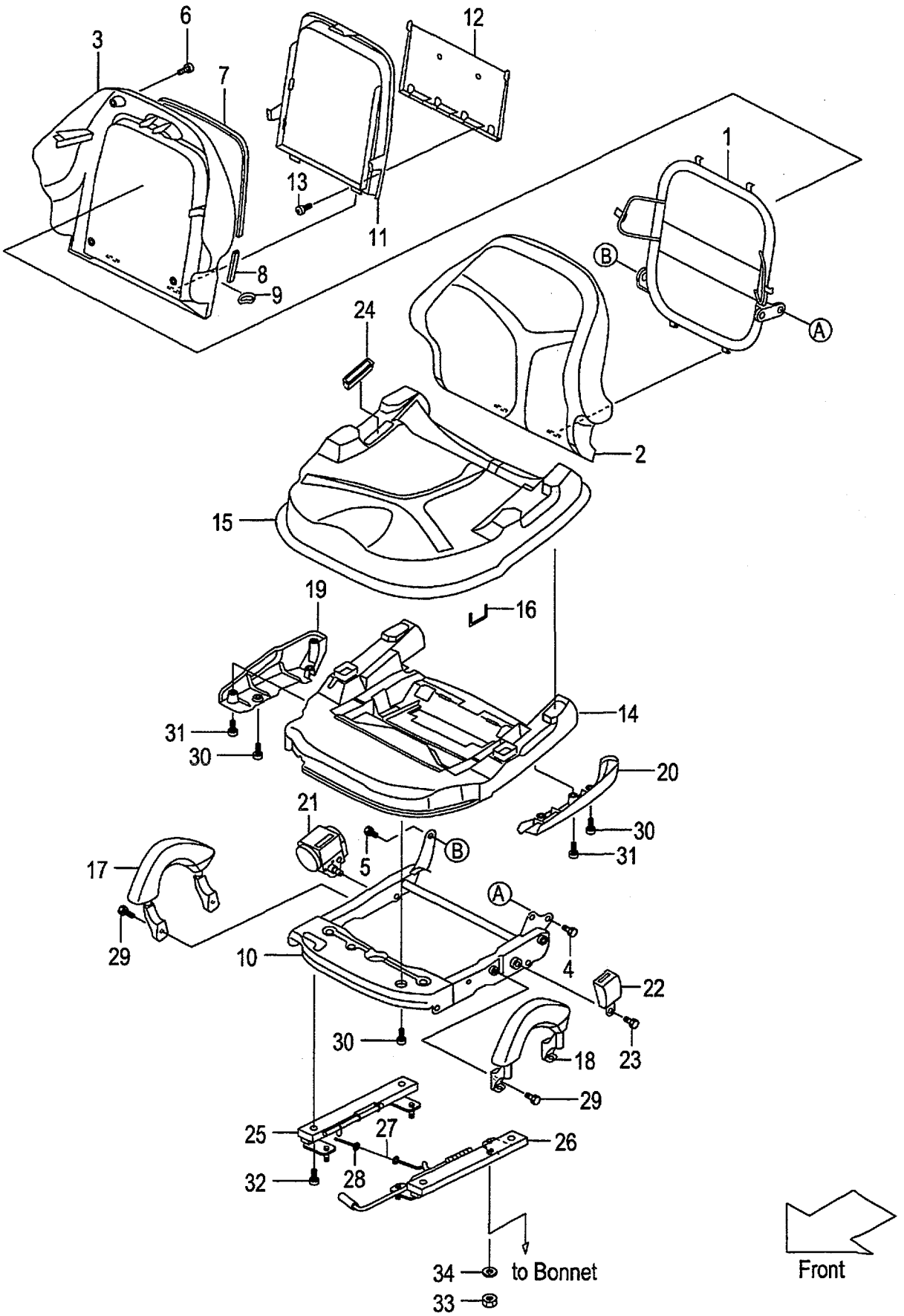

A:FG20C6H FG20T6H FG25C6H FG25T6H FG20W6H FG25W6H
B:FD20C6H FD20T6H FD25C6H FD25T6H FD20W6H FD25W6H

Item No	Part No.	Mark	Description		Req'd	Remarks : Serial No.
A1	216G6-82501		SEAT-ASSY	ｼｰﾄｱｯｾﾝ	1	[HGL] INC.1-32
1	234A6-82001		FRAME,BACK	ﾌﾚｰﾑ	1	[HGL]
2	234A6-82031		PAD,BACK	ﾊﾟｯﾄﾞ	1	[HGL]
3	234A6-82041		COVER	ｶﾊﾞｰ	1	[HGL]
4	01184-10020		BOLT	ﾎﾞﾙﾄ	2	[HGL]
5	234A6-82191		BOLT	ﾎﾞﾙﾄ	1	[HGL]
6	234A6-82201		SCREW	ｽｸﾘｭ	4	[HGL]
7	234A6-82221		SEAL,A	ｼｰﾙ	1	[HGL]
8	234A6-82231		SEAL,B	ｼｰﾙ	2	[HGL]
9	234A6-82241		MOLE	ﾓｰﾙ	1	[HGL]
10	216G6-82611		FRAME,UPPER	ﾌﾚｰﾑ	1	[HGL]
11	234A6-82051		LID	ﾘｯﾄﾞ	1	[HGL]
12	234A6-82061		RACK	ﾗｯｸ	1	[HGL]
13	234A6-82211		SCREW	ｽｸﾘｭ	2	[HGL]
14	216G6-82601		PLATE,BOTTOM	ﾌﾟﾚｰﾄ	1	[HGL]
15	234A6-82021		PAD,CUSHION	ﾊﾟｯﾄﾞ	1	[HGL]
16	NO PART NO.	#	STAPLE	ｽﾃｰﾌﾟﾙ	6	[HGL]
17	234A6-82091		GRIP,RH	ｸﾞﾘｯﾌﾟ	1	[HGL]
18	234A6-82101		GRIP,LH	ｸﾞﾘｯﾌﾟ	1	[HGL]
19	234A6-82071		COVER,RH	ｶﾊﾞｰ	1	[HGL]
20	234A6-82081		COVER,LH	ｶﾊﾞｰ	1	[HGL]
21	234A6-82131		BELT	ﾍﾞﾙﾄ	1	[HGL]
22	234A6-82141		BACKLE	ﾊﾞｯｸﾙ	1	[HGL]
23	234A6-82181		BOLT	ﾎﾞﾙﾄ	2	[HGL]
24	234A6-82151		COVER,BELT	ｶﾊﾞｰ	1	[HGL]
25	234A6-82271		RAIL,SLIDE C	ﾚｰﾙ	1	[HGL]
26	216G6-82621		RAIL,SLIDE A	ﾚｰﾙ	1	[HGL]
27	234A6-82281		CABLE	ｹｰﾌﾞﾙ	1	[HGL]
28	234A6-82291		WASHER	ﾜｯｼｬ	2	[HGL]
29	01184-10020		BOLT	ﾎﾞﾙﾄ	4	[HGL]
30	234A6-82201		SCREW	ｽｸﾘｭ	6	[HGL]
31	234A6-82211		SCREW	ｽｸﾘｭ	3	[HGL]
32	234A6-82301		BOLT	ﾎﾞﾙﾄ	4	[HGL]
33	01400-00008		NUT	ﾅｯﾄ	4	[HGL]
34	02010-00008		WASHER	ﾜｯｼｬ	4	[HGL]

FIG.169 SEAT [RW][CNG]

(F5H26840) シート

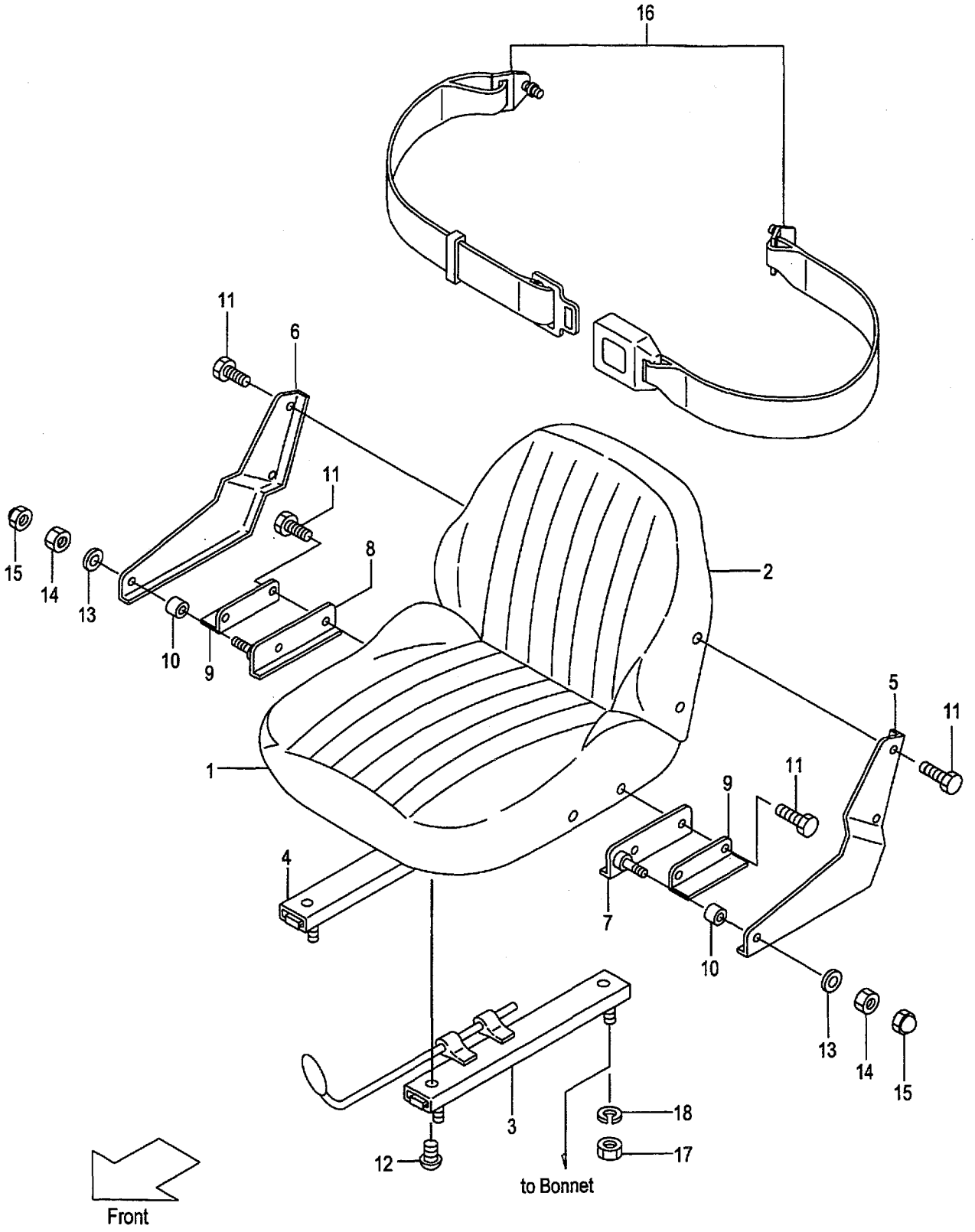

A:FG25C6H FG25T6H FG25W6H
B:FD25C6H FD25T6H FD25W6H

Item No	Part No.	Mark	Description		Req'd	Remarks : Serial No.
A1	24846-80302		SEAT-ASSY	ｼｰﾄｱｯｾﾝ	1	[RW] INC.1-15
-	24846-80302		SEAT-ASSY	ｼｰﾄｱｯｾﾝ	1	A
						[CNG] INC.1-15
1	23656-83001		CUSHION,SEAT	ｸｯｼｮﾝ	1	[RW]
-	23656-83001		CUSHION,SEAT	ｸｯｼｮﾝ	1	A
						[CNG]
2	23656-83011		BACK,SEAT	ﾊﾞｯｸ	1	[RW]
-	23656-83011		BACK,SEAT	ﾊﾞｯｸ	1	A
						[CNG]
3	NO PART NO.	#	ADJUSTER,SEAT	ｱｼﾞｬｽﾀ	1	[RW]
-	NO PART NO.	#	ADJUSTER,SEAT	ｱｼﾞｬｽﾀ	1	A
						[CNG]
4	NO PART NO.	#	ADJUSTER,SEAT	ｱｼﾞｬｽﾀ	1	[RW]
-	NO PART NO.	#	ADJUSTER,SEAT	ｱｼﾞｬｽﾀ	1	A
						[CNG]
5	24846-82001		PLATE,SIDE,LH	ﾌﾟﾚｰﾄ	1	[RW]
-	24846-82001		PLATE,SIDE,LH	ﾌﾟﾚｰﾄ	1	A
						[CNG]
6	24846-82011		PLATE,SIDE,RH	ﾌﾟﾚｰﾄ	1	[RW]
-	24846-82011		PLATE,SIDE,RH	ﾌﾟﾚｰﾄ	1	A
						[CNG]
7	24846-82021		BRACKET,HINGE,LH	ﾌﾞﾗｹｯﾄ	1	[RW]
-	24846-82021		BRACKET,HINGE,LH	ﾌﾞﾗｹｯﾄ	1	A
						[CNG]
8	24846-82031		BRACKET,HINGE,RH	ﾌﾞﾗｹｯﾄ	1	[RW]
-	24846-82031		BRACKET,HINGE,RH	ﾌﾞﾗｹｯﾄ	1	A
						[CNG]
9	24846-82041		BRACKET	ﾌﾞﾗｹｯﾄ	2	[RW]
-	24846-82041		BRACKET	ﾌﾞﾗｹｯﾄ	2	A
						[CNG]
10	23655-22101		BUSHING	ﾌﾞｯｼﾝｸﾞ	2	[RW]
-	23655-22101		BUSHING	ﾌﾞｯｼﾝｸﾞ	2	A
						[CNG]
11	23656-83051		BOLT	ﾎﾞﾙﾄ	8	[RW]
-	23656-83051		BOLT	ﾎﾞﾙﾄ	8	A
						[CNG]
12	23656-83061		SCREW	ｽｸﾘｭ	4	[RW]
-	23656-83061		SCREW	ｽｸﾘｭ	4	A
						[CNG]
13	02000-00010		WASHER	ﾜｯｼｬ	2	[RW]
-	02000-00010		WASHER	ﾜｯｼｬ	2	A
						[CNG]
14	01402-00010		NUT	ﾅｯﾄ	2	[RW]
-	01402-00010		NUT	ﾅｯﾄ	2	A
						[CNG]
15	24846-82051		NUT,CAP	ﾅｯﾄ	2	[RW]
-	24846-82051		NUT,CAP	ﾅｯﾄ	2	A
						[CNG]
16	514T6-42001		BELT,SEAT	ﾍﾞﾙﾄ	1	[RW]

FIG.169 SEAT [RW][CNG]

(F5H26840) シート

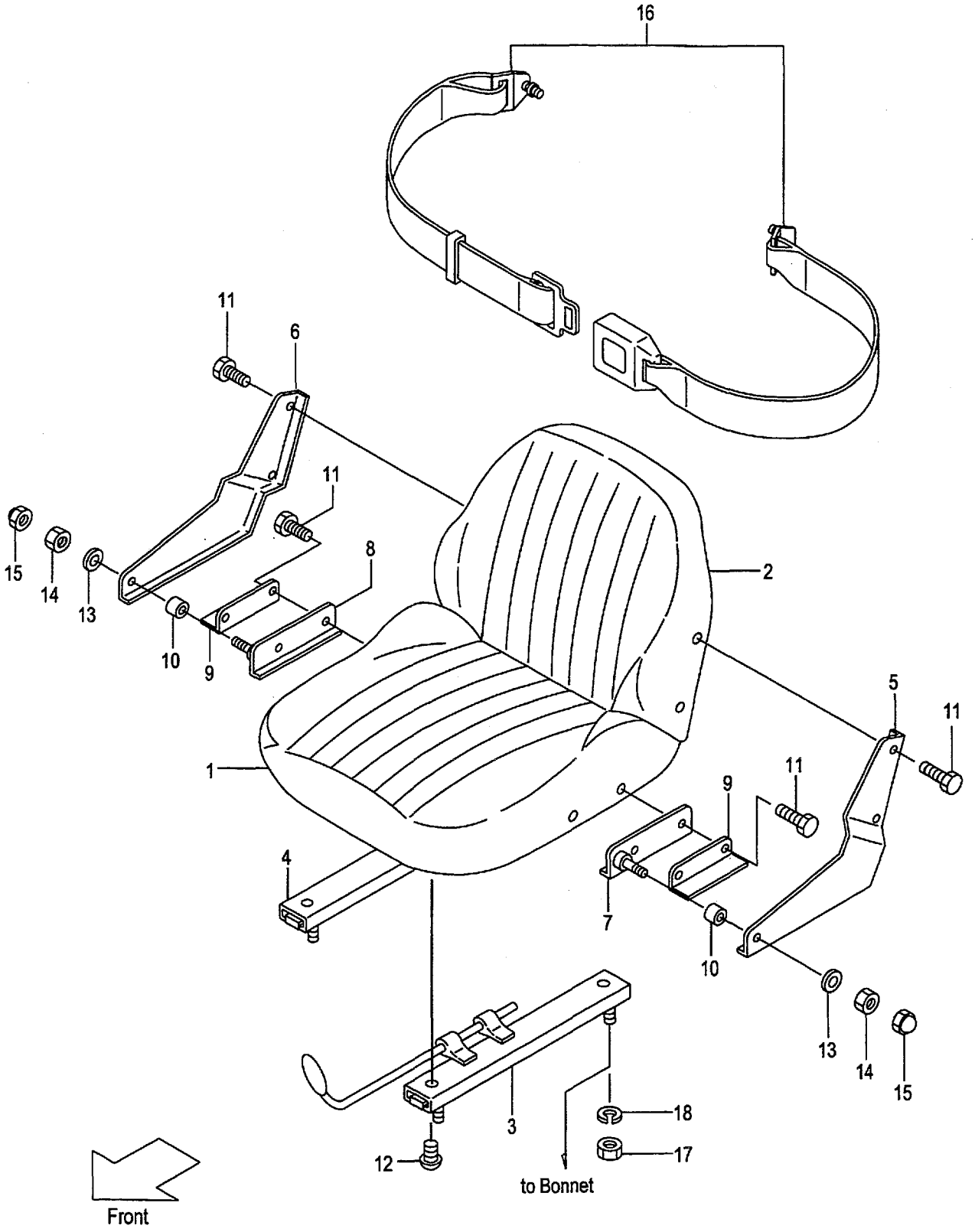

A:FG25C6H FG25T6H FG25W6H
B:FD25C6H FD25T6H FD25W6H

Item No	Part No.	Mark	Description		Req'd	Remarks : Serial No.
-	514T6-42001		BELT,SEAT	ﾍﾞﾙﾄ	1	A [CNG]
17	01400-00008		NUT	ﾅｯﾄ	4	[RW]
-	01400-00008		NUT	ﾅｯﾄ	4	A [CNG]
18	02010-00008		WASHER	ﾜｯｼｬ	4	[RW]
-	02010-00008		WASHER	ﾜｯｼｬ	4	A [CNG]

FIG.170 PUMP UNIT (GASOLINE:CLUTCH & TOR-CON)

(F5H27110) ﾎﾟﾝﾌﾟﾕﾆｯﾄ

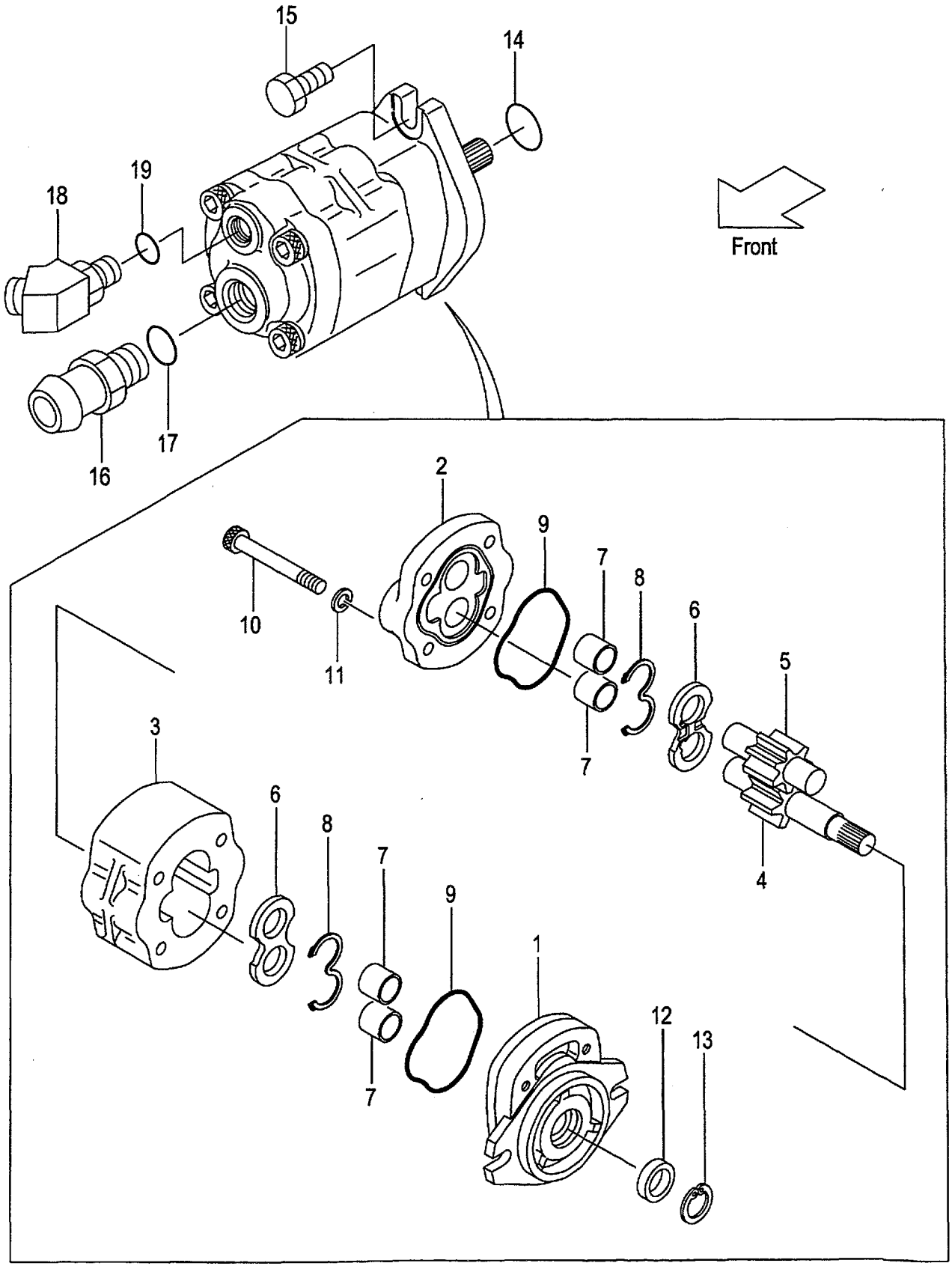

A:FG20C6H FG20T6H FG25C6H FG25T6H

Item No	Part No.	Mark	Description		Req'd	Remarks : Serial No.
A1	110F7-10271		PUMP-ASSY,GEAR	ｷﾞﾔｰﾎﾟﾝﾌﾟｱｯｾﾝ	1	INC.1-13
1	NO PART NO.	#	COVER,FRONT	ｶﾊﾞｰ	1	
2	NO PART NO.	#	COVER,REAR	ｶﾊﾞｰ	1	
3	NO PART NO.	#	BODY	ﾎﾞﾃﾞｨ	1	
4	NO PART NO.	#	GEAR,DRIVE	ｷﾞﾔｰ	1	
5	NO PART NO.	#	GEAR,DRIVEN	ｷﾞﾔｰ	1	
6	NO PART NO.	#	PLATE,SIDE	ﾌﾟﾚｰﾄ	2	
7	NO PART NO.	#	BUSHING	ﾌﾞｯｼﾝｸﾞ	4	
8	NO PART NO.	#*	GASKET	ｶﾞｽｹｯﾄ	2	
9	NO PART NO.	#*	GASKET	ｶﾞｽｹｯﾄ	2	
10	R-400-50647-03		BOLT	ﾎﾞﾙﾄ	4	
11	R-402-00012-12		WASHER	ﾜｯｼｬ	4	
12	NO PART NO.	#*	SEAL,OIL	ｼｰﾙ	1	
13	NO PART NO.	#*	RING,SNAP	ｽﾅｯﾌﾟﾘﾝｸﾞ	1	
14	03340-00140		O-RING	Oﾘﾝｸﾞ	1	
15	01185-10030		BOLT	ﾎﾞﾙﾄ	2	
A2	225A7-62021		NIPPLE-ASSY	ﾆｯﾌﾟﾙｱｯｾﾝ	1	INC.16,17
16	NO PART NO.	#	NIPPLE	ﾆｯﾌﾟﾙ	1	
17	03320-00290		O-RING	Oﾘﾝｸﾞ	1	
A3	216M7-62101		ADAPTER-ASSY	ｱﾀﾞﾌﾟﾀｱｯｾﾝ	1	INC.18,19
18	NO PART NO.	#	ADAPTER	ｱﾀﾞﾌﾟﾀ	1	
19	03320-00180		O-RING	Oﾘﾝｸﾞ	1	
K1	110F7-12001		KIT,REPAIR	ﾘﾍﾟｱｷｯﾄ	1	INC.8,9,12,13

FIG.171 PUMP UNIT (DIESEL:CLUTCH & TOR-CON)

(F5H27120) ﾎﾟﾝﾌﾟﾕﾆｯﾄ

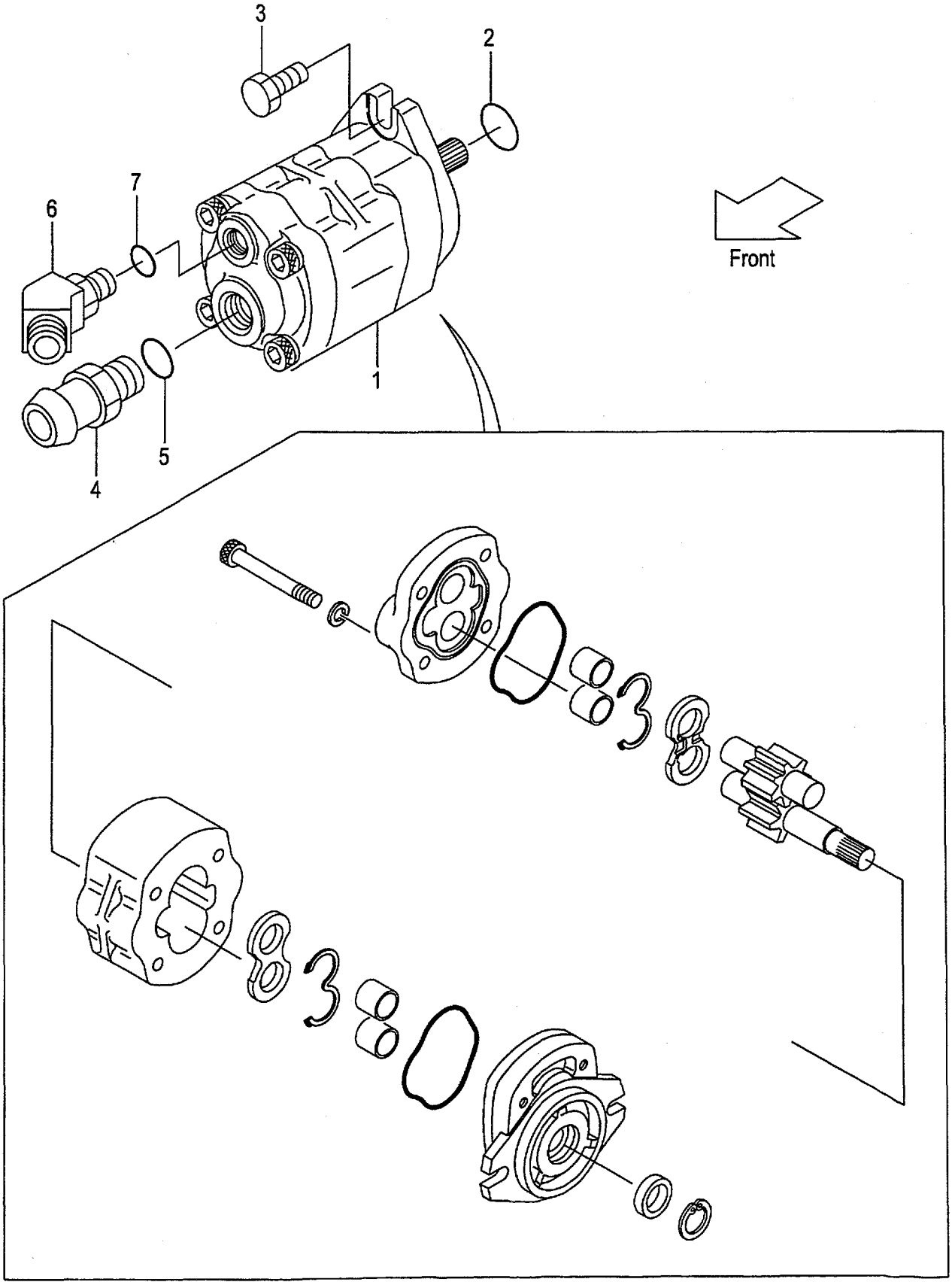

A:FD20C6H FD20T6H FD25C6H FD25T6H

Item No	Part No.	Mark	Description		Req'd	Remarks : Serial No.
1	139A7-10101		PUMP,GEAR	ﾎﾟﾝﾌﾟ	1	
2	03340-00140		O-RING	Oﾘﾝｸﾞ	1	
3	01186-10030		BOLT	ﾎﾞﾙﾄ	2	
A1	225A7-62021		NIPPLE-ASSY	ﾆｯﾌﾟﾙｱｯｾﾝ	1	INC.4,5
4	NO PART NO.	#	NIPPLE	ﾆｯﾌﾟﾙ	1	
5	03320-00290		O-RING	Oﾘﾝｸﾞ	1	
A2	216M7-62101		ADAPTER-ASSY	ｱﾀﾞﾌﾟﾀｱｯｾﾝ	1	INC.6,7
6	NO PART NO.	#	ADAPTER	ｱﾀﾞﾌﾟﾀ	1	
7	03320-00180		O-RING	Oﾘﾝｸﾞ	1	

FIG.172 PUMP UNIT (GASOLINE:OIL CLUTCH)

(F5H27140) ﾎﾟﾝﾌﾟﾕﾆｯﾄ

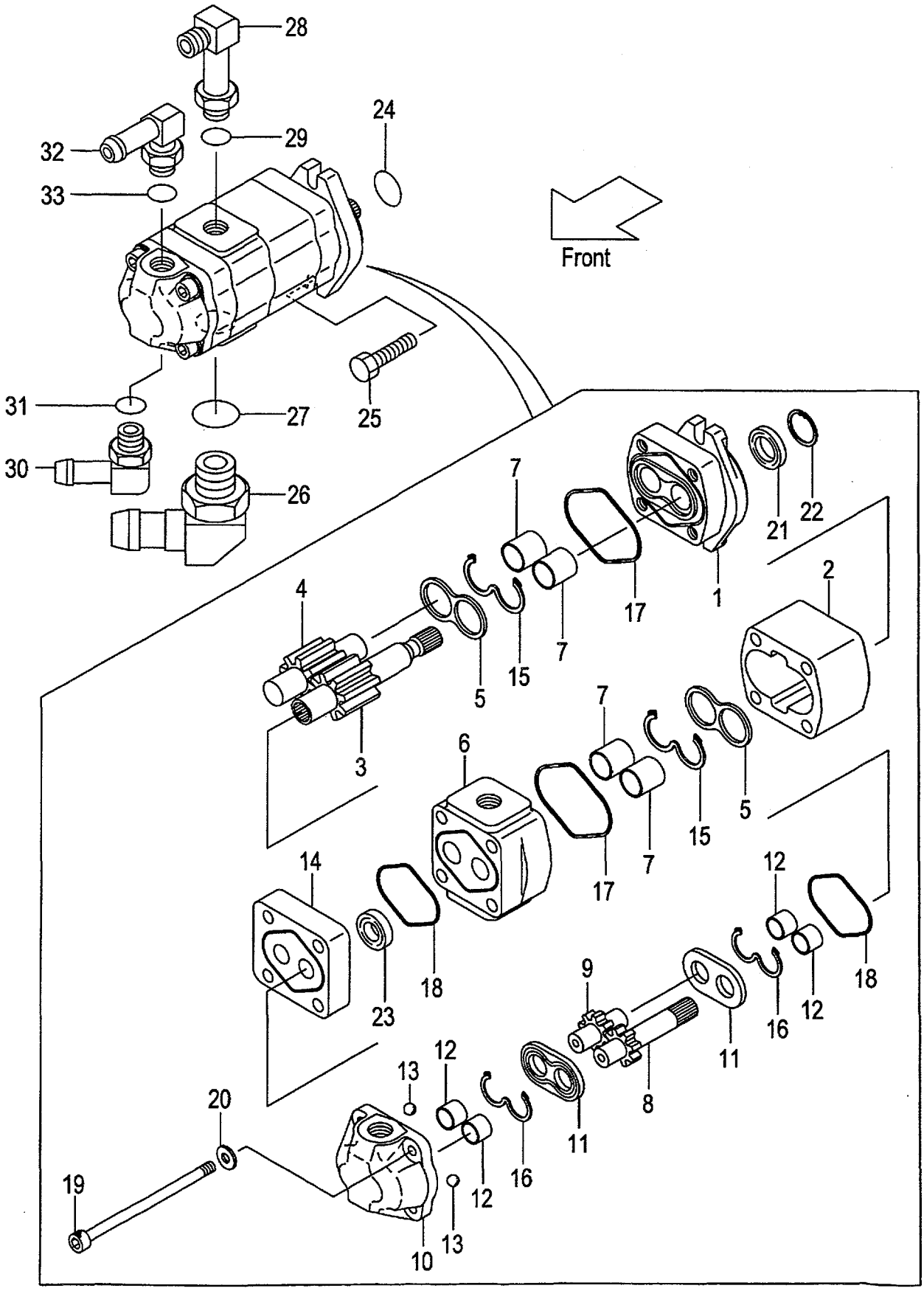

A:FG20W6H FG25W6H

Item No	Part No.	Mark	Description		Req'd	Remarks : Serial No.
A1	116W7-10301		PUMP-ASSY,GEAR	ｷﾞﾔｰﾎﾟﾝﾌﾟｱｯｾﾝ	1	INC.1-23
1	NO PART NO.	#	COVER,FRONT	ｶﾊﾞｰ	1	
2	NO PART NO.	#	BODY,1	ﾎﾞﾃﾞｨ	1	
3	NO PART NO.	#	GEAR,DRIVE,1	ｷﾞﾔｰ	1	
4	NO PART NO.	#	GEAR,DRIVEN,1	ｷﾞﾔｰ	1	
5	NO PART NO.	#	PLATE,SIDE,1	ﾌﾟﾚｰﾄ	2	
6	NO PART NO.	#	PLATE,ADAPTER	ﾌﾟﾚｰﾄ	1	
7	NO PART NO.	#	BUSHING,1	ﾌﾞｯｼﾝｸﾞ	4	
8	NO PART NO.	#	GEAR,DRIVE,2	ｷﾞﾔｰ	1	
9	NO PART NO.	#	GEAR,DRIVEN,2	ｷﾞﾔｰ	1	
10	NO PART NO.	#	BODY,2	ﾎﾞﾃﾞｨ	1	
11	NO PART NO.	#	PLATE,SIDE,2	ﾌﾟﾚｰﾄ	2	
12	NO PART NO.	#	BUSHING,2	ﾌﾞｯｼﾝｸﾞ	4	
13	NO PART NO.	#	BALL,STEEL	ﾎﾞｰﾙ	2	
14	NO PART NO.	#	SUB-PLATE,ADAPTER	ｻﾌﾞﾌﾟﾚｰﾄ	1	
15	NO PART NO.	#*	GASKET,1	ｶﾞｽｹｯﾄ	2	
16	NO PART NO.	#*	GASKET,2	ｶﾞｽｹｯﾄ	2	
17	NO PART NO.	#*	GASKET,1	ｶﾞｽｹｯﾄ	2	
18	NO PART NO.	#*	GASKET,2	ｶﾞｽｹｯﾄ	2	
19	R-402-65004-28		BOLT	ﾎﾞﾙﾄ	4	
20	R-402-00710-12		WASHER	ﾜｯｼｬ	4	
21	NO PART NO.	#*	SEAL,OIL	ｼｰﾙ	1	
22	NO PART NO.	#	RING,SNAP	ｽﾅｯﾌﾟﾘﾝｸﾞ	1	
23	NO PART NO.	#*	SEAL,OIL	ｼｰﾙ	1	
24	03340-00140		O-RING	Oﾘﾝｸﾞ	1	
25	01185-10030		BOLT	ﾎﾞﾙﾄ	2	
A2	239H7-60201		ELBOW-ASSY	ｴﾙﾎﾞｱｯｾﾝ	1	INC.26,27
26	NO PART NO.	#	ELBOW	ｴﾙﾎﾞ	1	
27	03320-00290		O-RING	Oﾘﾝｸﾞ	1	
A3	04150-20404		ELBOW-ASSY	ｴﾙﾎﾞｱｯｾﾝ	1	INC.28,29
28	NO PART NO.	#	ELBOW	ｴﾙﾎﾞ	1	
29	03320-00180		O-RING	Oﾘﾝｸﾞ	1	
A4	234H7-62351		FITTING-ASSY,HOSE	ﾎｰｽﾌｨｯﾃｨﾝｸﾞｱｯｾﾝ	1	INC.30,31
30	NO PART NO.	#	FITTING,HOSE	ﾌｨｯﾃｨﾝｸﾞ	1	
31	03320-00180		O-RING	Oﾘﾝｸﾞ	1	
A5	234H7-62301		FITTING-ASSY,HOSE	ﾎｰｽﾌｨｯﾃｨﾝｸﾞｱｯｾﾝ	1	INC.32,33
32	NO PART NO.	#	FITTING,HOSE	ﾌｨｯﾃｨﾝｸﾞ	1	
33	03320-00180		O-RING	Oﾘﾝｸﾞ	1	
K1	R-403-24323		KIT,SEAL	ｼｰﾙｷｯﾄ	1	INC.15-18,21,23

FIG.173 PUMP UNIT (DIESEL:OIL CLUTCH)

(F5H27150) ﾎﾟﾝﾌﾟﾕﾆｯﾄ

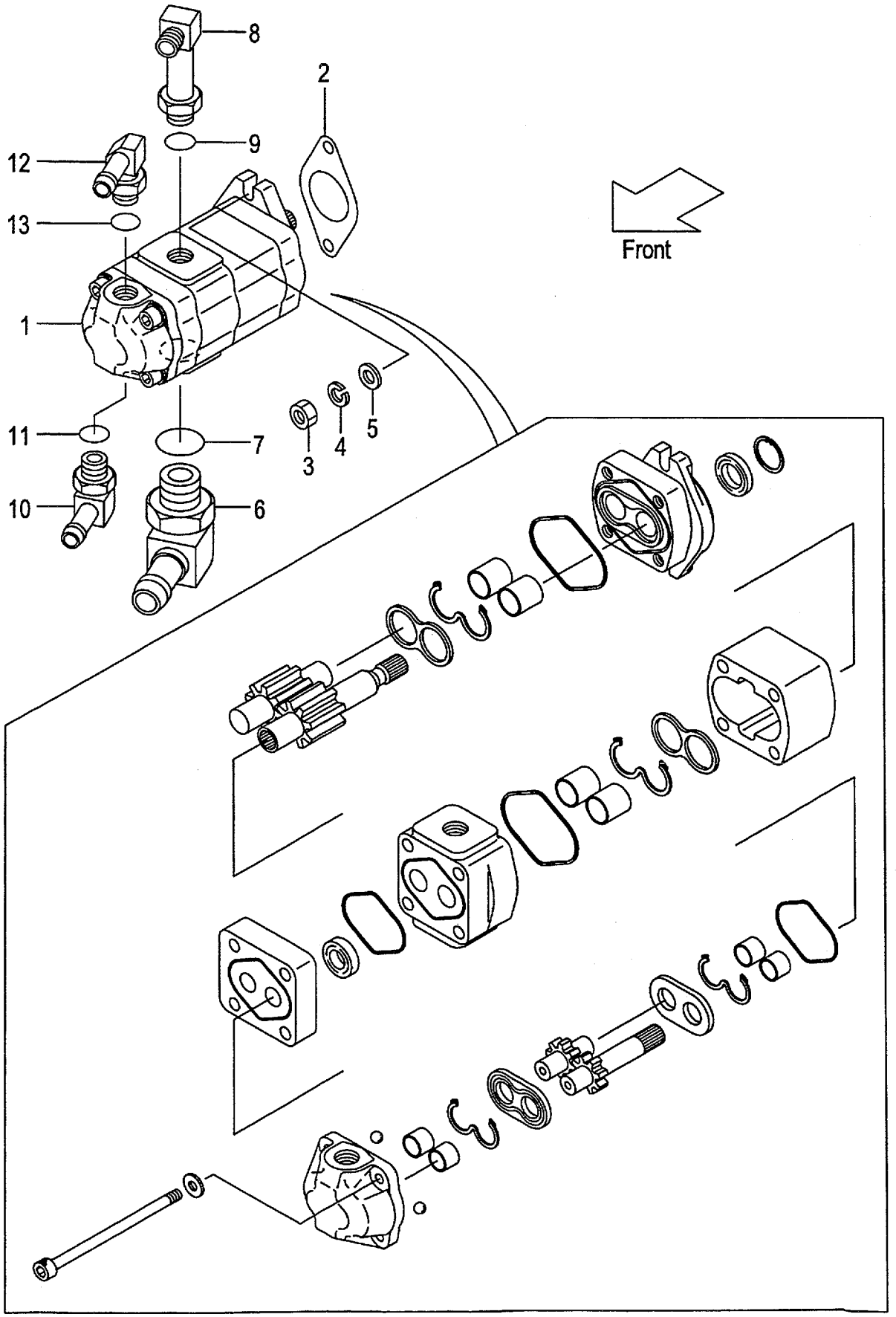

A:FD20W6H FD25W6H

Item No	Part No.	Mark	Description		Req'd	Remarks : Serial No.
1	139H7-10301		PUMP,GEAR	ﾎﾟﾝﾌﾟ	1	
2	23657-12002		PACKING	ﾊﾟｯｷﾝｸﾞ	1	
3	01402-00010		NUT	ﾅｯﾄ	2	
4	02010-00010		WASHER	ﾜｯｼｬ	2	
5	02000-00010		WASHER	ﾜｯｼｬ	2	
A1	239H7-60201		ELBOW-ASSY	ｴﾙﾎﾞｱｯｾﾝ	1	INC.6,7
6	NO PART NO.	#	ELBOW	ｴﾙﾎﾞ	1	
7	03320-00290		O-RING	Oﾘﾝｸﾞ	1	
A2	04150-20404		ELBOW-ASSY	ｴﾙﾎﾞｱｯｾﾝ	1	INC.8,9
8	NO PART NO.	#	ELBOW	ｴﾙﾎﾞ	1	
9	03320-00180		O-RING	Oﾘﾝｸﾞ	1	
A3	234H7-62351		FITTING-ASSY,HOSE	ﾎｰｽﾌｨｯﾃｨﾝｸﾞｱｯｾﾝ	1	INC.10,11
10	NO PART NO.	#	FITTING,HOSE	ﾌｨｯﾃｨﾝｸﾞ	1	
11	03320-00180		O-RING	Oﾘﾝｸﾞ	1	
A4	234H7-62301		FITTING-ASSY,HOSE	ﾎｰｽﾌｨｯﾃｨﾝｸﾞｱｯｾﾝ	1	INC.12,13
12	NO PART NO.	#	FITTING,HOSE	ﾌｨｯﾃｨﾝｸﾞ	1	
13	03320-00180		O-RING	Oﾘﾝｸﾞ	1	

FIG.174 CONTROL VALVE [2SV]

(F5H27310) コントロールバルブ

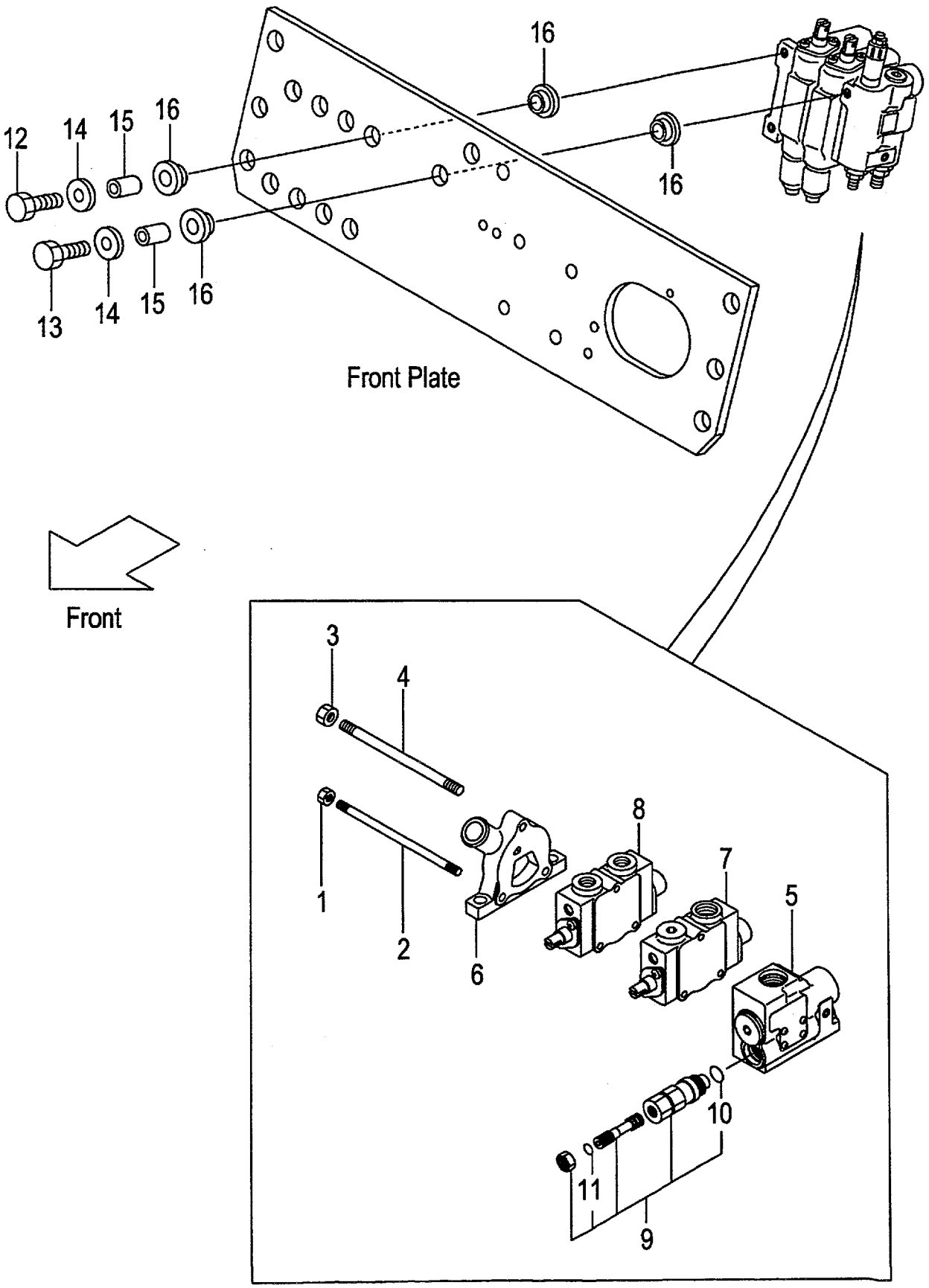

A:FG20C6H FG20T6H FG25C6H FG25T6H C:FD20C6H FD20T6H FD25C6H FD25T6H
B:FG20W6H FG25W6H D:FD20W6H FD25W6H

Item No	Part No.	Mark	Description		Req'd	Remarks : Serial No.
A1	234A7-30202		VALVE-ASSY,CONTROL	ｺﾝﾄﾛｰﾙﾊﾞﾙﾌﾞｱｯｾﾝ	1	INC.1-11
-	534A2-40402		VALVE-ASSY,CONTROL	ｺﾝﾄﾛｰﾙﾊﾞﾙﾌﾞｱｯｾﾝ	1	A,C [EXC][EXE][EXK][EXN][OBT] [EXB/OBT] INC.1-11
-	534A4-60202		VALVE-ASSY,CONTROL	ｺﾝﾄﾛｰﾙﾊﾞﾙﾌﾞｱｯｾﾝ	1	[VLS]
1	B-93118-08652		NUT	ﾅｯﾄ	2	
2	B-21011-31106		ROD,TIE	ﾛｯﾄﾞ	2	
3	B-93128-10082		NUT	ﾅｯﾄ	1	
4	B-21011-31105		ROD,TIE	ﾛｯﾄﾞ	1	
5	B-21013-37344		SECTION,INLET	ｲﾝﾚｯﾄｾｸｼｮﾝ	1	SEE FIG.178
-	B-21013-37349		SECTION,INLET	ｲﾝﾚｯﾄｾｸｼｮﾝ	1	A,C [EXC][EXE][EXK][EXN][OBT] [EXB/OBT]SEE FIG.178
6	B-21011-30134		SECTION,OUTLET	ｱｳﾄﾚｯﾄｾｸｼｮﾝ	1	
7	B-21013-36432		SECTION,SPOOL	ｽﾌﾟｰﾙｾｸｼｮﾝ	1	(LIFT)SEE FIG.179
8	B-21013-36433		SECTION,SPOOL	ｽﾌﾟｰﾙｾｸｼｮﾝ	1	(TILT)SEE FIG.180
9	63130-25614		VALVE,MAIN-RELIEF	ﾊﾞﾙﾌﾞ	1	INC.10,11
10	NO PART NO.	**	O-RING	Oﾘﾝｸﾞ	1	
11	NO PART NO.	**	O-RING	Oﾘﾝｸﾞ	1	
12	216G7-32041		BOLT	ﾎﾞﾙﾄ	2	
13	234A7-32001		BOLT	ﾎﾞﾙﾄ	1	
14	216G7-32021		WASHER,PLANE	ﾜｯｼｬ	3	
15	216G7-32011		COLLAR	ｶﾗｰ	3	
16	216G7-32001		RUBBER,VALVE	ﾗﾊﾞｰ	6	
K1	B-2101A-30016		KIT,SEAL	ｼｰﾙｷｯﾄ	1	INC.10,11

FIG.175 CONTROL VALVE [3SV]

(F5H27320) コントロールバルブ

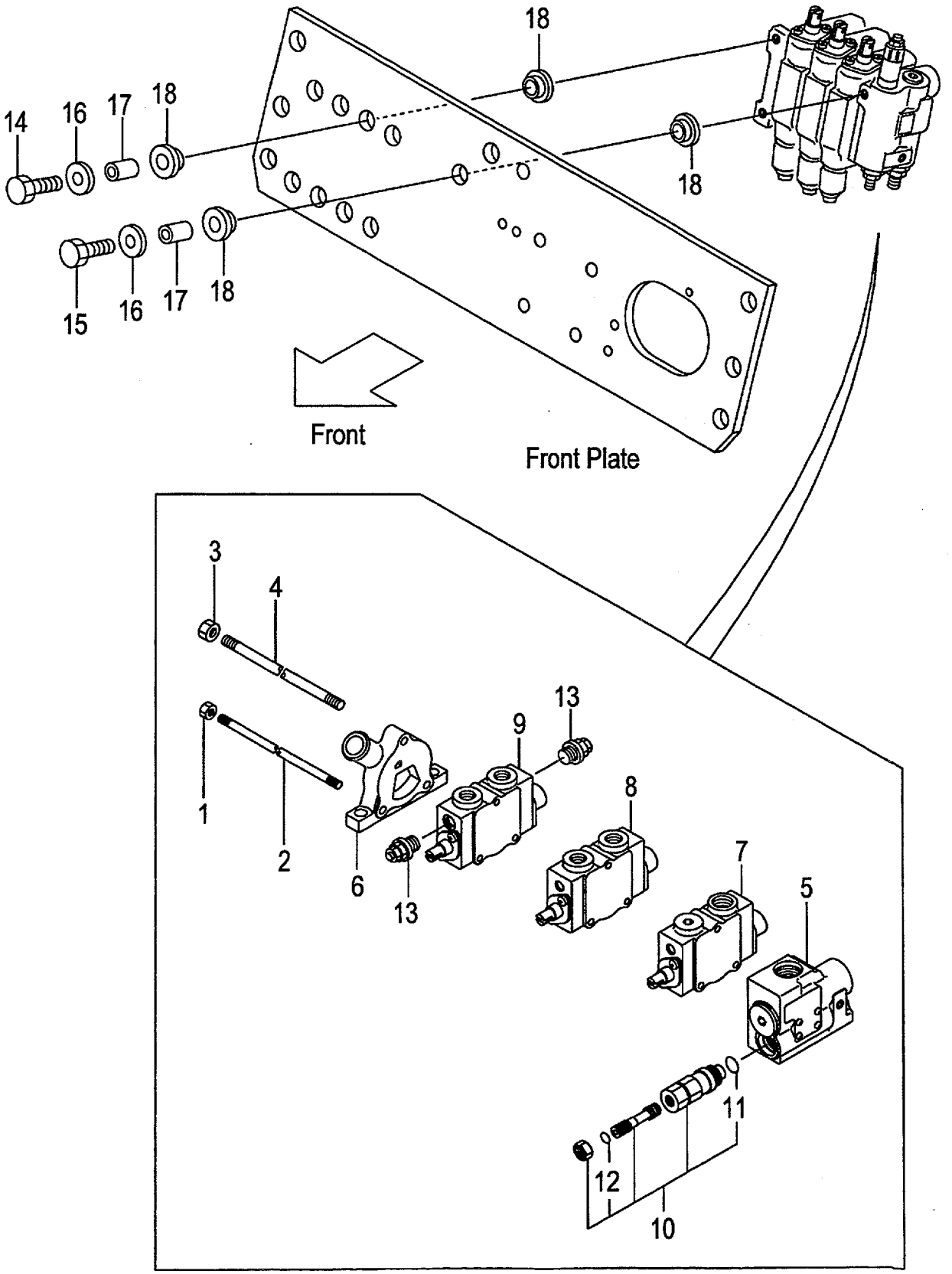

A:FG20C6H FG20T6H FG25C6H FG25T6H C:FD20C6H FD20T6H FD25C6H FD25T6H
B:FG20W6H FG25W6H D:FD20W6H FD25W6H

Item No	Part No.	Mark	Description		Req'd	Remarks : Serial No.
A1	234A7-30302		VALVE-ASSY,CONTROL	ｺﾝﾄﾛｰﾙﾊﾞﾙﾌﾞｱｯｾﾝ	1	[3SV] INC.1-13
-	534A2-40502		VALVE-ASSY,CONTROL	ｺﾝﾄﾛｰﾙﾊﾞﾙﾌﾞｱｯｾﾝ	1	A,C [3SV/EXC&E&K&N][3SV/OBT] INC.1-13
-	534A2-40502		VALVE-ASSY,CONTROL	ｺﾝﾄﾛｰﾙﾊﾞﾙﾌﾞｱｯｾﾝ	1	A,C [3SV/EXB/OBT] INC.1-13
-	534A4-60302		VALVE-ASSY,CONTROL	ｺﾝﾄﾛｰﾙﾊﾞﾙﾌﾞｱｯｾﾝ	1	[3SV/VLS]
1	B-93118-08652		NUT	ﾅｯﾄ	2	[3SV]
2	B-21021-30104		ROD,TIE	ﾛｯﾄﾞ	2	[3SV]
3	B-93128-10082		NUT	ﾅｯﾄ	1	[3SV]
4	B-21021-30103		ROD,TIE	ﾛｯﾄﾞ	1	[3SV]
5	B-21013-37344		SECTION,INLET	ｲﾝﾚｯﾄｾｸｼｮﾝ	1	[3SV]SEE FIG.178
-	B-21013-37349		SECTION,INLET	ｲﾝﾚｯﾄｾｸｼｮﾝ	1	A,C [3SV/EXC&E&K&N][3SV/OBT] SEE FIG.178
-	B-21013-37349		SECTION,INLET	ｲﾝﾚｯﾄｾｸｼｮﾝ	1	A,C [3SV/EXB/OBT]SEE FIG.178
6	B-21011-30134		SECTION,OUTLET	ｱｳﾄﾚｯﾄｾｸｼｮﾝ	1	[3SV]
7	B-21013-36432		SECTION,SPOOL	ｽﾌﾟｰﾙｾｸｼｮﾝ	1	[3SV](LIFT)SEE FIG.179
8	B-21013-36433		SECTION,SPOOL	ｽﾌﾟｰﾙｾｸｼｮﾝ	1	[3SV](TILT)SEE FIG.180
9	B-21013-39701		SECTION,SPOOL	ｽﾌﾟｰﾙｾｸｼｮﾝ	1	[3SV](3RD)SEE FIG.181
10	63130-25614		VALVE,MAIN-RELIEF	ﾊﾞﾙﾌﾞ	1	[3SV] INC.11,12
11	NO PART NO.	#*	O-RING	Oﾘﾝｸﾞ	1	[3SV]
12	NO PART NO.	#*	O-RING	Oﾘﾝｸﾞ	1	[3SV]
13	B-C0003-30301		VALVE,SHUT-OFF	ﾊﾞﾙﾌﾞ	2	[3SV]
14	216G7-32041		BOLT	ﾎﾞﾙﾄ	2	[3SV]
15	234A7-32001		BOLT	ﾎﾞﾙﾄ	1	[3SV]
16	216G7-32021		WASHER,PLANE	ﾜｯｼｬ	3	[3SV]
17	216G7-32011		COLLAR	ｶﾗｰ	3	[3SV]
18	216G7-32001		RUBBER,VALVE	ﾗﾊﾞｰ	6	[3SV]
K1	B-2101A-30016		KIT,SEAL	ｼｰﾙｷｯﾄ	1	[3SV] INC.11,12

FIG.176 CONTROL VALVE [4SV]

(F5H27330) コントロールバルブ

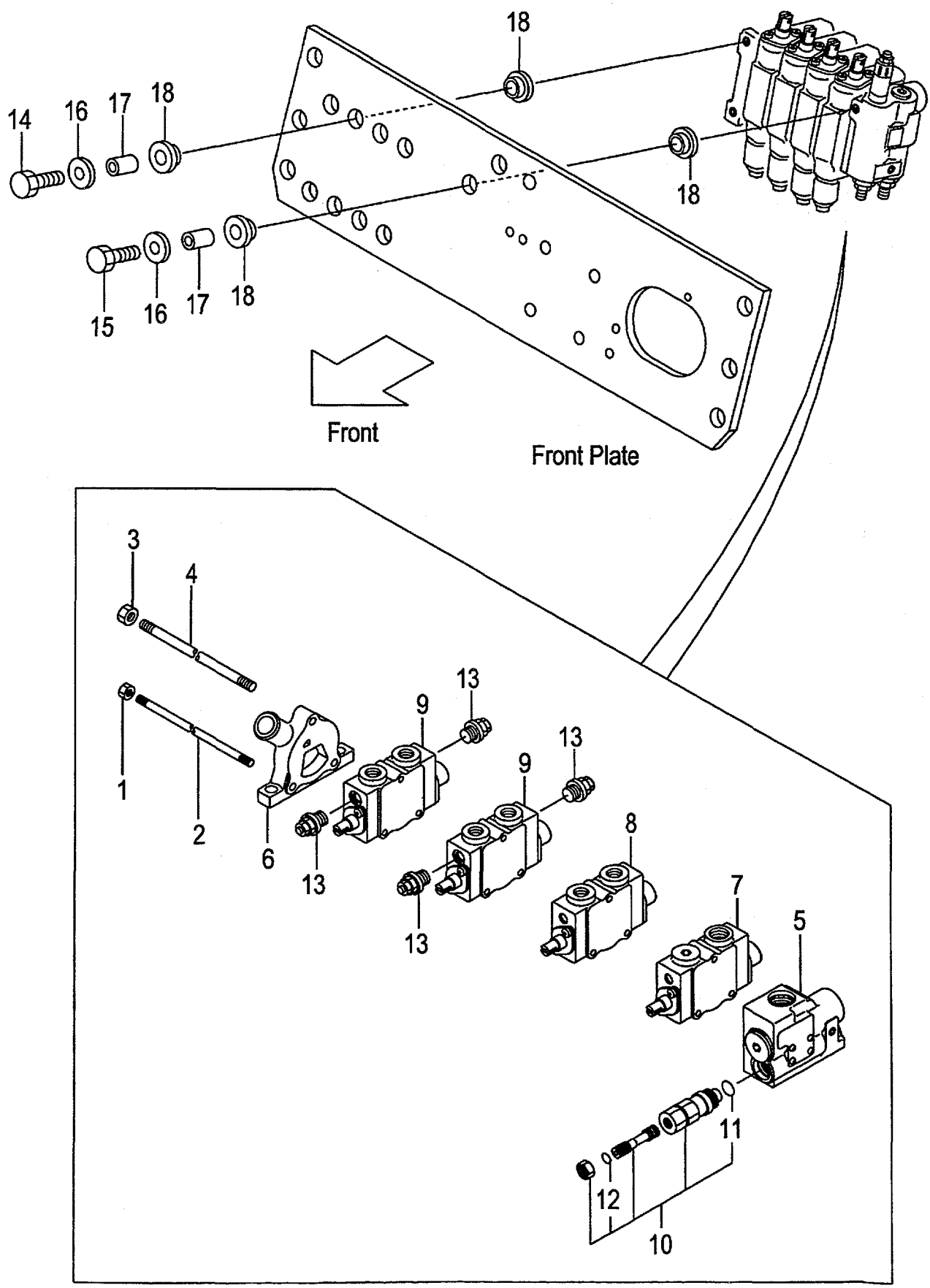

A:FG20C6H FG20T6H FG25C6H FG25T6H C:FD20C6H FD20T6H FD25C6H FD25T6H
B:FG20W6H FG25W6H D:FD20W6H FD25W6H

Item No	Part No.	Mark	Description		Req'd	Remarks : Serial No.
A1	234A7-30402		VALVE-ASSY,CONTROL	ｺﾝﾄﾛｰﾙﾊﾞﾙﾌﾞｱｯｾﾝ	1	[4SV] INC.1-13
-	534A2-40502		VALVE-ASSY,CONTROL	ｺﾝﾄﾛｰﾙﾊﾞﾙﾌﾞｱｯｾﾝ	1	A,C [4SV/EXC&E&K&N][4SV/OBT] INC.1-13
-	534A2-40502		VALVE-ASSY,CONTROL	ｺﾝﾄﾛｰﾙﾊﾞﾙﾌﾞｱｯｾﾝ	1	A,C [4SV/EXB/OBT] INC.1-13
-	534A4-60402		VALVE-ASSY,CONTROL	ｺﾝﾄﾛｰﾙﾊﾞﾙﾌﾞｱｯｾﾝ	1	[4SV/VLS]
1	B-93118-08652		NUT	ﾅｯﾄ	2	[4SV]
2	B-21031-30104		ROD,TIE	ﾛｯﾄﾞ	2	[4SV]
3	B-93128-10082		NUT	ﾅｯﾄ	1	[4SV]
4	B-21031-30103		ROD,TIE	ﾛｯﾄﾞ	1	[4SV]
5	B-21013-37344		SECTION,INLET	ｲﾝﾚｯﾄｾｸｼｮﾝ	1	[4SV]SEE FIG.178
-	B-21013-37349		SECTION,INLET	ｲﾝﾚｯﾄｾｸｼｮﾝ	1	A,C [4SV/EXC&E&K&N][4SV/OBT] SEE FIG.178
-	B-21013-37349		SECTION,INLET	ｲﾝﾚｯﾄｾｸｼｮﾝ	1	A,C [4SV/EXB/OBT]SEE FIG.178
6	B-21011-30134		SECTION,OUTLET	ｱｳﾄﾚｯﾄｾｸｼｮﾝ	1	[4SV]
7	B-21013-36432		SECTION,SPOOL	ｽﾌﾟｰﾙｾｸｼｮﾝ	1	[4SV](LIFT)SEE FIG.179
8	B-21013-36433		SECTION,SPOOL	ｽﾌﾟｰﾙｾｸｼｮﾝ	1	[4SV](TILT)SEE FIG.180
9	B-21013-39701		SECTION,SPOOL	ｽﾌﾟｰﾙｾｸｼｮﾝ	2	[4SV](3RD,4TH)SEE FIG.181
10	63130-25614		VALVE,MAIN-RELIEF	ﾊﾞﾙﾌﾞ	1	[4SV] INC.11,12
11	NO PART NO.	#*	O-RING	Oﾘﾝｸﾞ	1	[4SV]
12	NO PART NO.	#*	O-RING	Oﾘﾝｸﾞ	1	[4SV]
13	B-C0003-30301		VALVE,SHUT-OFF	ﾊﾞﾙﾌﾞ	4	[4SV]
14	216G7-32041		BOLT	ﾎﾞﾙﾄ	2	[4SV]
15	234A7-32001		BOLT	ﾎﾞﾙﾄ	1	[4SV]
16	216G7-32021		WASHER,PLANE	ﾜｯｼｬ	3	[4SV]
17	216G7-32011		COLLAR	ｶﾗｰ	3	[4SV]
18	216G7-32001		RUBBER,VALVE	ﾗﾊﾞｰ	6	[4SV]
K1	B-2101A-30016		KIT,SEAL	ｼｰﾙｷｯﾄ	1	[4SV] INC.11,12

FIG.177 CONTROL VALVE [5SV]

(F5H27340) コントロールバルブ

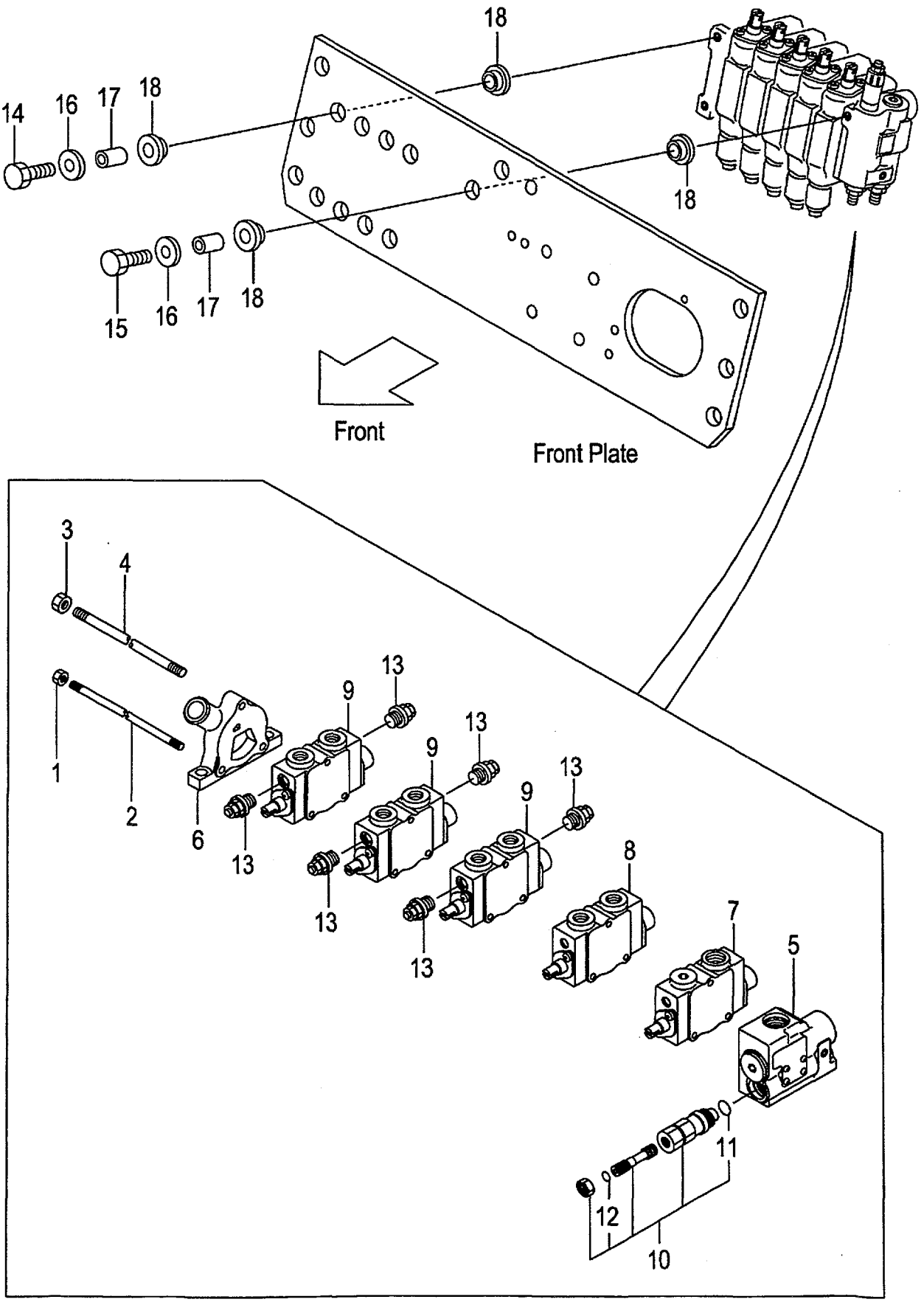

A:FG20C6H FG20T6H FG25C6H FG25T6H C:FD20C6H FD20T6H FD25C6H FD25T6H
B:FG20W6H FG25W6H D:FD20W6H FD25W6H

Item No	Part No.	Mark	Description		Req'd	Remarks : Serial No.
A1	234A7-30502		VALVE-ASSY,CONTROL	ｺﾝﾄﾛｰﾙﾊﾞﾙﾌﾞｱｯｾﾝ	1	[5SV] INC.1-13
-	534A2-40502		VALVE-ASSY,CONTROL	ｺﾝﾄﾛｰﾙﾊﾞﾙﾌﾞｱｯｾﾝ	1	A,C [5SV/EXC&E&K&N][5SV/OBT] INC.1-13
-	534A2-40502		VALVE-ASSY,CONTROL	ｺﾝﾄﾛｰﾙﾊﾞﾙﾌﾞｱｯｾﾝ	1	A,C [5SV/EXB/OBT] INC.1-13
-	534A4-60502		VALVE-ASSY,CONTROL	ｺﾝﾄﾛｰﾙﾊﾞﾙﾌﾞｱｯｾﾝ	1	[5SV/VLS]
1	B-93118-08652		NUT	ﾅｯﾄ	2	[5SV]
2	B-21041-30104		ROD,TIE	ﾛｯﾄﾞ	2	[5SV]
3	B-93128-10082		NUT	ﾅｯﾄ	1	[5SV]
4	B-21041-30103		ROD,TIE	ﾛｯﾄﾞ	1	[5SV]
5	B-21013-37344		SECTION,INLET	ｲﾝﾚｯﾄｾｸｼｮﾝ	1	[5SV]SEE FIG.178
-	B-21013-37349		SECTION,INLET	ｲﾝﾚｯﾄｾｸｼｮﾝ	1	A,C [5SV/EXC&E&K&N][5SV/OBT] SEE FIG.178
-	B-21013-37349		SECTION,INLET	ｲﾝﾚｯﾄｾｸｼｮﾝ	1	A,C [5SV/EXB/OBT]SEE FIG.178
6	B-21011-30134		SECTION,OUTLET	ｱｳﾄﾚｯﾄｾｸｼｮﾝ	1	[5SV]
7	B-21013-36432		SECTION,SPOOL	ｽﾌﾟｰﾙｾｸｼｮﾝ	1	[5SV](LIFT)SEE FIG.179
8	B-21013-36433		SECTION,SPOOL	ｽﾌﾟｰﾙｾｸｼｮﾝ	1	[5SV](TILT)SEE FIG.180
9	B-21013-39701		SECTION,SPOOL	ｽﾌﾟｰﾙｾｸｼｮﾝ	3	[5SV](3RD,4TH,5TH) SEE FIG.181
10	63130-25614		VALVE,MAIN-RELIEF	ﾊﾞﾙﾌﾞ	1	[5SV] INC.11,12
11	NO PART NO.	**	O-RING	Oﾘﾝｸﾞ	1	[5SV]
12	NO PART NO.	**	O-RING	Oﾘﾝｸﾞ	1	[5SV]
13	B-C0003-30301		VALVE,SHUT-OFF	ﾊﾞﾙﾌﾞ	6	[5SV]
14	216G7-32041		BOLT	ﾎﾞﾙﾄ	2	[5SV]
15	234A7-32001		BOLT	ﾎﾞﾙﾄ	1	[5SV]
16	216G7-32021		WASHER,PLANE	ﾜｯｼｬ	3	[5SV]
17	216G7-32011		COLLAR	ｶﾗｰ	3	[5SV]
18	216G7-32001		RUBBER,VALVE	ﾗﾊﾞｰ	6	[5SV]
K1	B-2101A-30016		KIT,SEAL	ｼｰﾙｷｯﾄ	1	[5SV] INC.11,12

FIG.178 INLET SECTION
(F5H27350) インレットセクション

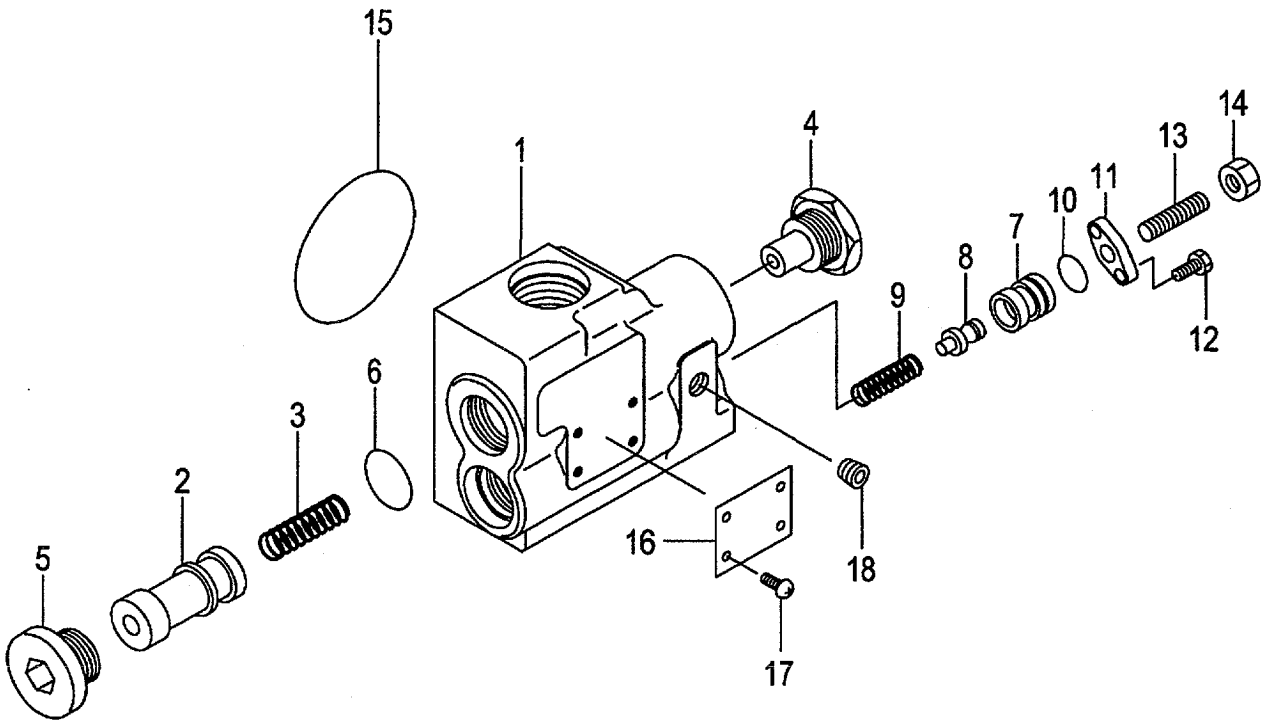

A:FG20C6H FG20T6H FG25C6H FG25T6H C:FD20C6H FD20T6H FD25C6H FD25T6H
B:FG20W6H FG25W6H D:FD20W6H FD25W6H

Item No	Part No.	Mark	Description		Req'd	Remarks : Serial No.
A1	B-21013-37344		SECTION-ASSY,INLET	ｲﾝﾚｯﾄｾｸｼｮﾝｱｯｾﾝ	1	INC.1-18
-	B-21013-37349		SECTION-ASSY,INLET	ｲﾝﾚｯﾄｾｸｼｮﾝｱｯｾﾝ	1	A,C [EXC][EXE][EXK][EXN][OBT] [EXB/OBT] INC.1-18
1	NO PART NO.	#	HOUSING,INLET	ﾊｳｼﾞﾝｸﾞ	1	
2	NO PART NO.	#	SPOOL	ｽﾌﾟｰﾙ	1	
3	B-21731-30802		SPRING	ｽﾌﾟﾘﾝｸﾞ	1	
4	B-21733-40212		CONNECTOR	ｺﾈｸﾀ	1	
5	B-21731-30613		PLUG	ﾌﾟﾗｸﾞ	1	
6	B-95113-02400		O-RING	Oﾘﾝｸﾞ	1	
7	B-21731-30703		HOUSING	ﾊｳｼﾞﾝｸﾞ	1	
8	B-21731-30502		POPPET	ﾎﾟﾍﾟｯﾄ	1	
9	B-21731-30306		SPRING	ｽﾌﾟﾘﾝｸﾞ	1	
-	B-21731-30307		SPRING	ｽﾌﾟﾘﾝｸﾞ	1	A,C [EXC][EXE][EXK][EXN][OBT] [EXB/OBT]
10	B-95111-01200		O-RING	Oﾘﾝｸﾞ	1	
11	B-21731-30406		PLATE	ﾌﾟﾚｰﾄ	1	
12	B-92703-06181		BOLT	ﾎﾞﾙﾄ	2	
13	B-91511-08180		SCREW	ｽｸﾘｭ	1	
14	B-93364-08052		NUT	ﾅｯﾄ	1	
15	B-21001-00106		O-RING	Oﾘﾝｸﾞ	1	
16	NO PART NO.	#	PLATE,NAME	ﾌﾟﾚｰﾄ	1	
17	NO PART NO.	#	SCREW	ｽｸﾘｭ	4	
18	B-97123-01111		PLUG	ﾌﾟﾗｸﾞ	1	

FIG.179 SPOOL SECTION (LIFT)

(F5H27360) スプールセクション

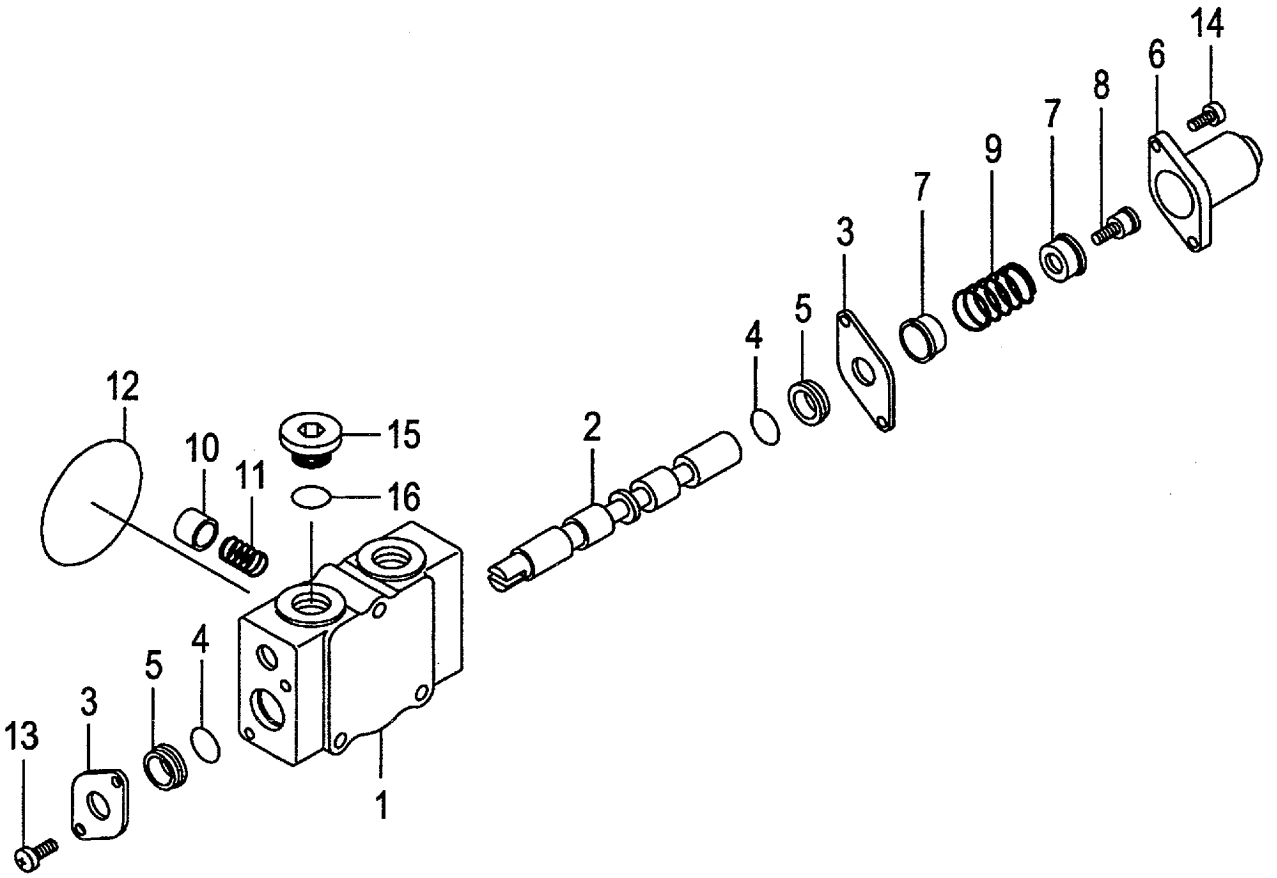

A:FG20C6H FG20T6H FG25C6H FG25T6H C:FD20C6H FD20T6H FD25C6H FD25T6H
B:FG20W6H FG25W6H D:FD20W6H FD25W6H

Item No	Part No.	Mark	Description		Req'd	Remarks : Serial No.
A1	B-21013-36432		SECTION-ASSY,SPOOL	ｽﾌﾟｰﾙｾｸｼｮﾝｱｯｾﾝ	1	INC.1-16
1	NO PART NO.	#	HOUSING,VALVE	ﾊｳｼﾞﾝｸﾞ	1	
2	NO PART NO.	#	SPOOL	ｽﾌﾟｰﾙ	1	
3	B-21011-31702		PLATE	ﾌﾟﾚｰﾄ	2	
4	B-21001-00689		O-RING	Oﾘﾝｸﾞ	2	
5	B-21011-32801		WIPER	ﾜｲﾊﾟ	2	
6	B-21011-31011		CAP	ｷｬｯﾌﾟ	1	
7	B-21011-30702		SEAT	ｼｰﾄ	2	
8	B-21011-30507		SCREW	ｽｸﾘｭ	1	
9	B-21011-30603		SPRING	ｽﾌﾟﾘﾝｸﾞ	1	
10	B-21011-32404		POPPET	ﾎﾟﾍﾟｯﾄ	1	
11	B-21011-30604		SPRING	ｽﾌﾟﾘﾝｸﾞ	1	
12	B-21001-00106		O-RING	Oﾘﾝｸﾞ	1	
13	B-91111-60102		SCREW	ｽｸﾘｭ	2	
14	B-92703-06181		BOLT	ﾎﾞﾙﾄ	2	
15	B-21001-90408		PLUG	ﾌﾟﾗｸﾞ	1	
16	B-95113-01800		O-RING	Oﾘﾝｸﾞ	1	

FIG.180 SPOOL SECTION (TILT)

(F5H27370) スプールセクション

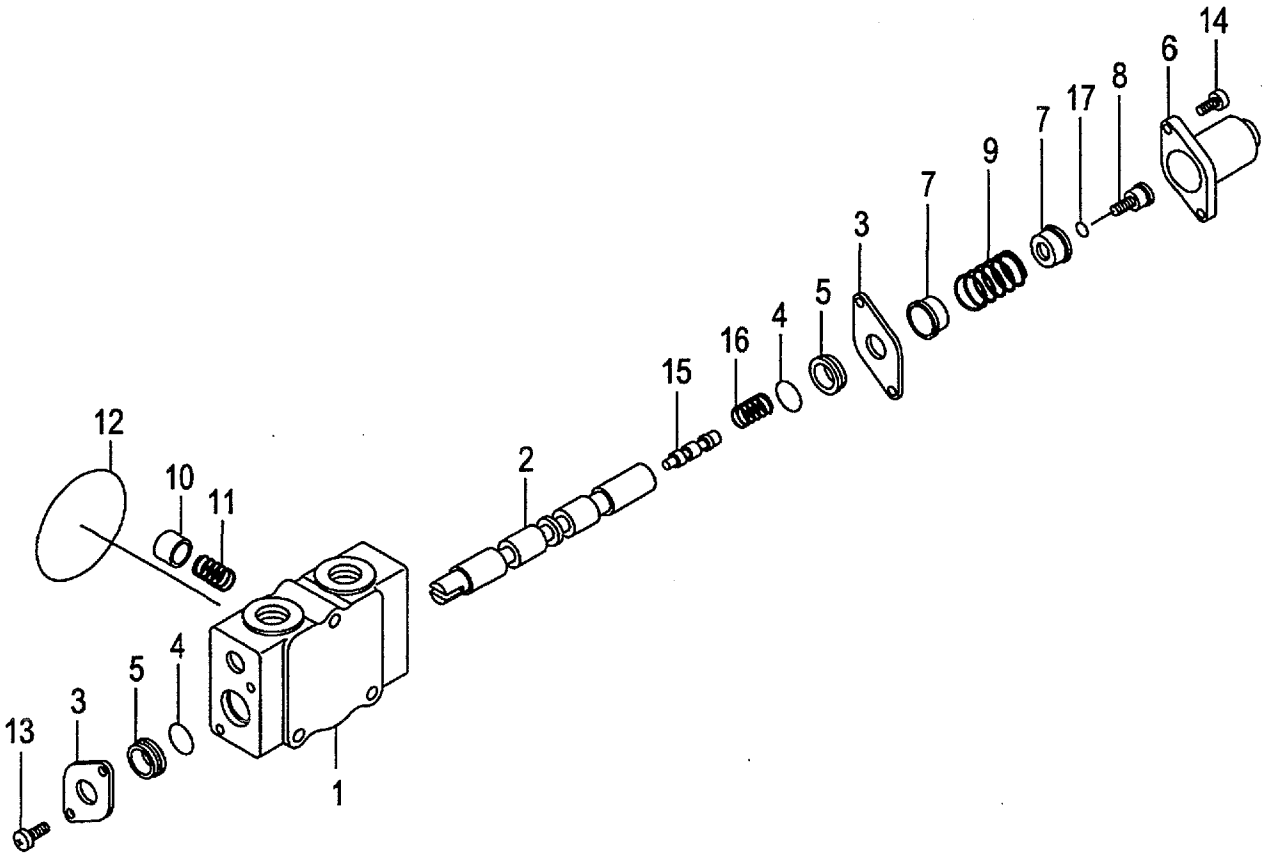

A:FG20C6H FG20T6H FG25C6H FG25T6H C:FD20C6H FD20T6H FD25C6H FD25T6H
B:FG20W6H FG25W6H D:FD20W6H FD25W6H

Item No	Part No.	Mark	Description		Req'd	Remarks : Serial No.
A1	B-21013-36433		SECTION-ASSY,SPOOL	ｽﾌﾟｰﾙｾｸｼｮﾝｱｯｾﾝ	1	INC.1-17
1	NO PART NO.	#	HOUSING,VALVE	ﾊｳｼﾞﾝｸﾞ	1	
2	NO PART NO.	#	SPOOL	ｽﾌﾟｰﾙ	1	
3	B-21011-31702		PLATE	ﾌﾟﾚｰﾄ	2	
4	B-21001-00689		O-RING	Oﾘﾝｸﾞ	2	
5	B-21011-32801		WIPER	ﾜｲﾊﾟ	2	
6	B-21011-31011		CAP	ｷｬｯﾌﾟ	1	
7	B-21011-30702		SEAT	ｼｰﾄ	2	
8	B-21011-30528		SCREW	ｽｸﾘｭ	1	
9	B-21011-30603		SPRING	ｽﾌﾟﾘﾝｸﾞ	1	
10	B-21011-32404		POPPET	ﾎﾟﾍﾟｯﾄ	1	
11	B-21011-30604		SPRING	ｽﾌﾟﾘﾝｸﾞ	1	
12	B-21001-00106		O-RING	Oﾘﾝｸﾞ	1	
13	B-91111-60102		SCREW	ｽｸﾘｭ	2	
14	B-92703-06181		BOLT	ﾎﾞﾙﾄ	2	
15	NO PART NO.	#	VALVE	ﾊﾞﾙﾌﾞ	1	
16	B-21011-30618		SPRING	ｽﾌﾟﾘﾝｸﾞ	1	
17	B-95133-00500		O-RING	Oﾘﾝｸﾞ	1	

FIG.181 SPOOL SECTION [3SV][4SV][5SV]

(F5H27380) スプールセクション

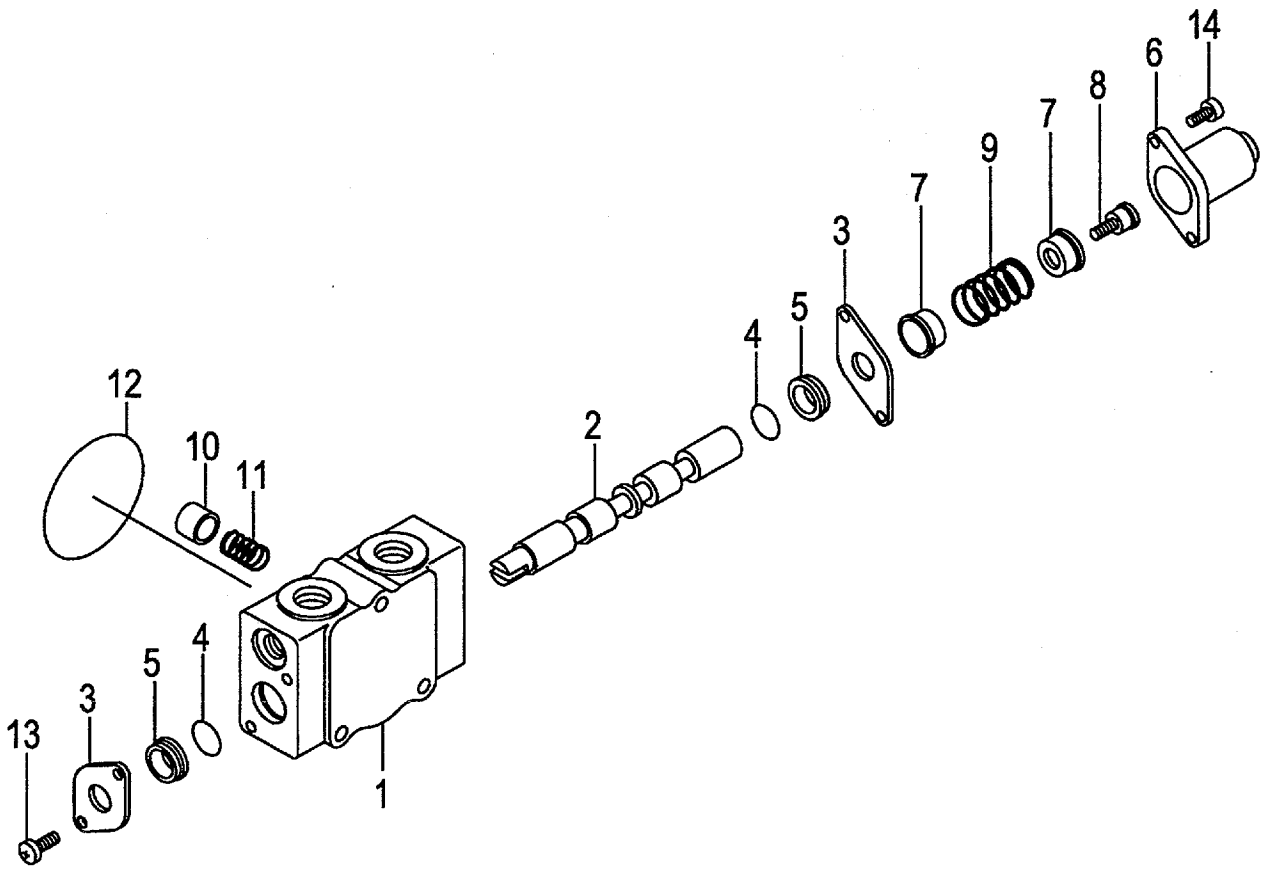

A:FG20C6H FG20T6H FG25C6H FG25T6H C:FD20C6H FD20T6H FD25C6H FD25T6H
B:FG20W6H FG25W6H D:FD20W6H FD25W6H

Item No	Part No.	Mark	Description		Req'd	Remarks : Serial No.
A1	B-21013-39701		SECTION-ASSY,SPOOL	ｽﾌﾟｰﾙｾｸｼｮﾝｱｯｾﾝ	1	[3SV] INC.1-14
-	B-21013-39701		SECTION-ASSY,SPOOL	ｽﾌﾟｰﾙｾｸｼｮﾝｱｯｾﾝ	2	[4SV] INC.1-14
-	B-21013-39701		SECTION-ASSY,SPOOL	ｽﾌﾟｰﾙｾｸｼｮﾝｱｯｾﾝ	3	[5SV] INC.1-14
1	NO PART NO.	#	HOUSING,VALVE	ﾊｳｼﾞﾝｸﾞ	1	[3SV]
-	NO PART NO.	#	HOUSING,VALVE	ﾊｳｼﾞﾝｸﾞ	2	[4SV]
-	NO PART NO.	#	HOUSING,VALVE	ﾊｳｼﾞﾝｸﾞ	3	[5SV]
2	NO PART NO.	#	SPOOL	ｽﾌﾟｰﾙ	1	[3SV]
-	NO PART NO.	#	SPOOL	ｽﾌﾟｰﾙ	2	[4SV]
-	NO PART NO.	#	SPOOL	ｽﾌﾟｰﾙ	3	[5SV]
3	B-21011-31702		PLATE	ﾌﾟﾚｰﾄ	2	[3SV]
-	B-21011-31702		PLATE	ﾌﾟﾚｰﾄ	4	[4SV]
-	B-21011-31702		PLATE	ﾌﾟﾚｰﾄ	6	[5SV]
4	B-21001-00689		O-RING	Oﾘﾝｸﾞ	2	[3SV]
-	B-21001-00689		O-RING	Oﾘﾝｸﾞ	4	[4SV]
-	B-21001-00689		O-RING	Oﾘﾝｸﾞ	6	[5SV]
5	B-21011-32801		WIPER	ﾜｲﾊﾟ	2	[3SV]
-	B-21011-32801		WIPER	ﾜｲﾊﾟ	4	[4SV]
-	B-21011-32801		WIPER	ﾜｲﾊﾟ	6	[5SV]
6	B-21011-31011		CAP	ｷｬｯﾌﾟ	1	[3SV]
-	B-21011-31011		CAP	ｷｬｯﾌﾟ	2	[4SV]
-	B-21011-31011		CAP	ｷｬｯﾌﾟ	3	[5SV]
7	B-21011-30702		SEAT	ｼｰﾄ	2	[3SV]
-	B-21011-30702		SEAT	ｼｰﾄ	4	[4SV]
-	B-21011-30702		SEAT	ｼｰﾄ	6	[5SV]
8	B-21011-30507		SCREW	ｽｸﾘｭ	1	[3SV]
-	B-21011-30507		SCREW	ｽｸﾘｭ	2	[4SV]
-	B-21011-30507		SCREW	ｽｸﾘｭ	3	[5SV]
9	B-21011-30603		SPRING	ｽﾌﾟﾘﾝｸﾞ	1	[3SV]
-	B-21011-30603		SPRING	ｽﾌﾟﾘﾝｸﾞ	2	[4SV]
-	B-21011-30603		SPRING	ｽﾌﾟﾘﾝｸﾞ	3	[5SV]
10	B-21011-32404		POPPET	ﾎﾟﾍﾟｯﾄ	1	[3SV]
-	B-21011-32404		POPPET	ﾎﾟﾍﾟｯﾄ	2	[4SV]
-	B-21011-32404		POPPET	ﾎﾟﾍﾟｯﾄ	3	[5SV]
11	B-21011-30604		SPRING	ｽﾌﾟﾘﾝｸﾞ	1	[3SV]
-	B-21011-30604		SPRING	ｽﾌﾟﾘﾝｸﾞ	2	[4SV]
-	B-21011-30604		SPRING	ｽﾌﾟﾘﾝｸﾞ	3	[5SV]
12	B-21001-00106		O-RING	Oﾘﾝｸﾞ	1	[3SV]
-	B-21001-00106		O-RING	Oﾘﾝｸﾞ	2	[4SV]
-	B-21001-00106		O-RING	Oﾘﾝｸﾞ	3	[5SV]
13	B-91111-60102		SCREW	ｽｸﾘｭ	2	[3SV]
-	B-91111-60102		SCREW	ｽｸﾘｭ	4	[4SV]
-	B-91111-60102		SCREW	ｽｸﾘｭ	6	[5SV]
14	B-92703-06181		BOLT	ﾎﾞﾙﾄ	2	[3SV]
-	B-92703-06181		BOLT	ﾎﾞﾙﾄ	4	[4SV]
-	B-92703-06181		BOLT	ﾎﾞﾙﾄ	6	[5SV]

FIG.182 CONTROL VALVE FITTING

(F5H27390) コントロールバルブフィッティング

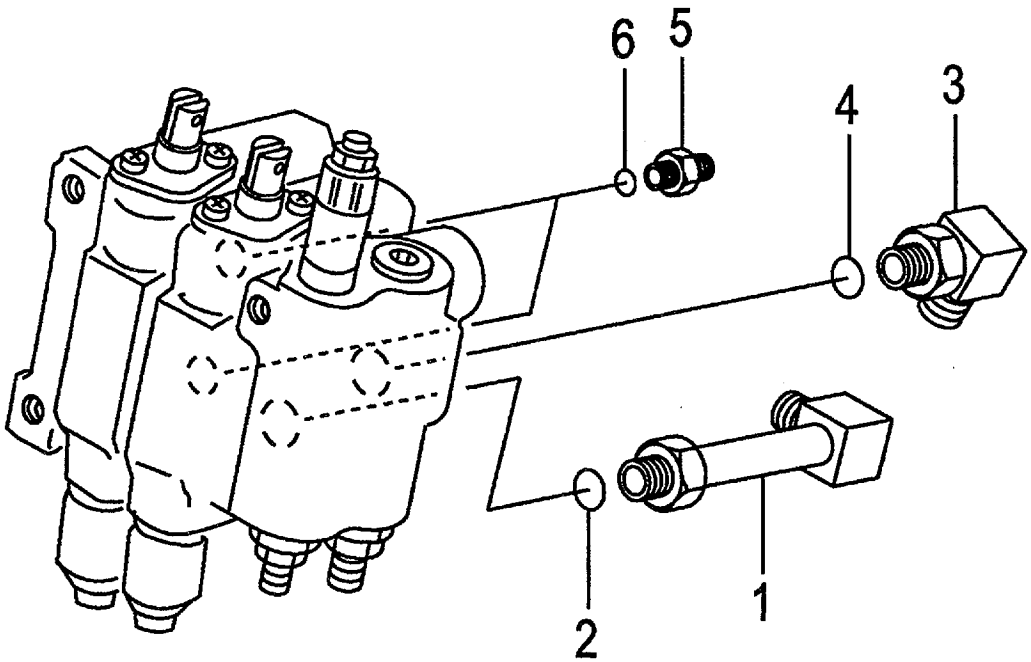

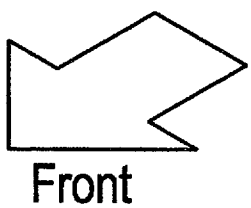

A:FG20C6H FG20T6H FG25C6H FG25T6H FG20W6H FG25W6H
B:FD20C6H FD20T6H FD25C6H FD25T6H FD20W6H FD25W6H

Item No	Part No.	Mark	Description		Req'd	Remarks : Serial No.
A1	22777-60301		ELBOW-ASSY	ｴﾙﾎﾞｱｯｾﾝ	1	INC.1,2
1	NO PART NO.	#	ELBOW	ｴﾙﾎﾞ	1	
2	03320-00180		O-RING	Oﾘﾝｸﾞ	1	
A2	04150-30404		ELBOW-ASSY	ｴﾙﾎﾞｱｯｾﾝ	1	INC.3,4
3	NO PART NO.	#	ELBOW	ｴﾙﾎﾞ	1	
4	03320-00180		O-RING	Oﾘﾝｸﾞ	1	
A3	277H7-60601		NIPPLE-ASSY	ﾆｯﾌﾟﾙｱｯｾﾝ	2	INC.5,6
5	NO PART NO.	#	NIPPLE	ﾆｯﾌﾟﾙ	2	
6	03320-00140		O-RING	Oﾘﾝｸﾞ	2	

FIG.183 VALVE CONTROL [2SV]

(F5H273A0) ﾊﾞﾙﾌﾞｺﾝﾄﾛｰﾙ

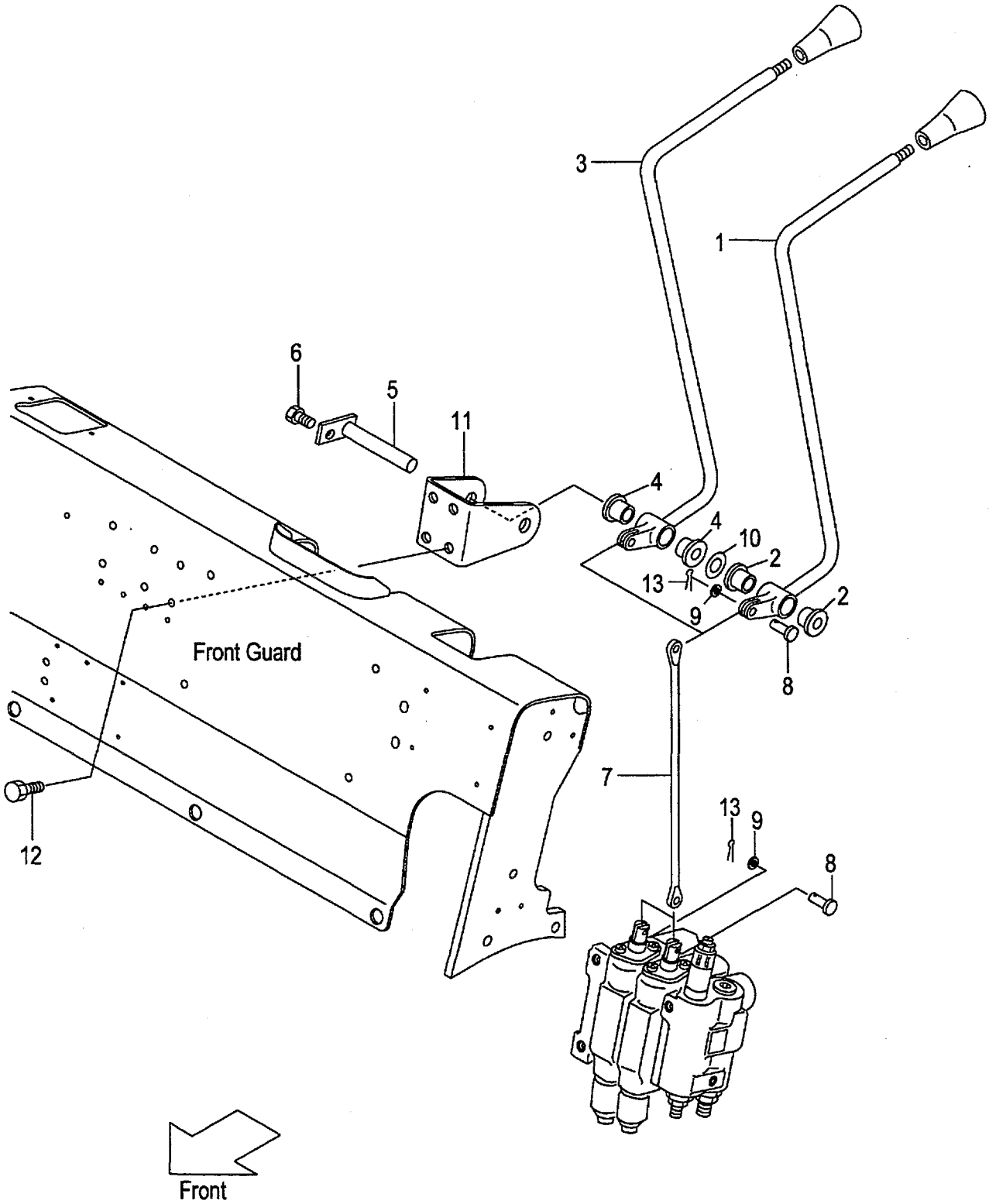

A:FG20C6H FG20T6H FG25C6H FG25T6H FG20W6H FG25W6H
B:FD20C6H FD20T6H FD25C6H FD25T6H FD20W6H FD25W6H

Item No	Part No.	Mark	Description		Req'd	Remarks : Serial No.
A1	216G7-40012		LEVER-ASSY,LIFT	ﾘﾌﾄﾚﾊﾞｰｱｯｾﾝ	1	INC.1,2
1	NO PART NO.	#	LEVER,LIFT	ﾚﾊﾞｰ	1	
2	214A7-42071		BUSHING	ﾌﾞｯｼﾝｸﾞ	2	
A2	216G7-40022		LEVER-ASSY,TILT	ﾃｨﾙﾄﾚﾊﾞｰｱｯｾﾝ	1	INC.3,4
3	NO PART NO.	#	LEVER,TILT	ﾚﾊﾞｰ	1	
4	214A7-42071		BUSHING	ﾌﾞｯｼﾝｸﾞ	2	
5	23647-40041		SHAFT,2SV-LEVER	ｼｬﾌﾄ	1	
-	529F3-70401		SHAFT,2SV-LEVER	ｼｬﾌﾄ	1	[FC]
6	01183-06012		BOLT	ﾎﾞﾙﾄ	1	
7	214A7-42171		JOINT	ｼﾞｮｲﾝﾄ	2	
8	22717-40061		PIN,CLEVIS	ﾋﾟﾝ	4	
9	02000-00005		WASHER	ﾜｯｼｬ	4	
10	22517-40051		SHIM,T-0.2	ｼﾑ	3	
11	216G7-42001		BRACKET,VALVE-LEVER	ﾌﾞﾗｹｯﾄ	1	
12	216H3-92281		BOLT	ﾎﾞﾙﾄ	4	
13	02200-16010		PIN,COTTER	ﾋﾟﾝ	4	

FIG.184 VALVE CONTROL [3SV]

(F5H273B0) ﾊﾞﾙﾌﾞｺﾝﾄﾛｰﾙ

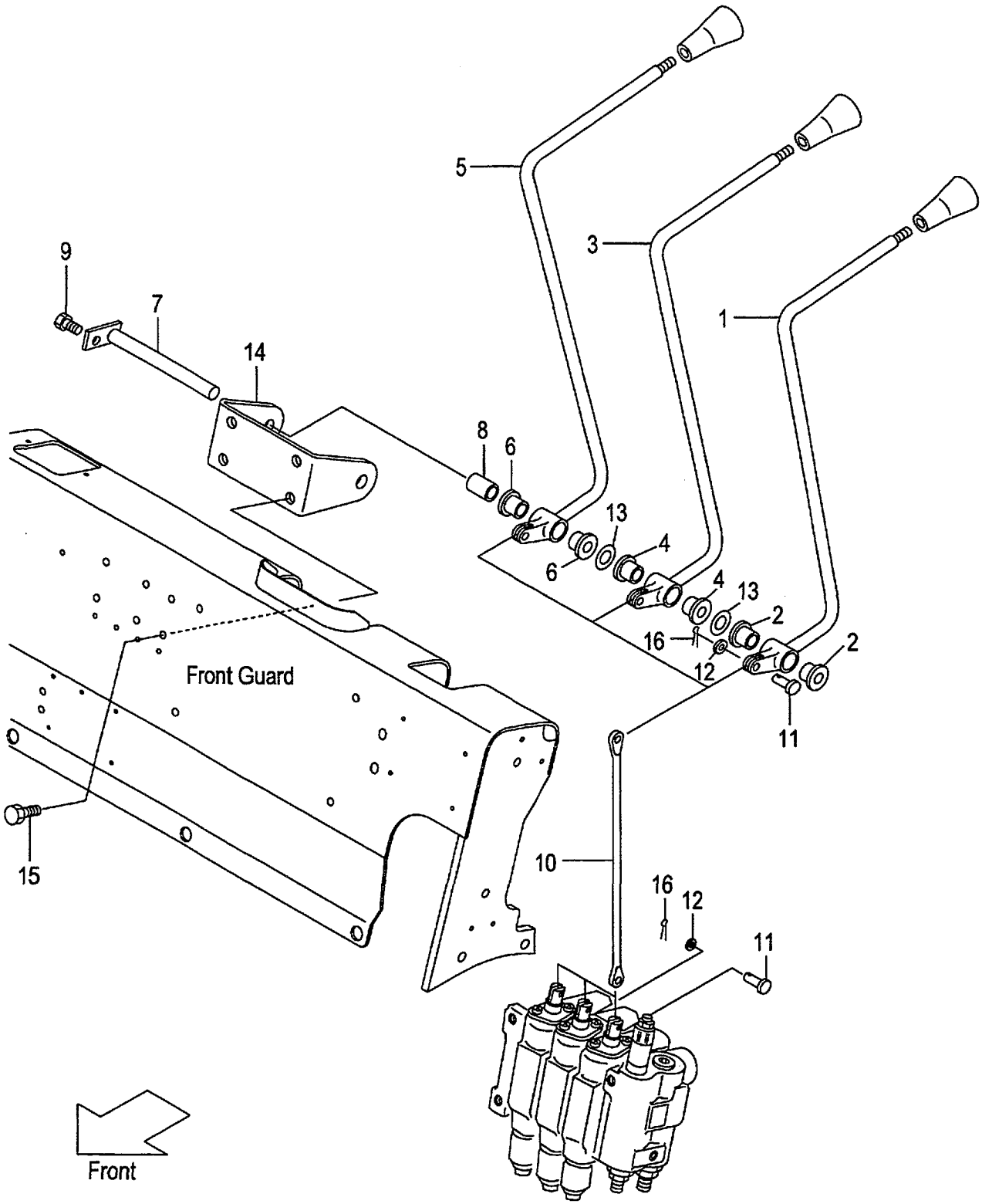

A:FG20C6H FG20T6H FG25C6H FG25T6H FG20W6H FG25W6H
B:FD20C6H FD20T6H FD25C6H FD25T6H FD20W6H FD25W6H

Item No	Part No.	Mark	Description		Req'd	Remarks : Serial No.
A1	216G7-40012		LEVER-ASSY,LIFT	ﾘﾌﾄﾚﾊﾞｰｱｯｾﾝ	1	[3SV] INC.1,2
1	NO PART NO.	#	LEVER,LIFT	ﾚﾊﾞｰ	1	[3SV]
2	214A7-42071		BUSHING	ﾌﾞｯｼﾝｸﾞ	2	[3SV]
A2	216G7-40022		LEVER-ASSY,TILT	ﾃｨﾙﾄﾚﾊﾞｰｱｯｾﾝ	1	[3SV] INC.3,4
3	NO PART NO.	#	LEVER,TILT	ﾚﾊﾞｰ	1	[3SV]
4	214A7-42071		BUSHING	ﾌﾞｯｼﾝｸﾞ	2	[3SV]
A3	216G7-40032		LEVER-ASSY,THIRD	ﾚﾊﾞｰｱｯｾﾝ	1	[3SV] INC.5,6
5	NO PART NO.	#	LEVER,THIRD	ﾚﾊﾞｰ	1	[3SV]
6	214A7-42071		BUSHING	ﾌﾞｯｼﾝｸﾞ	2	[3SV]
7	23457-42041		SHAFT,3&4SV-LEVER	ｼｬﾌﾄ	1	[3SV]
-	529F3-70411		SHAFT,3&4SV-LEVER	ｼｬﾌﾄ	1	[3SV/FC]
8	23657-42131		COLLAR	ｶﾗｰ	1	[3SV]
9	01183-06012		BOLT	ﾎﾞﾙﾄ	1	[3SV]
10	214A7-42171		JOINT	ｼﾞｮｲﾝﾄ	3	[3SV]
11	22717-40061		PIN,CLEVIS	ﾋﾟﾝ	6	[3SV]
12	02000-00005		WASHER	ﾜｯｼｬ	6	[3SV]
13	22517-40051		SHIM,T-0.2	ｼﾑ	6	[3SV]
14	216G7-42011		BRACKET,VALVE-LEVER	ﾌﾞﾗｹｯﾄ	1	[3SV]
15	216H3-92281		BOLT	ﾎﾞﾙﾄ	4	[3SV]
16	02200-16010		PIN,COTTER	ﾋﾟﾝ	6	[3SV]

FIG.185 VALVE CONTROL [4SV]

(F5H273C0) ﾊﾞﾙﾌﾞｺﾝﾄﾛｰﾙ

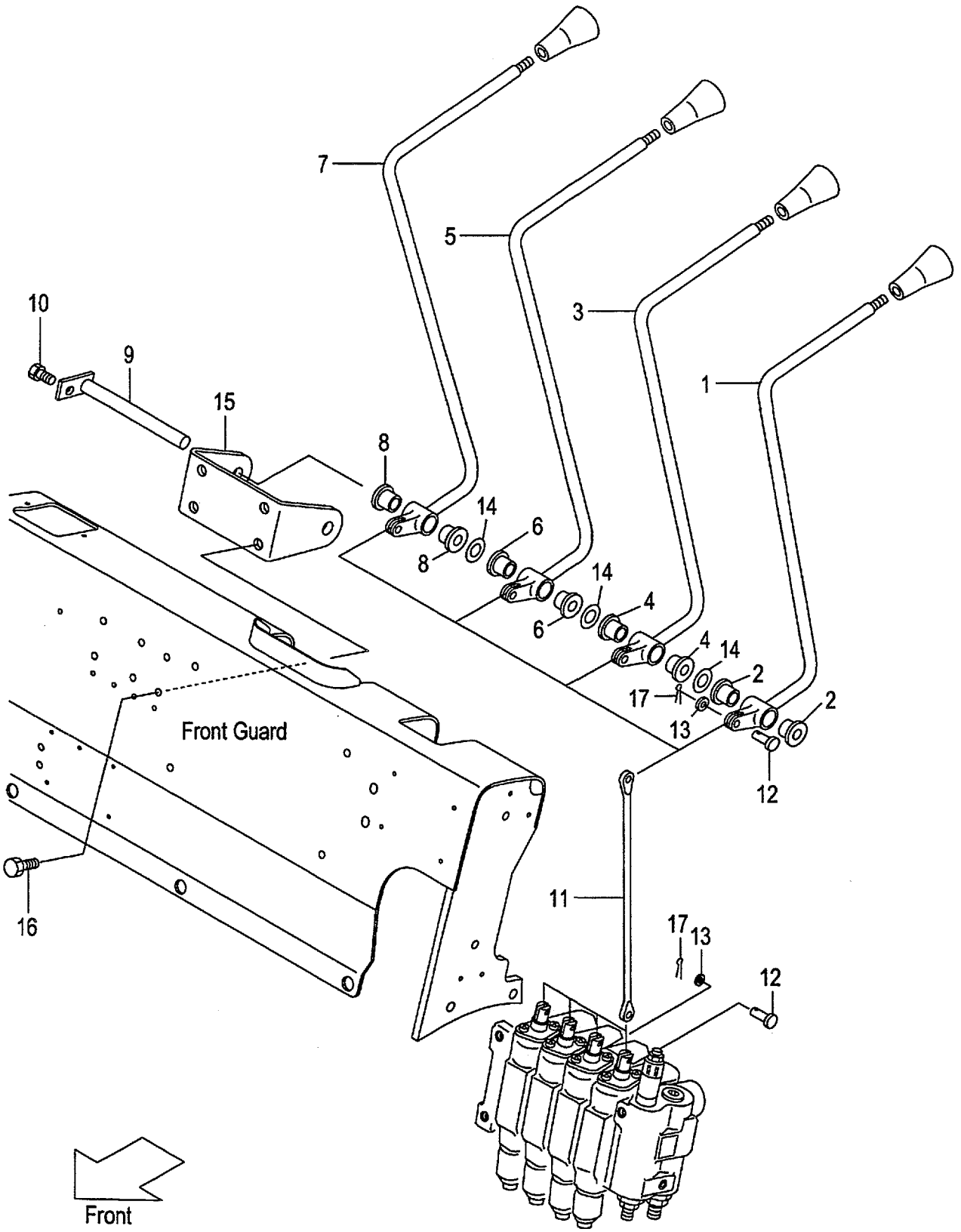

A:FG20C6H FG20T6H FG25C6H FG25T6H FG20W6H FG25W6H
B:FD20C6H FD20T6H FD25C6H FD25T6H FD20W6H FD25W6H

Item No	Part No.	Mark	Description		Req'd	Remarks : Serial No.
A1	216G7-40012		LEVER-ASSY,LIFT	ﾘﾌﾄﾚﾊﾞｰｱｯｾﾝ	1	[4SV] INC.1,2
1	NO PART NO.	#	LEVER,LIFT	ﾚﾊﾞｰ	1	[4SV]
2	214A7-42071		BUSHING	ﾌﾞｯｼﾝｸﾞ	2	[4SV]
A2	216G7-40022		LEVER-ASSY,TILT	ﾃｨﾙﾄﾚﾊﾞｰｱｯｾﾝ	1	[4SV] INC.3,4
3	NO PART NO.	#	LEVER,TILT	ﾚﾊﾞｰ	1	[4SV]
4	214A7-42071		BUSHING	ﾌﾞｯｼﾝｸﾞ	2	[4SV]
A3	216G7-40032		LEVER-ASSY,THIRD	ﾚﾊﾞｰｱｯｾﾝ	1	[4SV] INC.5,6
5	NO PART NO.	#	LEVER,THIRD	ﾚﾊﾞｰ	1	[4SV]
6	214A7-42071		BUSHING	ﾌﾞｯｼﾝｸﾞ	2	[4SV]
A4	216G7-40042		LEVER-ASSY,FOURTH	ﾚﾊﾞｰｱｯｾﾝ	1	[4SV] INC.7,8
7	NO PART NO.	#	LEVER,FOURTH	ﾚﾊﾞｰ	1	[4SV]
8	214A7-42071		BUSHING	ﾌﾞｯｼﾝｸﾞ	2	[4SV]
9	23457-42041		SHAFT,3&4SV-LEVER	ｼｬﾌﾄ	1	[4SV]
-	529F3-70411		SHAFT,3&4SV-LEVER	ｼｬﾌﾄ	1	[4SV/FC]
10	01183-06012		BOLT	ﾎﾞﾙﾄ	1	[4SV]
11	214A7-42171		JOINT	ｼﾞｮｲﾝﾄ	4	[4SV]
12	22717-40061		PIN,CLEVIS	ﾋﾟﾝ	8	[4SV]
13	02000-00005		WASHER	ﾜｯｼｬ	8	[4SV]
14	22517-40051		SHIM,T-0.2	ｼﾑ	9	[4SV]
15	216G7-42011		BRACKET,VALVE-LEVER	ﾌﾞﾗｹｯﾄ	1	[4SV]
16	216H3-92281		BOLT	ﾎﾞﾙﾄ	4	[4SV]
17	02200-16010		PIN,COTTER	ﾋﾟﾝ	8	[4SV]

FIG.186 VALVE CONTROL [5SV]

(F5H273D0) ﾊﾞﾙﾌﾞｺﾝﾄﾛｰﾙ

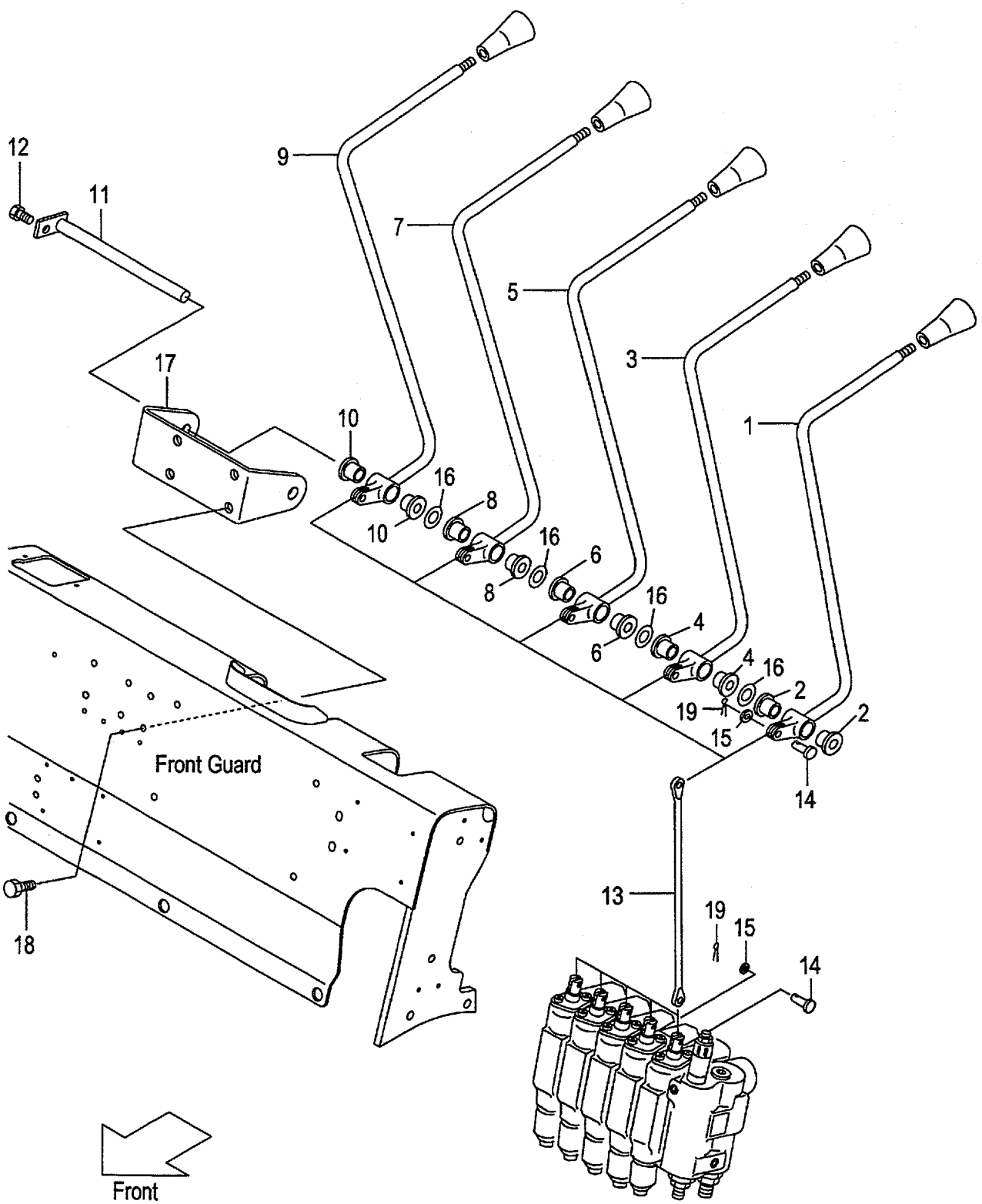

A:FG20C6H FG20T6H FG25C6H FG25T6H FG20W6H FG25W6H
B:FD20C6H FD20T6H FD25C6H FD25T6H FD20W6H FD25W6H

Item No	Part No.	Mark	Description		Req'd	Remarks : Serial No.
A1	216G7-40012		LEVER-ASSY,LIFT	ﾘﾌﾄﾚﾊﾞｰｱｯｾﾝ	1	[5SV] INC.1,2
1	NO PART NO.	#	LEVER,LIFT	ﾚﾊﾞｰ	1	[5SV]
2	214A7-42071		BUSHING	ﾌﾞｯｼﾝｸﾞ	2	[5SV]
A2	216G7-40022		LEVER-ASSY,TILT	ﾃｨﾙﾄﾚﾊﾞｰｱｯｾﾝ	1	[5SV] INC.3,4
3	NO PART NO.	#	LEVER,TILT	ﾚﾊﾞｰ	1	[5SV]
4	214A7-42071		BUSHING	ﾌﾞｯｼﾝｸﾞ	2	[5SV]
A3	216G7-40032		LEVER-ASSY,THIRD	ﾚﾊﾞｰｱｯｾﾝ	1	[5SV] INC.5,6
5	NO PART NO.	#	LEVER,THIRD	ﾚﾊﾞｰ	1	[5SV]
6	214A7-42071		BUSHING	ﾌﾞｯｼﾝｸﾞ	2	[5SV]
A4	216G7-40042		LEVER-ASSY,FOURTH	ﾚﾊﾞｰｱｯｾﾝ	1	[5SV] INC.7,8
7	NO PART NO.	#	LEVER,FOURTH	ﾚﾊﾞｰ	1	[5SV]
8	214A7-42071		BUSHING	ﾌﾞｯｼﾝｸﾞ	2	[5SV]
A5	234A7-40052		LEVER-ASSY,FIFTH	ﾚﾊﾞｰｱｯｾﾝ	1	[5SV] INC.9,10
9	NO PART NO.	#	LEVER,FIFTH	ﾚﾊﾞｰ	1	[5SV]
10	214A7-42071		BUSHING	ﾌﾞｯｼﾝｸﾞ	2	[5SV]
11	55593-02371		SHAFT,5SV-LEVER	ｼｬﾌﾄ	1	[5SV]
-	529F3-70421		SHAFT,5SV-LEVER	ｼｬﾌﾄ	1	[5SV/FC]
12	01183-06012		BOLT	ﾎﾞﾙﾄ	1	[5SV]
13	214A7-42171		JOINT	ｼﾞｮｲﾝﾄ	5	[5SV]
14	22717-40061		PIN,CLEVIS	ﾋﾟﾝ	10	[5SV]
15	02000-00005		WASHER	ﾜｯｼｬ	10	[5SV]
16	22517-40051		SHIM,T-0.2	ｼﾑ	12	[5SV]
17	234A7-42011		BRACKET,VALVE-LEVER	ﾌﾞﾗｹｯﾄ	1	[5SV]
18	216H3-92281		BOLT	ﾎﾞﾙﾄ	4	[5SV]
19	02200-16010		PIN,COTTER	ﾋﾟﾝ	10	[5SV]

FIG.187 VALVE CONTROL KNOB

(F5H273E0) ﾊﾞﾙﾌﾞｺﾝﾄﾛｰﾙﾉﾌﾞ

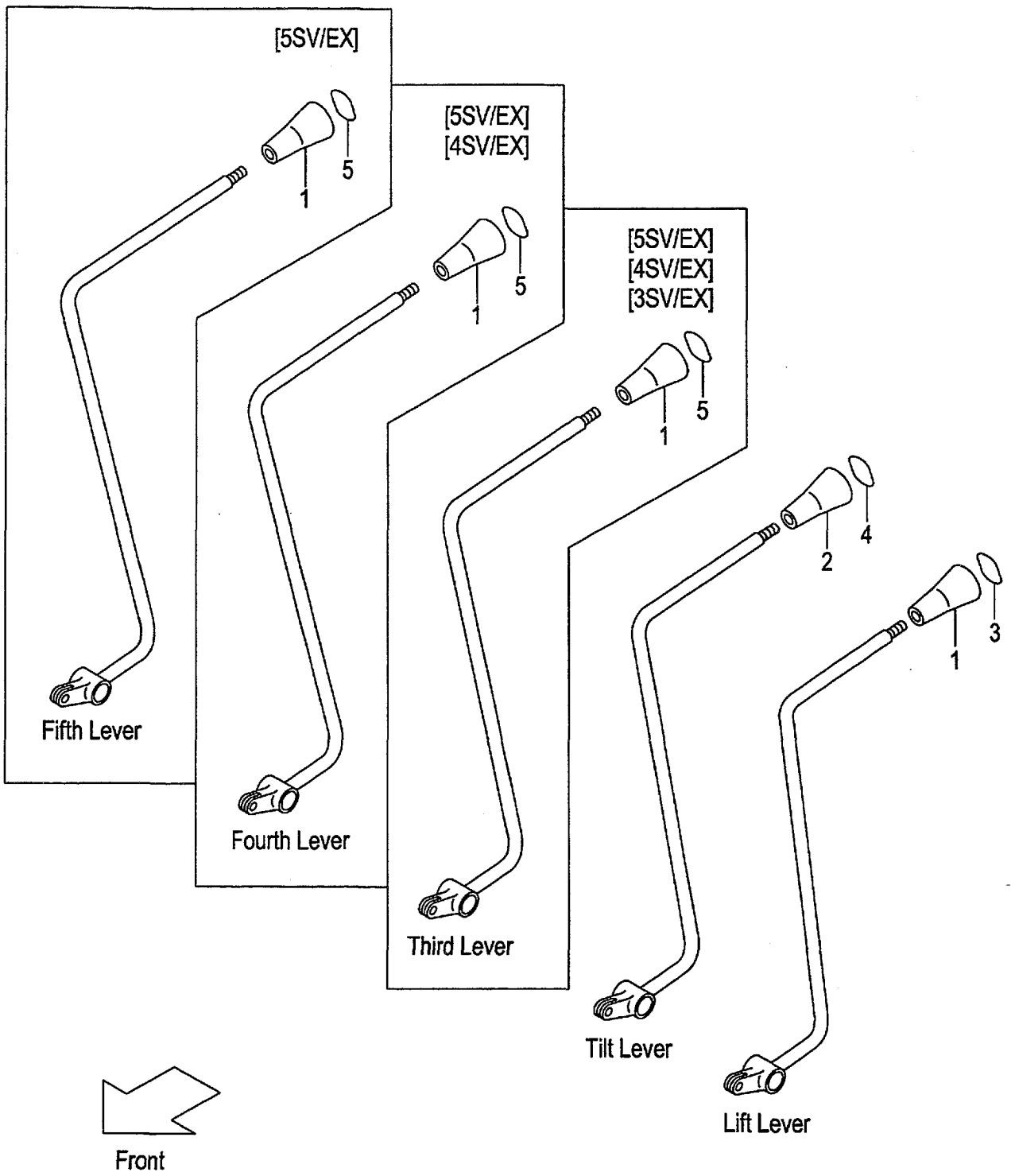

A:FG20C6H FG20T6H FG25C6H FG25T6H C:FD20C6H FD20T6H FD25C6H FD25T6H
B:FG20W6H FG25W6H D:FD20W6H FD25W6H

Item No	Part No.	Mark	Description	Req'd	Remarks : Serial No.
1	214A7-42181		KNOB,VALVE-LEVER ﾉﾌﾞ	1	
-	214A7-42181		KNOB,VALVE-LEVER ﾉﾌﾞ	2	A,C [3SV/EX]
-	214A7-42181		KNOB,VALVE-LEVER ﾉﾌﾞ	3	A,C [4SV/EX]
-	214A7-42181		KNOB,VALVE-LEVER ﾉﾌﾞ	4	A,C [5SV/EX]
2	281E7-42101		KNOB,VALVE-LEVER ﾉﾌﾞ	1	
3	214A7-42191		DECAL,SYMBOL,LIFT ﾃﾞｶﾙ	1	
4	214A7-42201		DECAL,SYMBOL,TILT ﾃﾞｶﾙ	1	
5	514A2-72411		DECAL,SYMBOL,SPACE ﾃﾞｶﾙ	1	A,C [3SV/EX]
-	514A2-72411		DECAL,SYMBOL,SPACE ﾃﾞｶﾙ	2	A,C [4SV/EX]
-	514A2-72411		DECAL,SYMBOL,SPACE ﾃﾞｶﾙ	3	A,C [5SV/EX]

FIG.188 HYDRAULIC LINE (MAIN)(1/3) (GASOLINE:CLUTCH & TOR-CON)

(F5H27610) ﾊｲﾄﾞﾛﾘｯｸﾗｲﾝ(ﾒｲﾝ)(1/3)

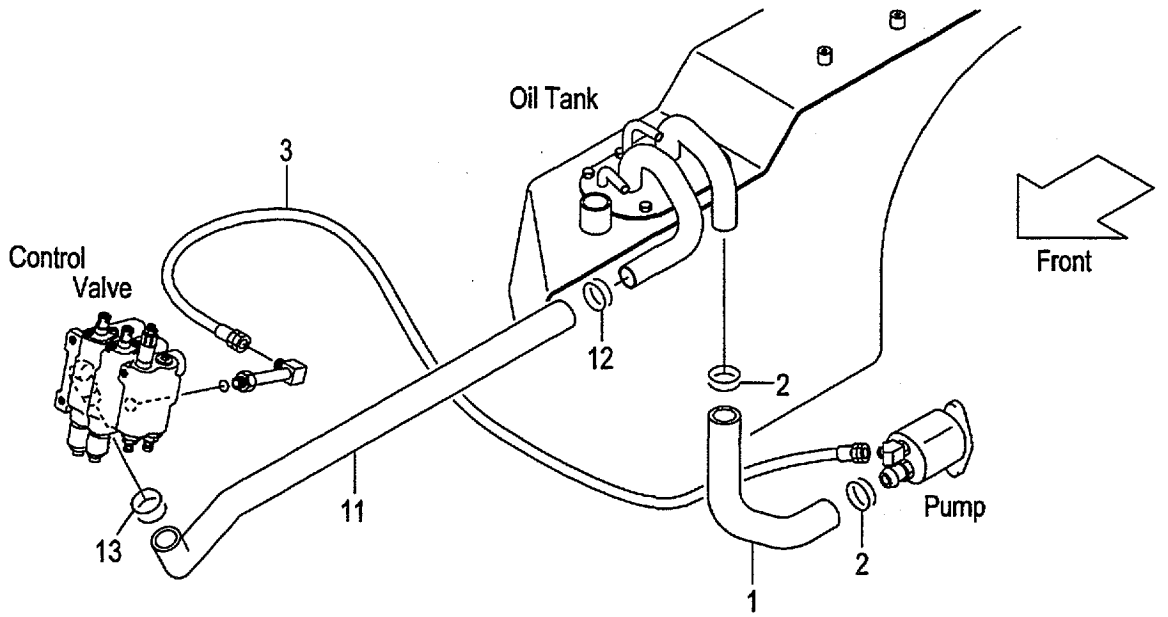

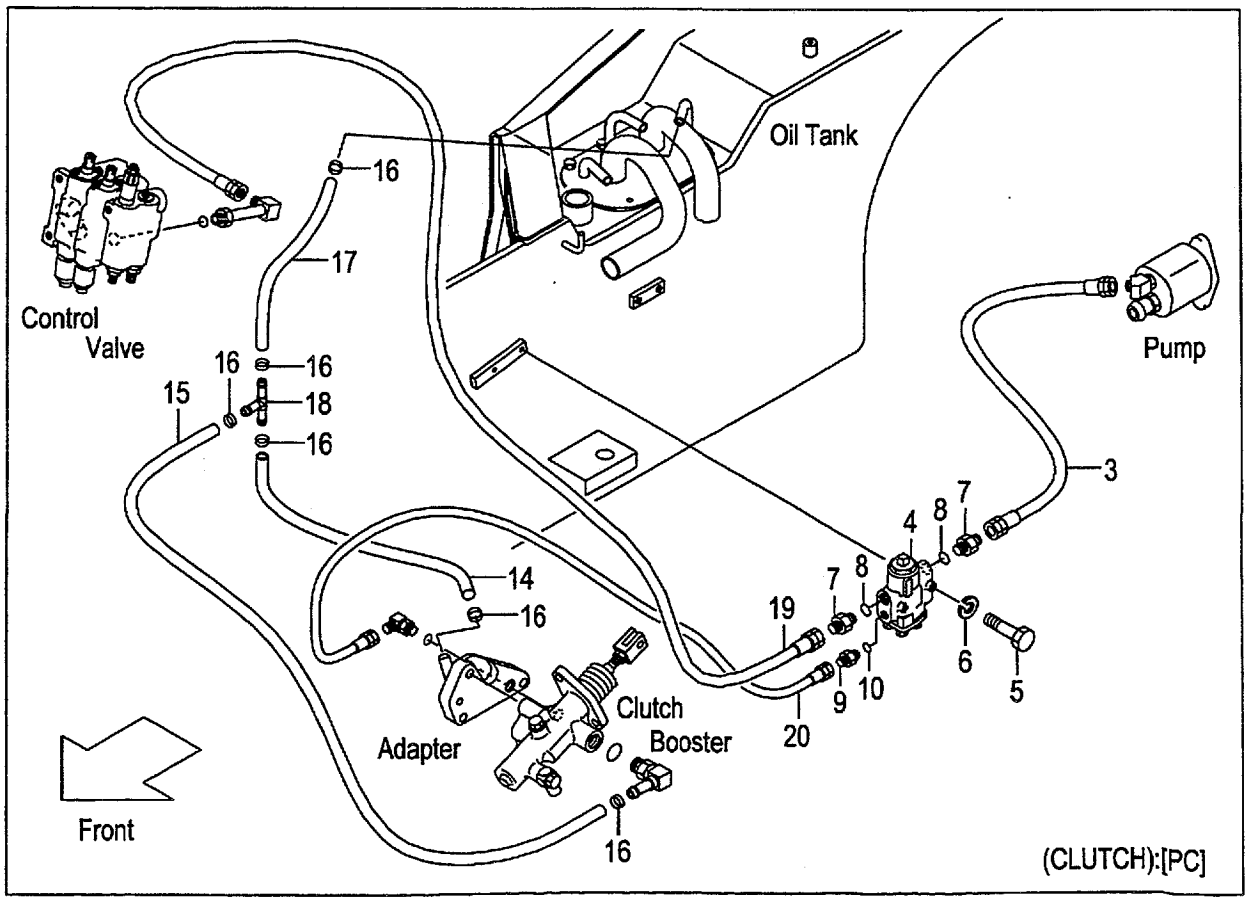

A:FG20C6H FG25C6H
B:FG20T6H FG25T6H

FIG.188
(F5H27610)

Item No	Part No.	Mark	Description		Req'd	Remarks : Serial No.
1	218G7-62111		HOSE,SUCTION	ホース	1	
2	04911-00046		CLIP	クリップ	2	
3	04691-04108		HOSE	ホース	1	
-	04691-04048		HOSE	ホース	1	A [PC]
4	234H7-60301		VALVE,FLOW-PRIORITY	バルブ	1	A [PC]
5	01100-06055		BOLT	ボルト	2	A [PC]
6	02010-00006		WASHER	ワッシャ	2	A [PC]
A1	04134-20404		NIPPLE-ASSY	ニップルアッセン	2	A [PC] INC.7,8
7	NO PART NO.	#	NIPPLE	ニップル	2	A [PC]
8	03320-00180		O-RING	Oリング	2	A [PC]
A2	23657-60311		NIPPLE-ASSY	ニップルアッセン	1	A [PC] INC.9,10
9	NO PART NO.	#	NIPPLE	ニップル	1	A [PC]
10	03320-00140		O-RING	Oリング	1	A [PC]
11	234A7-62101		HOSE,RETURN	ホース	1	
-	234A7-62201		HOSE,RETURN	ホース	1	[4SV][5SV]
12	04911-00044		CLIP	クリップ	1	
13	04911-00040		CLIP	クリップ	1	
14	04710-04102		HOSE	ホース	1	A [PC]
15	04710-04121		HOSE	ホース	1	A [PC]
16	04911-00021		CLIP	クリップ	6	A [PC]
17	04710-04030		HOSE	ホース	1	A [PC]
18	53675-55051		THREE-WAY	スリーウエイ	1	A [PC]
19	04691-04048		HOSE	ホース	1	A [PC]
20	04691-02065		HOSE	ホース	1	A [PC]

FIG.189 HYDRAULIC LINE (MAIN)(1/3) (DIESEL:CLUTCH & TOR-CON)

(F5H27620) ﾊｲﾄﾞﾛﾘｯｸﾗｲﾝ(ﾒｲﾝ)(1/3)

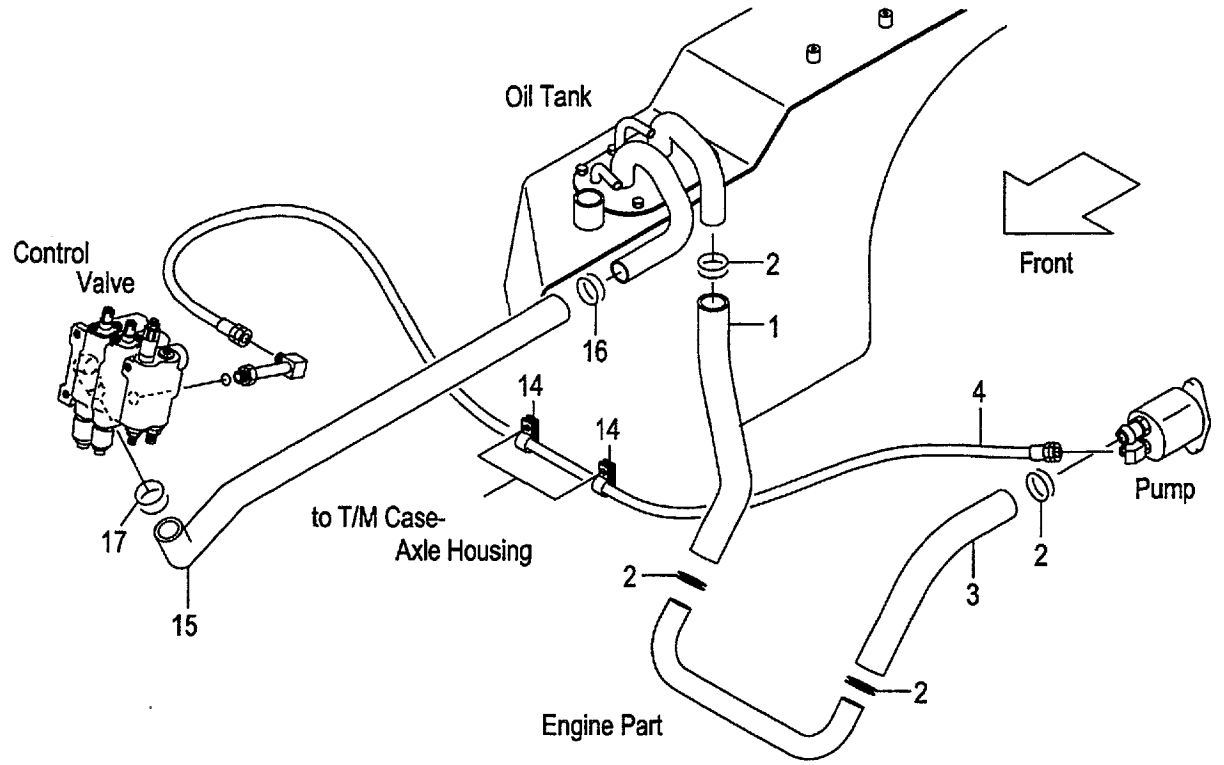

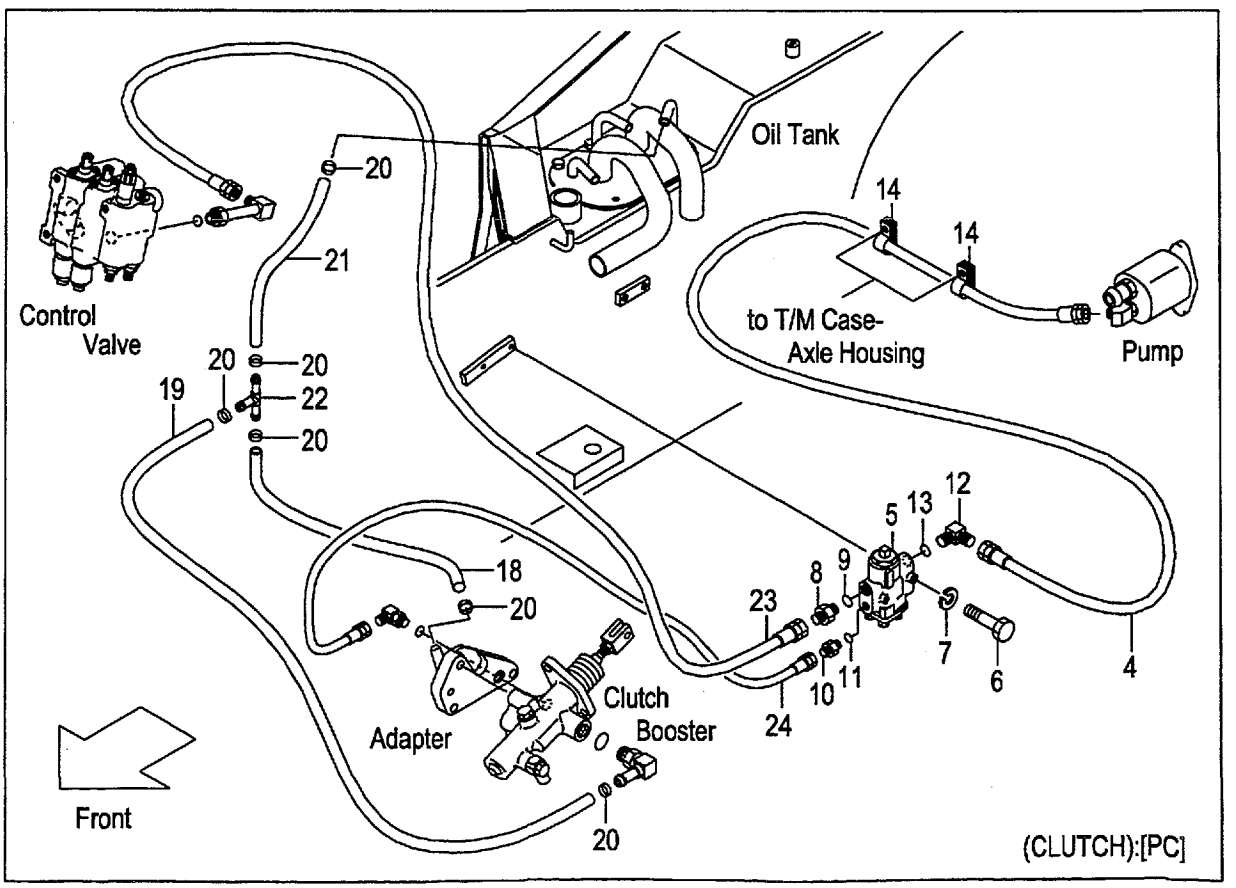

A:FD20C6H FD25C6H
B:FD20T6H FD25T6H

FIG.189
(F5H27620)

Item No	Part No.	Mark	Description		Req'd	Remarks : Serial No.
1	239A7-62001		HOSE,SUCTION	ホース	1	
2	04911-00046		CLIP	クリップ	4	
3	239A7-62011		HOSE,SUCTION	ホース	1	
4	04691-04180		HOSE	ホース	1	
-	04691-04105		HOSE	ホース	1	A [PC]
5	234H7-60301		VALVE,FLOW-PRIORITY	バルブ	1	A [PC]
6	01100-06055		BOLT	ボルト	2	A [PC]
7	02010-00006		WASHER	ワッシャ	2	A [PC]
A1	04134-20404		NIPPLE-ASSY	ニップルアッセン	1	A [PC] INC.8,9
8	NO PART NO.	#	NIPPLE	ニップル	1	A [PC]
9	03320-00180		O-RING	Oリング	1	A [PC]
A2	23657-60311		NIPPLE-ASSY	ニップルアッセン	1	A [PC] INC.10,11
10	NO PART NO.	#	NIPPLE	ニップル	1	A [PC]
11	03320-00140		O-RING	Oリング	1	A [PC]
A3	04150-20404		ELBOW-ASSY	エルボアッセン	1	A [PC] INC.12,13
12	NO PART NO.	#	ELBOW	エルボ	1	A [PC]
13	03320-00180		O-RING	Oリング	1	A [PC]
14	25957-62201		CLIP	クリップ	2	
-	214A2-42331		CLIP	クリップ	2	A [PC]
15	234A7-62101		HOSE,RETURN	ホース	1	
-	234A7-62201		HOSE,RETURN	ホース	1	[4SV][5SV]
16	04911-00044		CLIP	クリップ	1	
17	04911-00040		CLIP	クリップ	1	
18	04710-04102		HOSE	ホース	1	A [PC]
19	04710-04121		HOSE	ホース	1	A [PC]
20	04911-00021		CLIP	クリップ	6	A [PC]
21	04710-04030		HOSE	ホース	1	A [PC]
22	53675-55051		THREE-WAY	スリーウエイ	1	A [PC]
23	04691-04048		HOSE	ホース	1	A [PC]

FIG.189 HYDRAULIC LINE (MAIN)(1/3) (DIESEL:CLUTCH & TOR-CON)

(F5H27620) ﾊｲﾄﾞﾛﾘｯｸﾗｲﾝ(ﾒｲﾝ)(1/3)

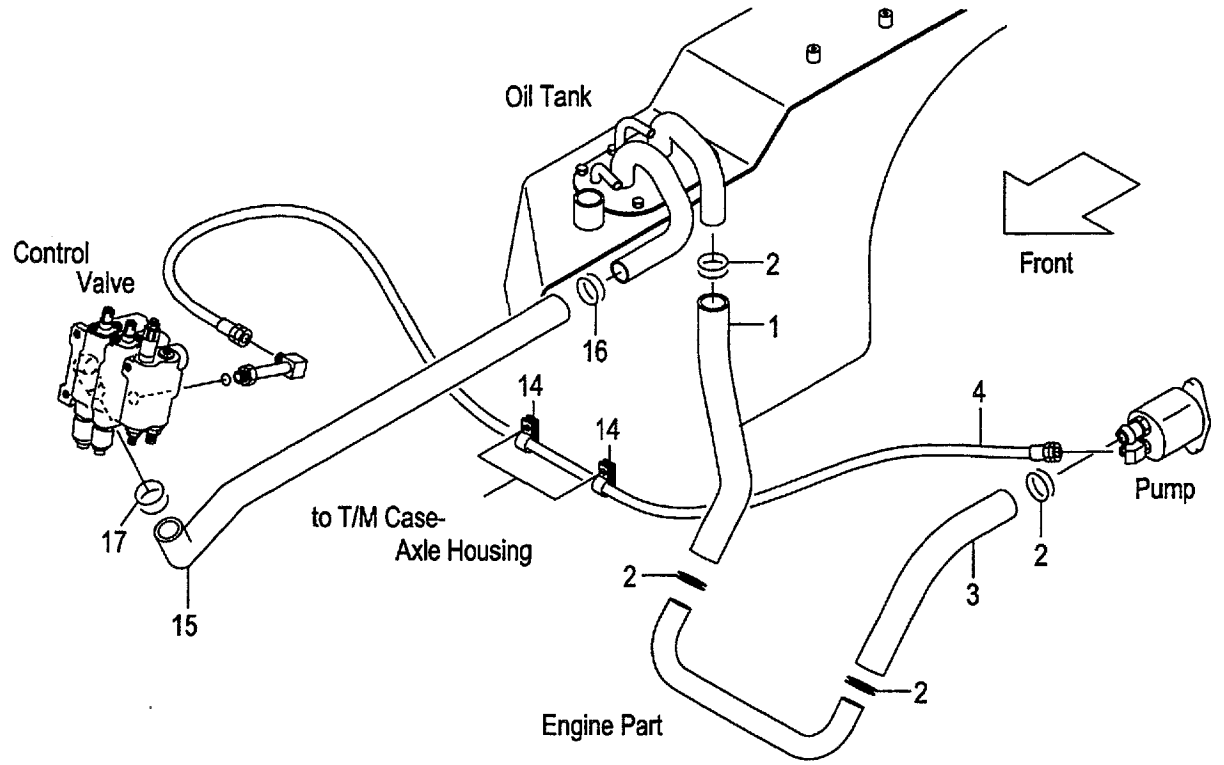

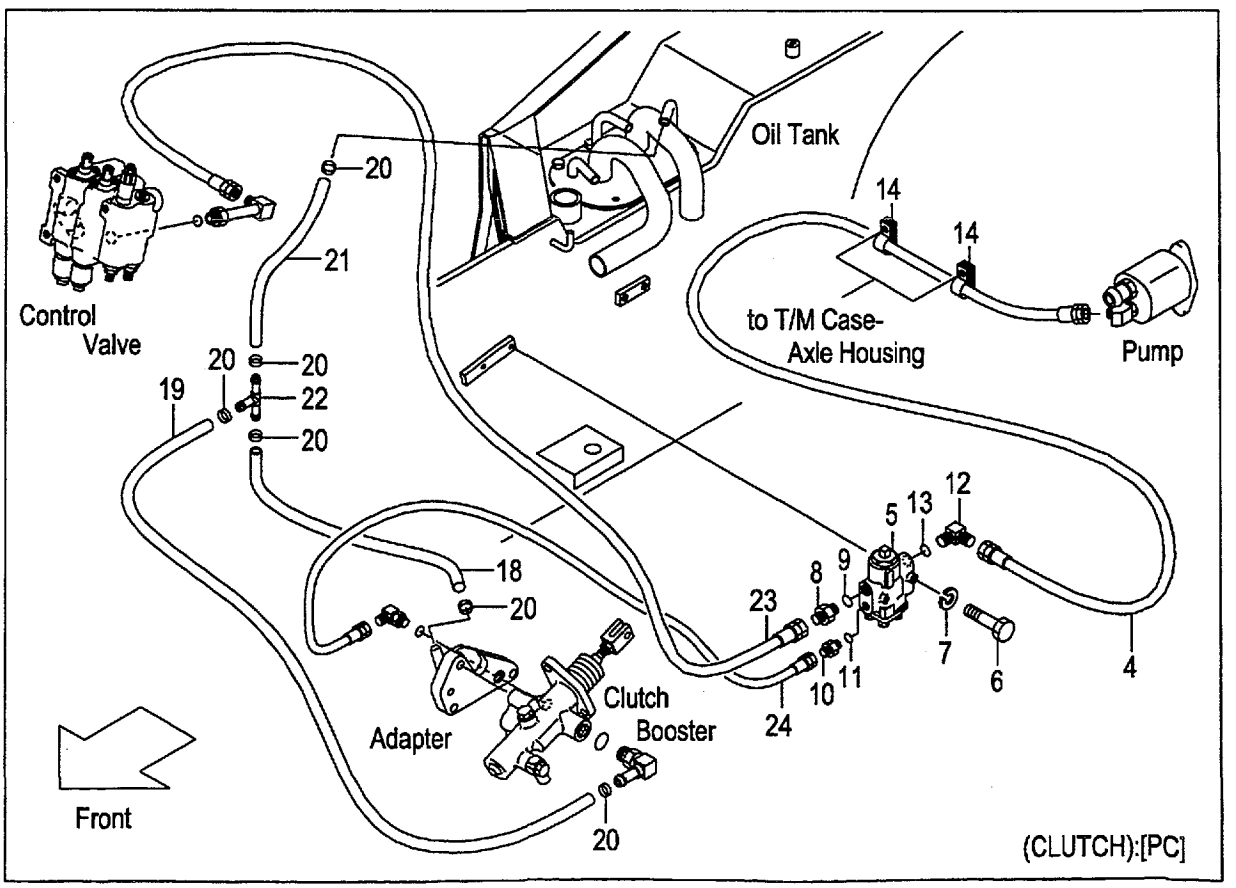

A:FD20C6H FD25C6H
B:FD20T6H FD25T6H

FIG.189
(F5H27620)

Item No	Part No.	Mark	Description	Req'd	Remarks : Serial No.
24	04691-02065		HOSE ホース	1	A [PC]

FIG.190 HYDRAULIC LINE (MAIN)(1/3)(GASOLINE:OIL CLUTCH)

(F5H27640) ﾊｲﾄﾞﾛﾘｯｸﾗｲﾝ(ﾒｲﾝ)(1/3)

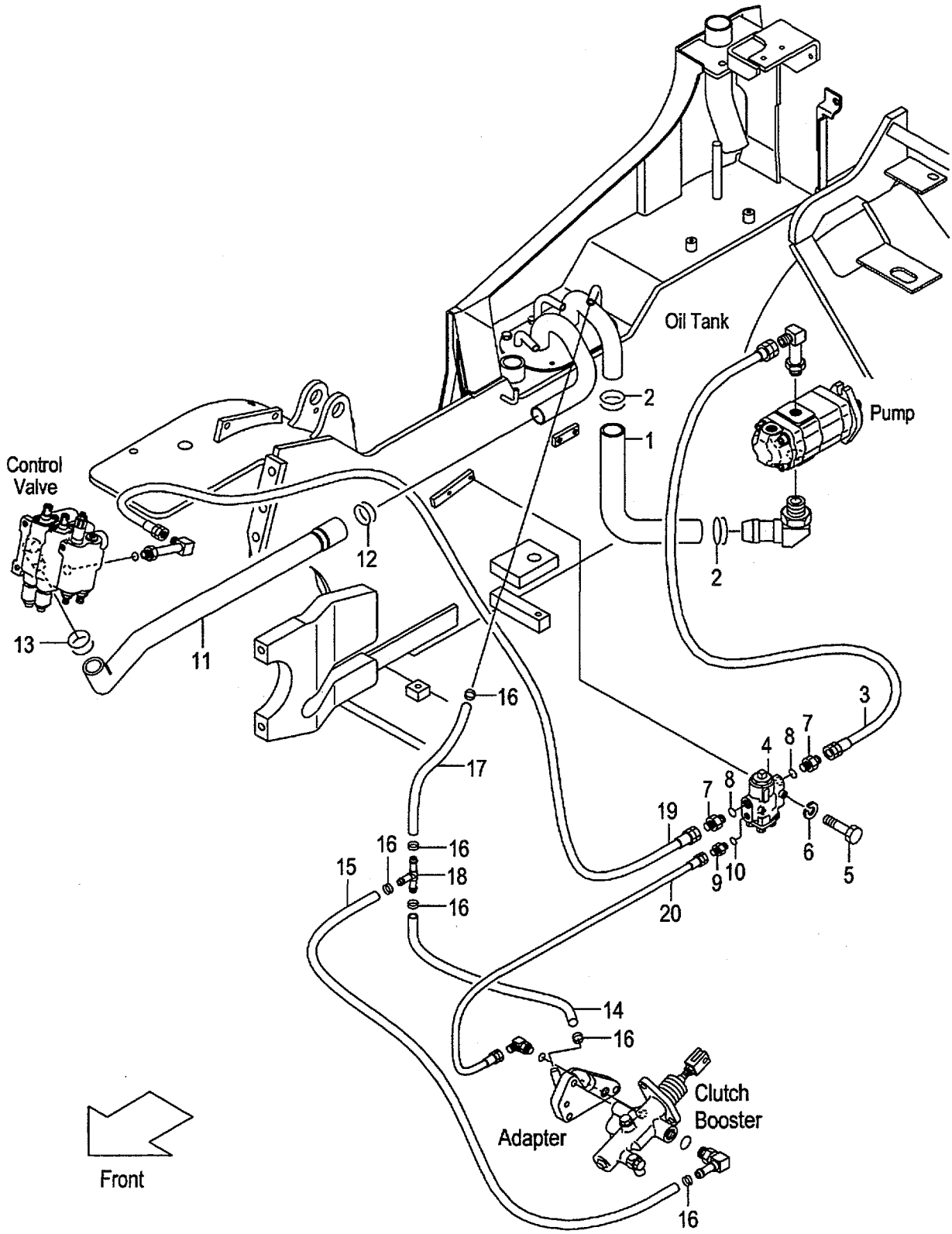

A:FG20W6H FG25W6H

Item No	Part No.	Mark	Description		Req'd	Remarks : Serial No.
1	233H7-62001		HOSE,SUCTION	ﾎｰｽ	1	
2	04911-00046		CLIP	ｸﾘｯﾌﾟ	2	
3	04691-04048		HOSE	ﾎｰｽ	1	
4	234H7-60301		VALVE,FLOW-PRIORITY	ﾊﾞﾙﾌﾞ	1	
5	01100-06055		BOLT	ﾎﾞﾙﾄ	2	
6	02010-00006		WASHER	ﾜｯｼｬ	2	
A1	04134-20404		NIPPLE-ASSY	ﾆｯﾌﾟﾙｱｯｾﾝ	2	INC.7,8
7	NO PART NO.	#	NIPPLE	ﾆｯﾌﾟﾙ	2	
8	03320-00180		O-RING	Oﾘﾝｸﾞ	2	
A2	23657-60311		NIPPLE-ASSY	ﾆｯﾌﾟﾙｱｯｾﾝ	1	INC.9,10
9	NO PART NO.	#	NIPPLE	ﾆｯﾌﾟﾙ	1	
10	03320-00140		O-RING	Oﾘﾝｸﾞ	1	
11	234A7-62101		HOSE,RETURN	ﾎｰｽ	1	
-	234A7-62201		HOSE,RETURN	ﾎｰｽ	1	[4SV][5SV]
12	04911-00044		CLIP	ｸﾘｯﾌﾟ	1	
13	04911-00040		CLIP	ｸﾘｯﾌﾟ	1	
14	04710-04102		HOSE	ﾎｰｽ	1	
15	04710-04121		HOSE	ﾎｰｽ	1	
16	04911-00021		CLIP	ｸﾘｯﾌﾟ	6	
17	04710-04030		HOSE	ﾎｰｽ	1	
18	53675-55051		THREE-WAY	ｽﾘｰｳｴｲ	1	
19	04691-04048		HOSE	ﾎｰｽ	1	
20	04691-02065		HOSE	ﾎｰｽ	1	

FIG.191 HYDRAULIC LINE (MAIN)(1/3)(DIESEL:OIL CLUTCH)

(F5H27650) ﾊｲﾄﾞﾛﾘｯｸﾗｲﾝ(ﾒｲﾝ)(1/3)

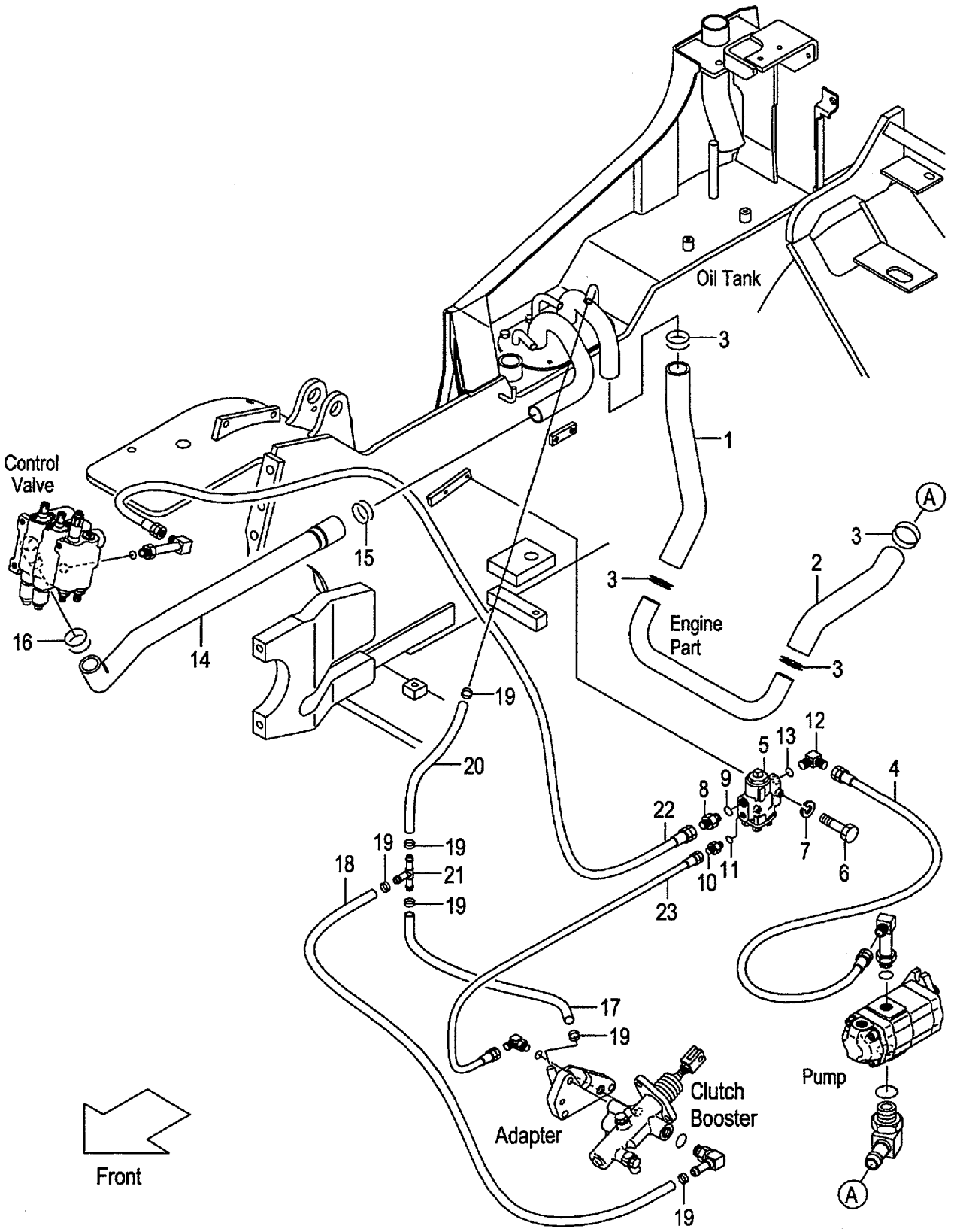

A:FD20W6H FD25W6H

Item No	Part No.	Mark	Description		Req'd	Remarks : Serial No.
1	239A7-62001		HOSE,SUCTION	ﾎｰｽ	1	
2	239H7-62001		HOSE,SUCTION	ﾎｰｽ	1	
3	04911-00046		CLIP	ｸﾘｯﾌﾟ	4	
4	04691-04150		HOSE	ﾎｰｽ	1	
5	234H7-60301		VALVE,FLOW-PRIORITY	ﾊﾞﾙﾌﾞ	1	
6	01100-06055		BOLT	ﾎﾞﾙﾄ	2	
7	02010-00006		WASHER	ﾜｯｼｬ	2	
A1	04134-20404		NIPPLE-ASSY	ﾆｯﾌﾟﾙｱｯｾﾝ	1	INC.8,9
8	NO PART NO.	#	NIPPLE	ﾆｯﾌﾟﾙ	1	
9	03320-00180		O-RING	Oﾘﾝｸﾞ	1	
A2	23657-60311		NIPPLE-ASSY	ﾆｯﾌﾟﾙｱｯｾﾝ	1	INC.10,11
10	NO PART NO.	#	NIPPLE	ﾆｯﾌﾟﾙ	1	
11	03320-00140		O-RING	Oﾘﾝｸﾞ	1	
A3	04150-20404		ELBOW-ASSY	ｴﾙﾎﾞｱｯｾﾝ	1	INC.12,13
12	NO PART NO.	#	ELBOW	ｴﾙﾎﾞ	1	
13	03320-00180		O-RING	Oﾘﾝｸﾞ	1	
14	234A7-62101		HOSE,RETURN	ﾎｰｽ	1	
-	234A7-62201		HOSE,RETURN	ﾎｰｽ	1	[4SV][5SV]
15	04911-00044		CLIP	ｸﾘｯﾌﾟ	1	
16	04911-00040		CLIP	ｸﾘｯﾌﾟ	1	
17	04710-04102		HOSE	ﾎｰｽ	1	
18	04710-04121		HOSE	ﾎｰｽ	1	
19	04911-00021		CLIP	ｸﾘｯﾌﾟ	6	
20	04710-04030		HOSE	ﾎｰｽ	1	
21	53675-55051		THREE-WAY	ｽﾘｰｳｴｲ	1	
22	04691-04048		HOSE	ﾎｰｽ	1	
23	04691-02065		HOSE	ﾎｰｽ	1	

FIG.192 HYDRAULIC LINE (MAIN)(2/3)

(F5H27660) ﾊｲﾄﾞﾛﾘｯｸﾗｲﾝ(ﾒｲﾝ)(2/3)

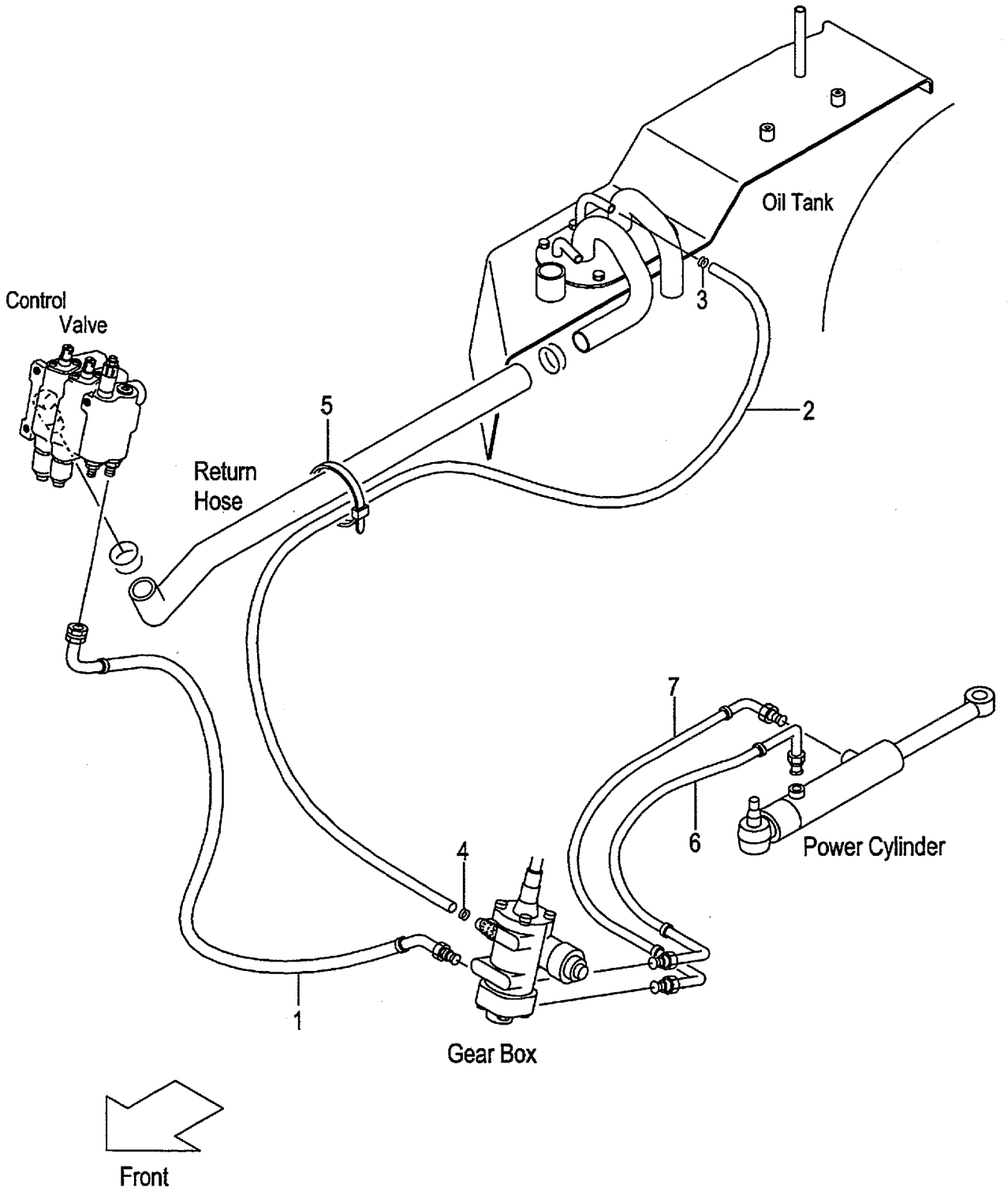

A:FG20C6H FG25C6H D:FD20C6H FD25C6H
B:FG20T6H FG25T6H E:FD20T6H FD25T6H
C:FG20W6H FG25W6H F:FD20W6H FD25W6H

FIG.192
(F5H27660)

Item No	Part No.	Mark	Description		Req'd	Remarks : Serial No.
1	214A7-62131		HOSE	ﾎｰｽ	1	
2	04710-04140		HOSE	ﾎｰｽ	1	
3	04911-00021		CLIP	ｸﾘｯﾌﾟ	1	
4	04911-00020		CLIP	ｸﾘｯﾌﾟ	1	
5	27042-42312		BAND,CABLE	ﾊﾞﾝﾄﾞ	2	
6	239A7-60301		HOSE,PS,FRONT	ﾎｰｽ	1	A,B,D,E
-	239H7-60401		HOSE,PS,FRONT	ﾎｰｽ	1	C,F
-	239H7-60401		HOSE,PS,FRONT	ﾎｰｽ	1	A,D
						[PC]
7	239A7-60311		HOSE,PS,REAR	ﾎｰｽ	1	

FIG.193 HYDRAULIC LINE (MAIN)(2/3) [EXC][EXE][EXK][EXN][OBT]

(F5H276A0) ﾊｲﾄﾞﾛﾘｯｸﾗｲﾝ(ﾒｲﾝ)(2/3)

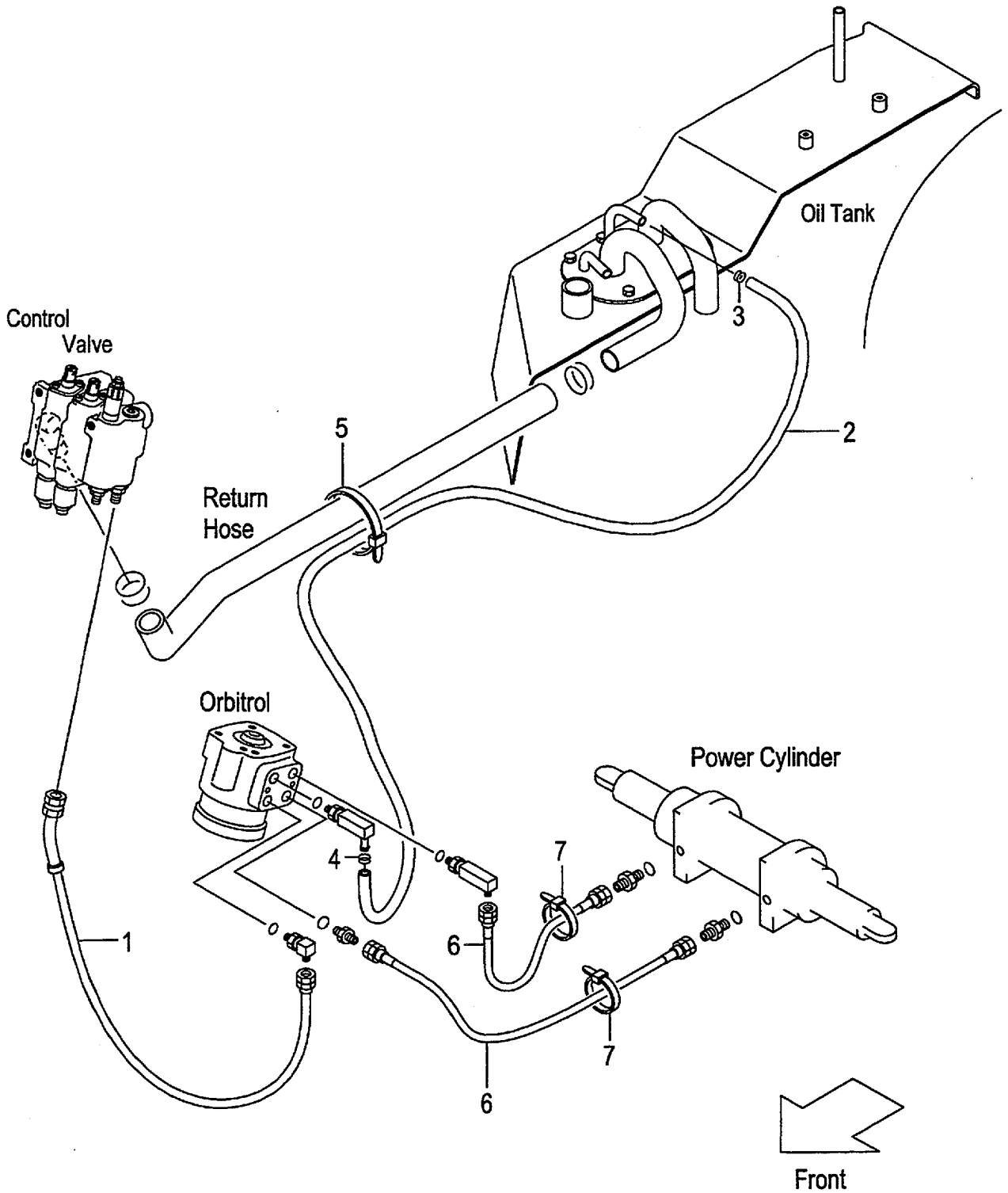

A:FG20C6H FG25C6H C:FD20C6H FD25C6H
B:FG20T6H FG25T6H D:FD20T6H FD25T6H

FIG.193
(F5H276A0)

Item No	Part No.	Mark	Description		Req'd	Remarks : Serial No.
1	215E7-62091		HOSE	ﾎｰｽ	1	[EXC][EXE][EXK][EXN][OBT] [EXB/OBT]
2	04710-04165		HOSE	ﾎｰｽ	1	[EXC][EXE][EXK][EXN][OBT] [EXB/OBT]
3	04911-00021		CLIP	ｸﾘｯﾌﾟ	1	[EXC][EXE][EXK][EXN][OBT] [EXB/OBT]
4	04911-00020		CLIP	ｸﾘｯﾌﾟ	1	[EXC][EXE][EXK][EXN][OBT] [EXB/OBT]
5	27042-42312		BAND,CABLE	ﾊﾞﾝﾄﾞ	2	[EXC][EXE][EXK][EXN][OBT] [EXB/OBT]
6	514A2-42512		HOSE,PS	ﾎｰｽ	2	[EXC][EXE][EXK][EXN][OBT] [EXB/OBT]
7	04913-11380		BAND,INSHULOCK	ﾊﾞﾝﾄﾞ	2	[EXC][EXE][EXK][EXN][OBT] [EXB/OBT]

FIG.194 HYDRAULIC LINE (MAIN)(2/3)[(EXC,EXE,EXK,EXN)/PSS]

(F5H276B0) ﾊｲﾄﾞﾛﾘｯｸﾗｲﾝ(ﾒｲﾝ)(2/3)

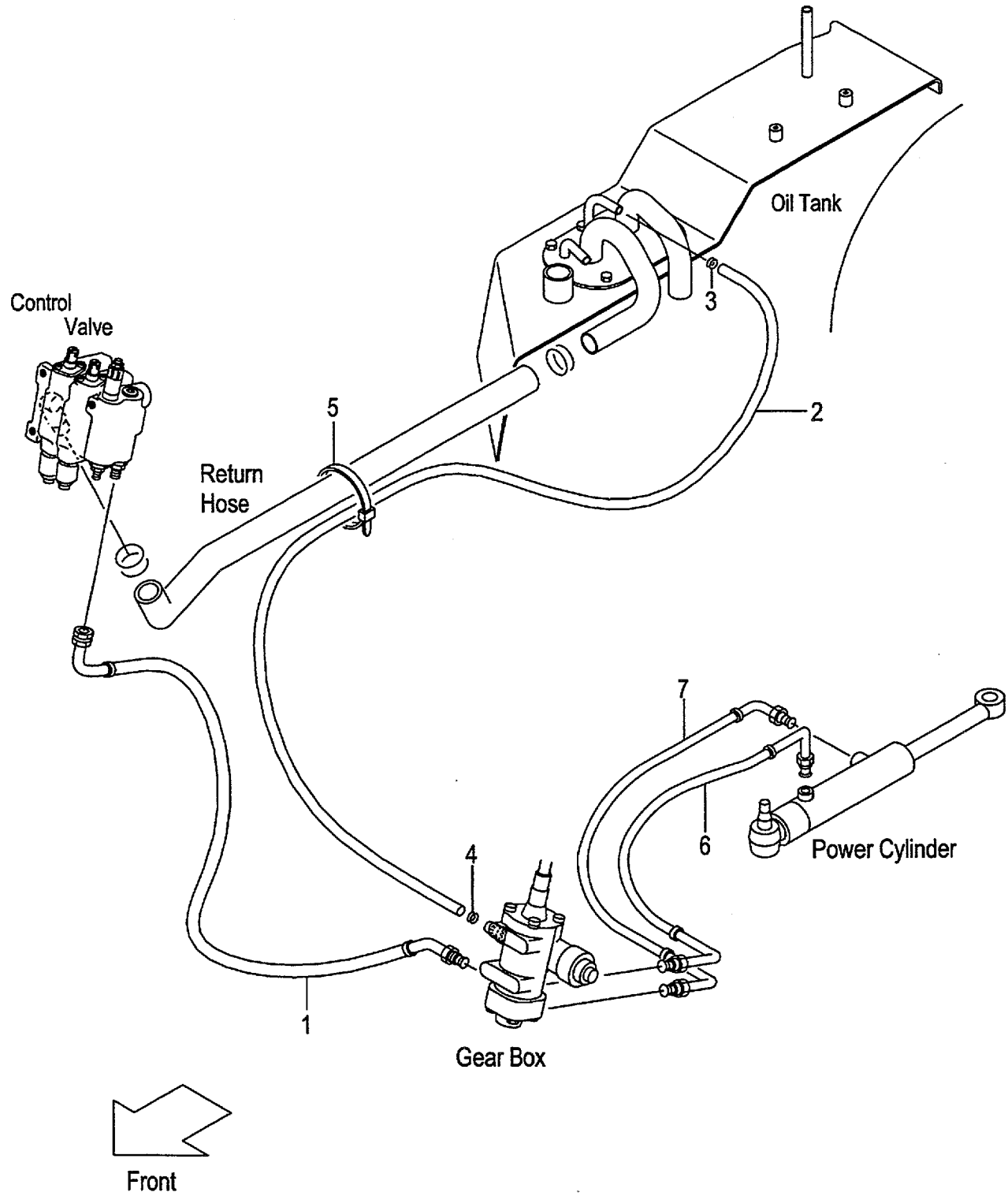

A:FG20C6H FG25C6H C:FD20C6H FD25C6H
B:FG20T6H FG25T6H D:FD20T6H FD25T6H

Item No	Part No.	Mark	Description		Req'd	Remarks : Serial No.
1	214A7-62131		HOSE	ﾎｰｽ	1	[EXC/PSS][EXE/PSS][EXK/PSS] [EXN/PSS]
2	04710-04140		HOSE	ﾎｰｽ	1	[EXC/PSS][EXE/PSS][EXK/PSS] [EXN/PSS]
3	04911-00021		CLIP	ｸﾘｯﾌﾟ	1	[EXC/PSS][EXE/PSS][EXK/PSS] [EXN/PSS]
4	04911-00020		CLIP	ｸﾘｯﾌﾟ	1	[EXC/PSS][EXE/PSS][EXK/PSS] [EXN/PSS]
5	27042-42312		BAND,CABLE	ﾊﾞﾝﾄﾞ	2	[EXC/PSS][EXE/PSS][EXK/PSS] [EXN/PSS]
6	239A7-60301		HOSE,PS,FRONT	ﾎｰｽ	1	[EXC/PSS][EXE/PSS][EXK/PSS] [EXN/PSS]
-	239H7-60401		HOSE,PS,FRONT	ﾎｰｽ	1	A,C [EXC/PSS/PC][EXE/PSS/PC] [EXK/PSS/PC][EXN/PSS/PC]
7	239A7-60311		HOSE,PS,REAR	ﾎｰｽ	1	[EXC/PSS][EXE/PSS][EXK/PSS] [EXN/PSS]

FIG.195 HYDRAULIC LINE (MAIN)(3/3)

(F5H27670) ﾊｲﾄﾞﾛﾘｯｸﾗｲﾝ(ﾒｲﾝ)(3/3)

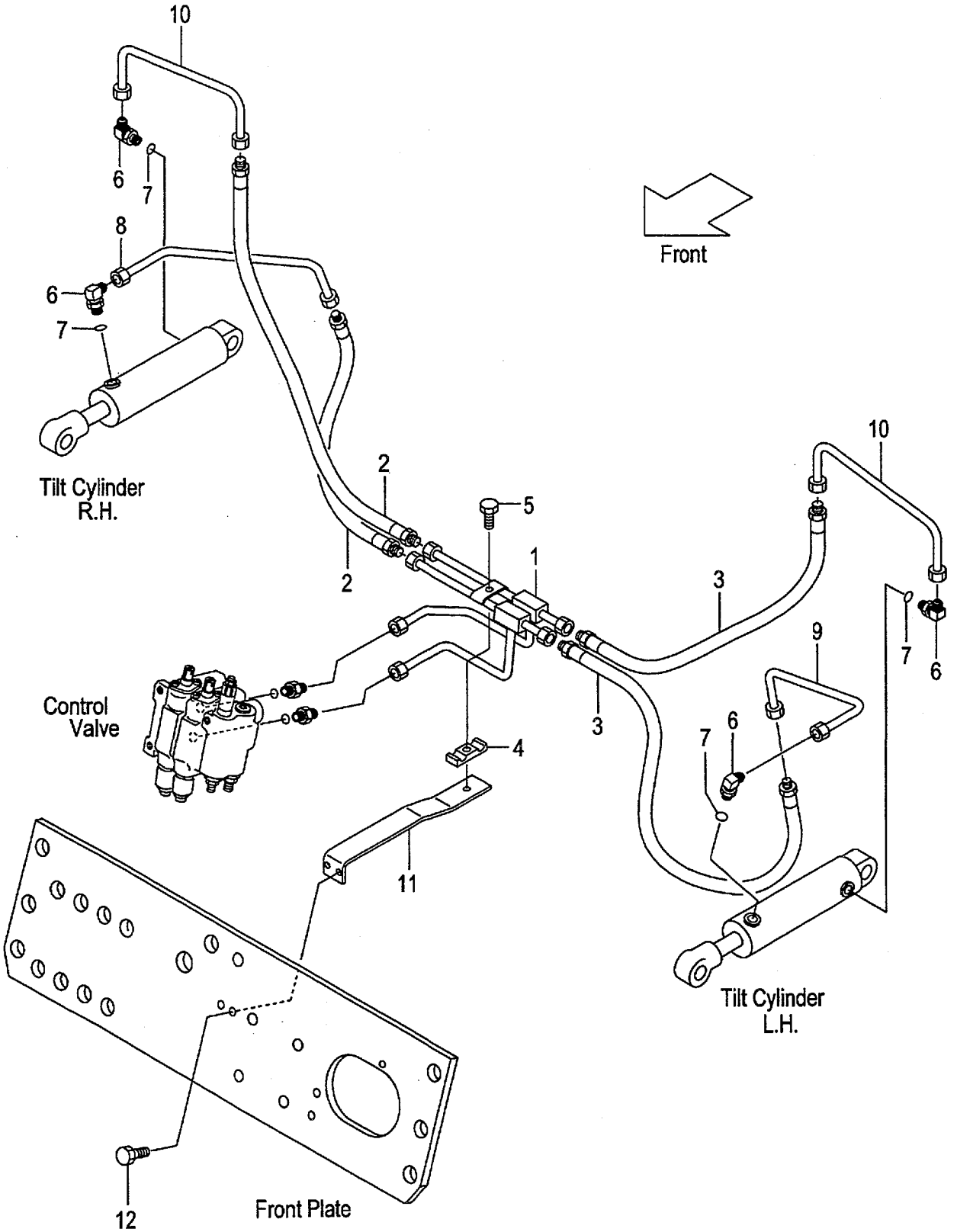

A:FG20C6H FG20T6H FG25C6H FG25T6H FG20W6H FG25W6H
B:FD20C6H FD20T6H FD25C6H FD25T6H FD20W6H FD25W6H

Item No	Part No.	Mark	Description		Req'd	Remarks : Serial No.
1	239A7-62111		PIPE,TILT	ﾊﾟｲﾌﾟ	1	
2	239A7-62251		HOSE,TILT,RH	ﾎｰｽ	2	
3	239A7-62261		HOSE,TILT,LH	ﾎｰｽ	2	
4	239A7-62351		RUBBER,TILT-PIPE	ﾗﾊﾞｰ	1	
5	01183-08025		BOLT	ﾎﾞﾙﾄ	1	
A1	277H7-60501		ELBOW-ASSY	ｴﾙﾎﾞｱｯｾﾝ	4	INC.6,7
6	NO PART NO.	#	ELBOW	ｴﾙﾎﾞ	4	
7	03320-00110		O-RING	Oﾘﾝｸﾞ	4	
8	239A7-62211		PIPE,RH,TILT-FRONT	ﾊﾟｲﾌﾟ	1	
9	239A7-62121		PIPE,LH,TILT-FRONT	ﾊﾟｲﾌﾟ	1	
10	239A7-62131		PIPE,TILT-REAR	ﾊﾟｲﾌﾟ	2	
11	239A7-62401		BRACKET,TILT-PIPE	ﾌﾞﾗｹｯﾄ	1	
12	01183-08020		BOLT	ﾎﾞﾙﾄ	2	

FIG.196 HYDRAULIC LINE (TOR-CON)(GASOLINE)

(F5H27680) ﾊｲﾄﾞﾛﾘｯｸﾗｲﾝ(ﾄﾙｺﾝ)

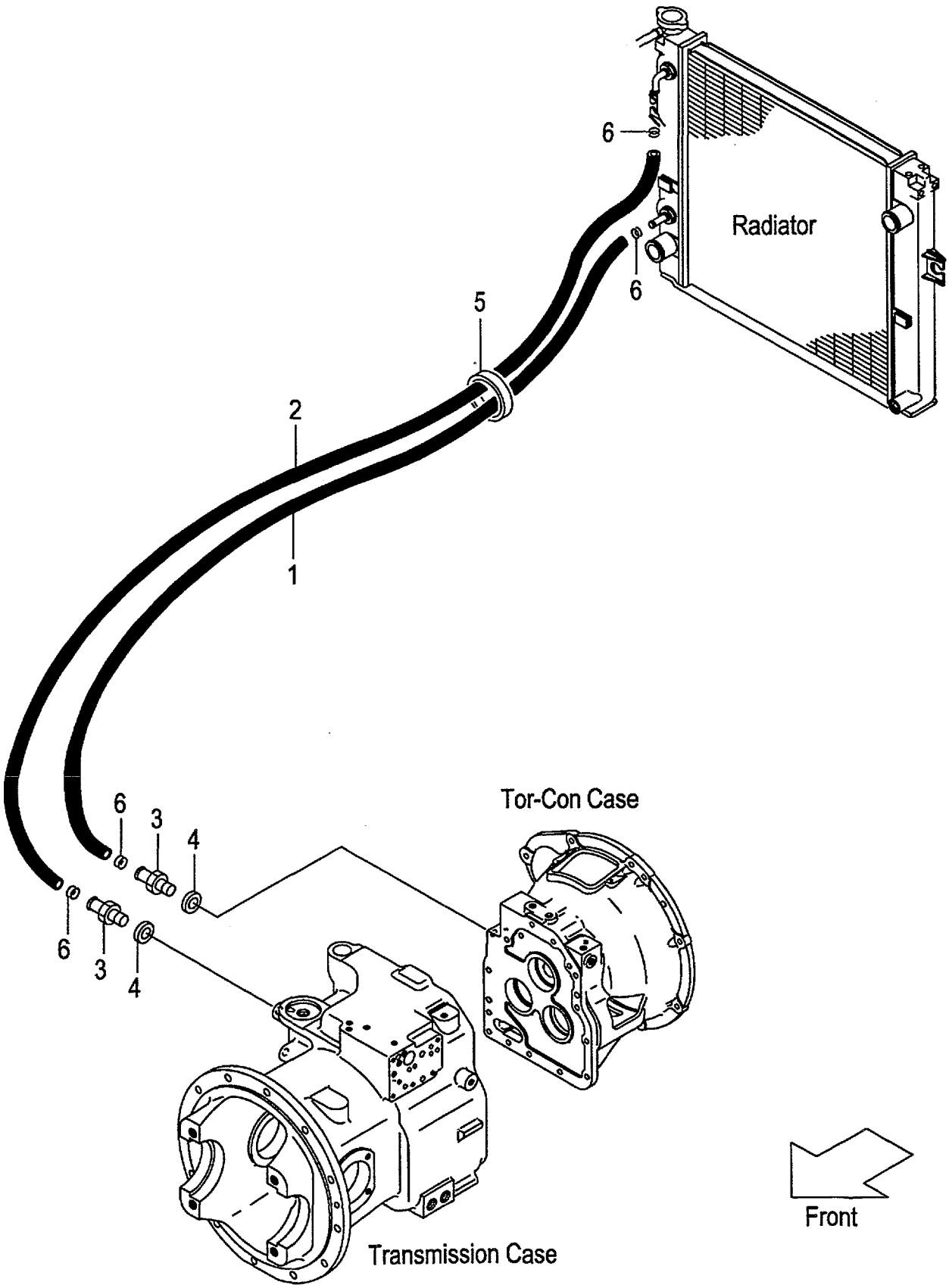

A:FG20T6H FG25T6H

Item No	Part No.	Mark	Description		Req'd	Remarks : Serial No.
1	228U7-62201		HOSE,OIL-COOLER	ﾎｰｽ	1	
2	228U7-62211		HOSE,OIL-COOLER	ﾎｰｽ	1	
3	228U7-62221		NIPPLE	ﾆｯﾌﾟﾙ	2	
4	20802-51301		PACKING	ﾊﾟｯｷﾝｸﾞ	2	
-	23467-82041		PACKING	ﾊﾟｯｷﾝｸﾞ	2	(NO CONTROL NO.)
5	04913-20380		BAND	ﾊﾞﾝﾄﾞ	1	
6	25787-82081		CLIP	ｸﾘｯﾌﾟ	4	

FIG.197 HYDRAULIC LINE (TOR-CON)(DIESEL)

(F5H27690) ﾊｲﾄﾞﾛﾘｯｸﾗｲﾝ(ﾄﾙｺﾝ)

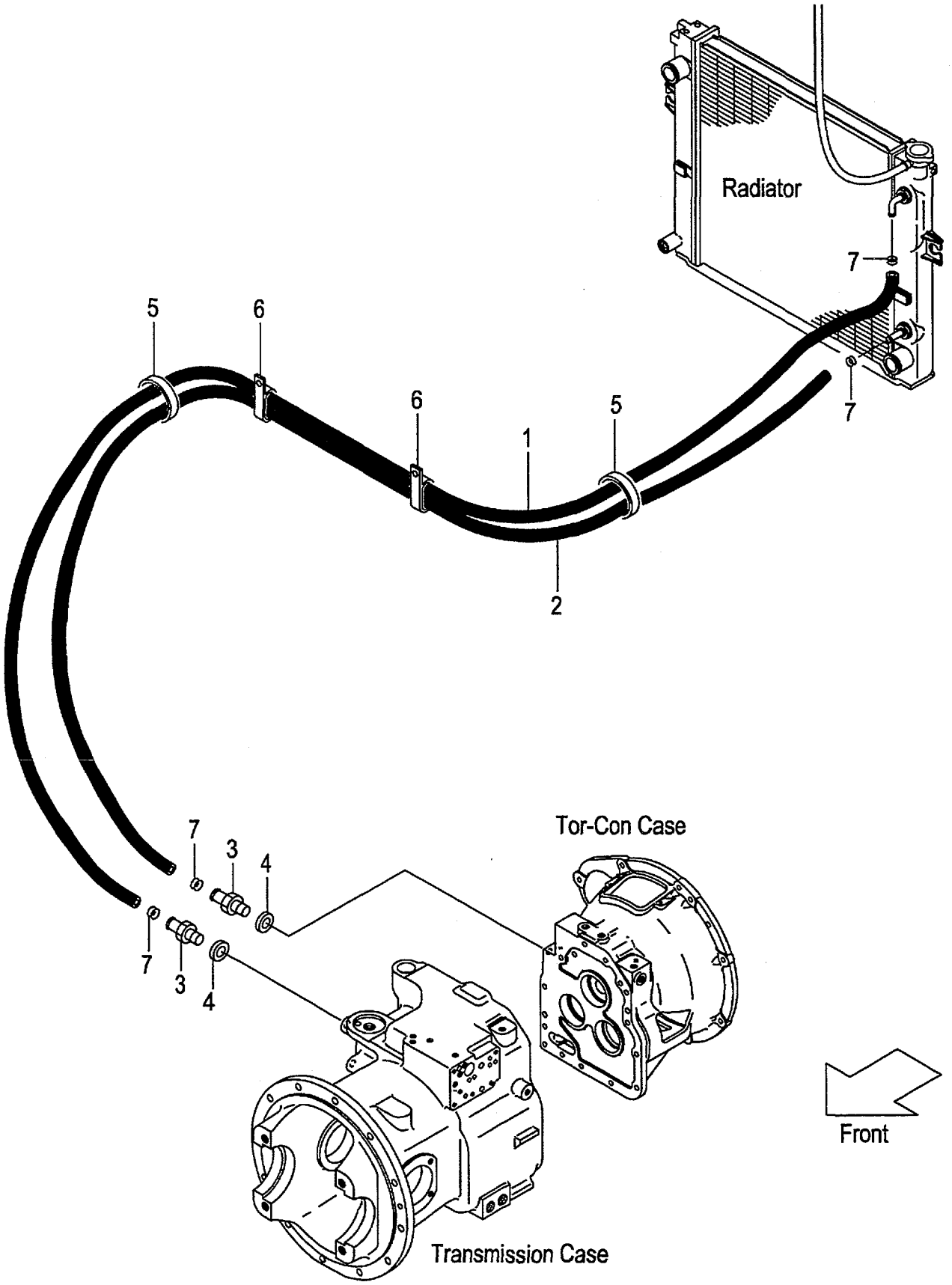

FIG.197
(F5H27690)

A:FD20T6H FD25T6H

Item No	Part No.	Mark	Description	Req'd	Remarks : Serial No.
1	234B7-82101		HOSE,OIL-COOLER ﾎｰｽ	1	
2	234B7-82111		HOSE,OIL-COOLER ﾎｰｽ	1	
3	228U7-62221		NIPPLE ﾆｯﾌﾟﾙ	2	
4	20802-51301		PACKING ﾊﾟｯｷﾝｸﾞ	2	
-	23467-82041		PACKING ﾊﾟｯｷﾝｸﾞ	2	(NO CONTROL NO.)
5	04913-20380		BAND ﾊﾞﾝﾄﾞ	2	
6	25957-62201		CLIP ｸﾘｯﾌﾟ	2	
7	25787-82081		CLIP ｸﾘｯﾌﾟ	4	

FIG.198 HYDRAULIC LINE (OIL CLUTCH)(GASOLINE)

(F5H276C0) ﾊｲﾄﾞﾛﾘｯｸﾗｲﾝ(ｵｲﾙｸﾗｯﾁ)

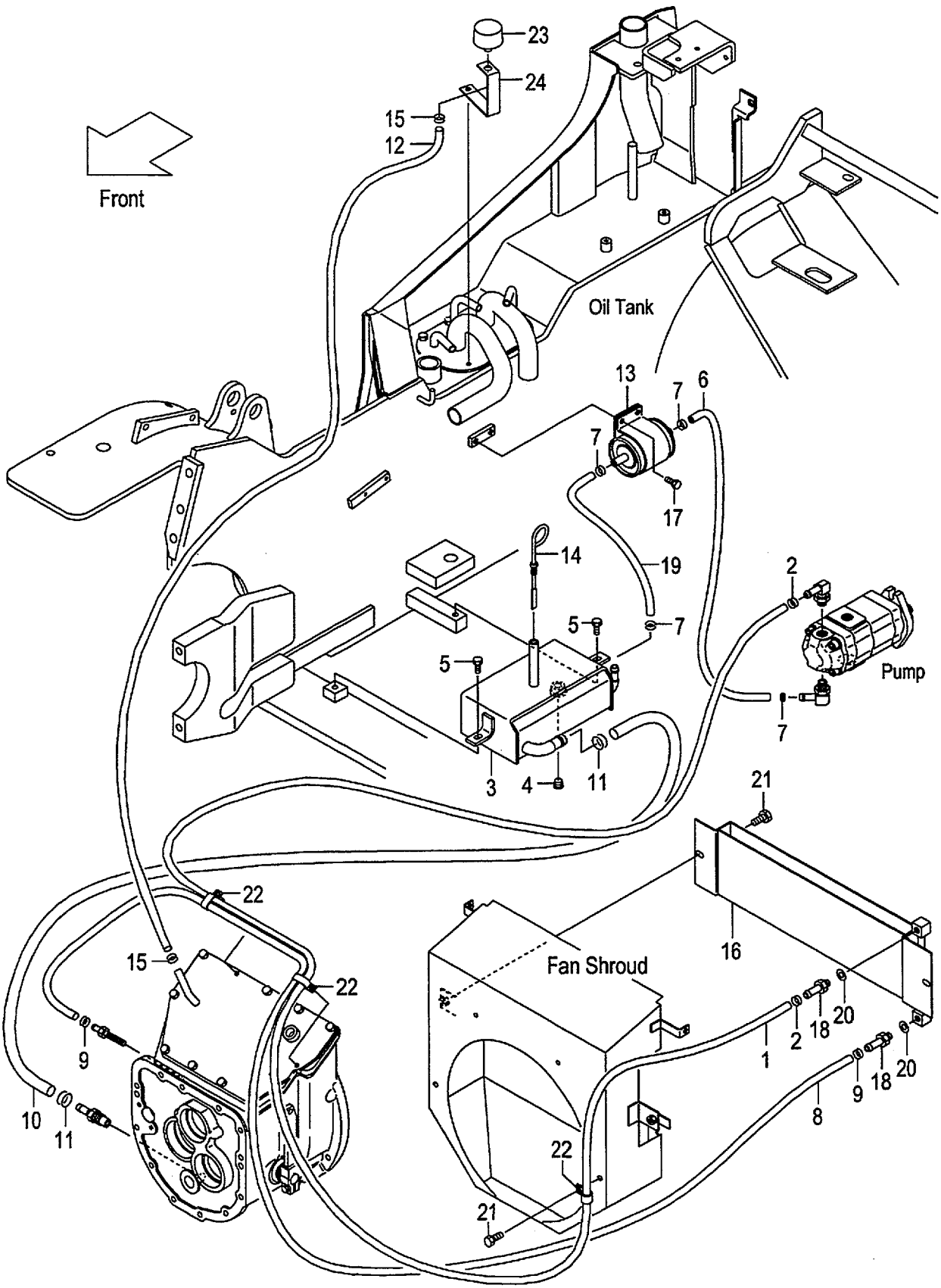

A:FG20W6H FG25W6H

Item No	Part No.	Mark	Description		Req'd	Remarks : Serial No.
1	239H7-82001		HOSE,OIL-COOLER	ﾎｰｽ	1	
2	229G7-82051		CLIP,HOSE	ｸﾘｯﾌﾟ	2	
3	234H7-60104		TANK,OIL	ﾀﾝｸ	1	
4	04000-00300		PLUG	ﾌﾟﾗｸﾞ	1	
5	01183-08020		BOLT	ﾎﾞﾙﾄ	2	
6	04710-04060		HOSE	ﾎｰｽ	1	
7	04911-00021		CLIP	ｸﾘｯﾌﾟ	4	
8	229G7-82011		HOSE,OIL-COOLER	ﾎｰｽ	1	
9	229G7-82051		CLIP,HOSE	ｸﾘｯﾌﾟ	2	
10	234H7-62291		HOSE	ﾎｰｽ	1	
11	04911-00032		CLIP	ｸﾘｯﾌﾟ	2	
12	04710-04040		HOSE	ﾎｰｽ	1	
13	234H7-62171		FILTER	ﾌｲﾙﾀ	1	
14	27717-52081		GAUGE,OIL-LEVEL	ｹﾞｰｼﾞ	1	
15	04914-00019		CLIP	ｸﾘｯﾌﾟ	2	
16	217W2-10001		COOLER,OIL	ｸｰﾗ	1	
17	01185-08016		BOLT	ﾎﾞﾙﾄ	2	
18	229G7-82101		NIPPLE	ﾆｯﾌﾟﾙ	2	
19	04710-04050		HOSE	ﾎｰｽ	1	
20	23467-82041		PACKING	ﾊﾟｯｷﾝｸﾞ	2	
21	01186-10016		BOLT	ﾎﾞﾙﾄ	3	
22	25957-62201		CLIP	ｸﾘｯﾌﾟ	3	
23	216G7-52201		CAP,BREATHER	ｷｬｯﾌﾟ	1	
24	216G7-52121		BRACKET,AIR-BREATHER	ﾌﾞﾗｹｯﾄ	1	

FIG.199 HYDRAULIC LINE (OIL CLUTCH)(DIESEL)

(F5H276D0) ﾊｲﾄﾞﾛﾘｯｸﾗｲﾝ(ｵｲﾙｸﾗｯﾁ)

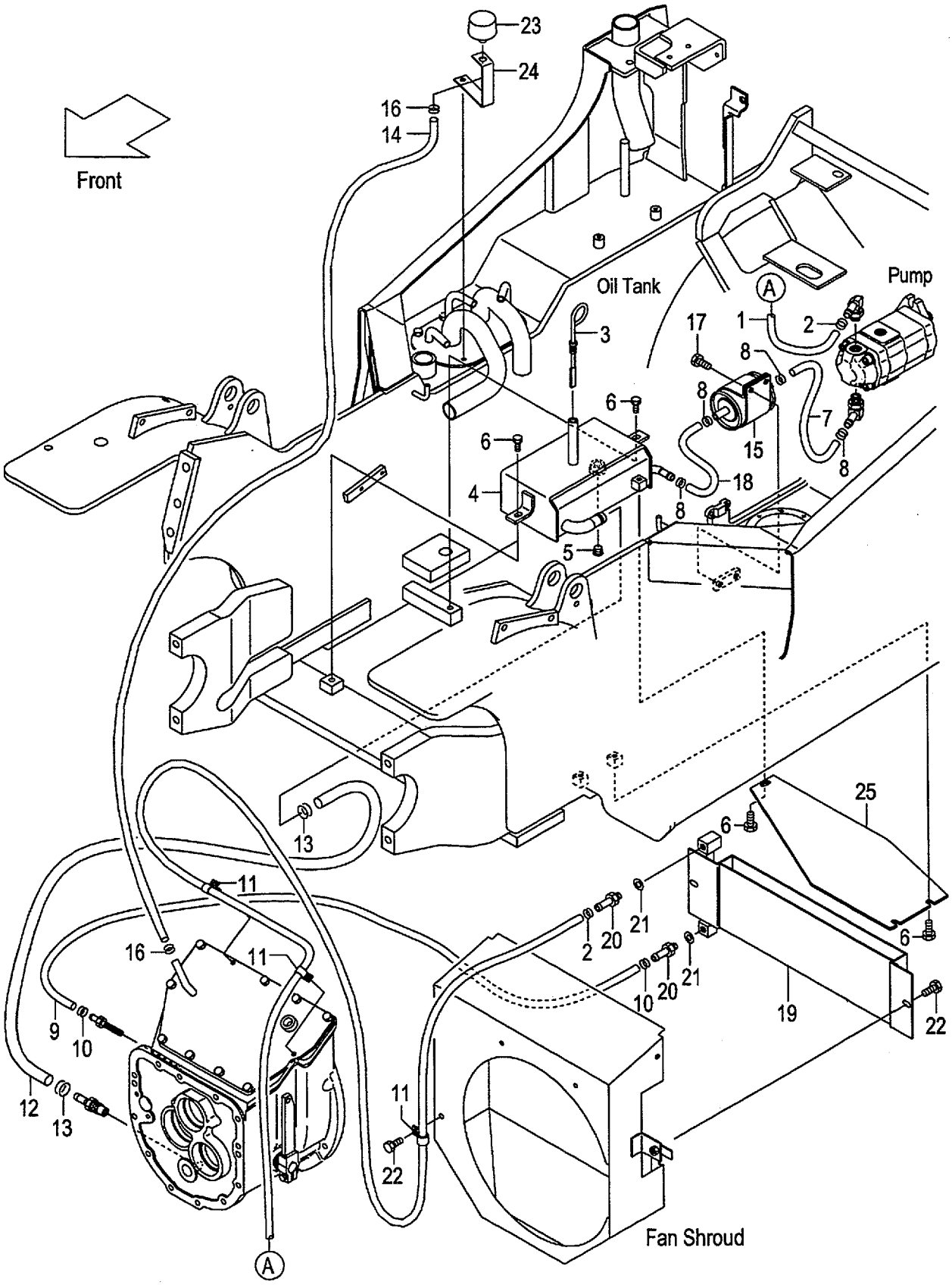

A:FD20W6H FD25W6H

Item No	Part No.	Mark	Description		Req'd	Remarks : Serial No.
1	239H7-82001		HOSE,OIL-COOLER	ホース	1	
2	229G7-82051		CLIP,HOSE	クリップ	2	
3	27717-52081		GAUGE,OIL-LEVEL	ゲージ	1	
4	239H7-60101		TANK,OIL	タンク	1	
5	04000-00300		PLUG	プラグ	1	
6	01183-08020		BOLT	ボルト	5	
7	04710-04018		HOSE	ホース	1	
8	04911-00021		CLIP	クリップ	4	
9	216H7-82001		HOSE,OIL-COOLER	ホース	1	
10	229G7-82051		CLIP,HOSE	クリップ	2	
11	25957-62201		CLIP	クリップ	5	
12	234H7-62291		HOSE	ホース	1	
13	04911-00032		CLIP	クリップ	2	
14	04710-04040		HOSE	ホース	1	
15	234H7-62171		FILTER	フイルタ	1	
16	04914-00019		CLIP	クリップ	2	
17	01185-08016		BOLT	ボルト	2	
18	04710-04092		HOSE	ホース	1	
19	217W2-10001		COOLER,OIL	クーラ	1	
20	229G7-82101		NIPPLE	ニップル	2	
21	23467-82041		PACKING	パッキング	2	
22	01186-10016		BOLT	ボルト	3	
23	216G7-52201		CAP,BREATHER	キャップ	1	
24	216G7-52121		BRACKET,AIR-BREATHER	ブラケット	1	
25	239H7-62101		GUARD,HOSE	ガード	1	

FIG.200 TILT CYLINDER

(F5H28510) ﾃｨﾙﾄｼﾘﾝﾀﾞ

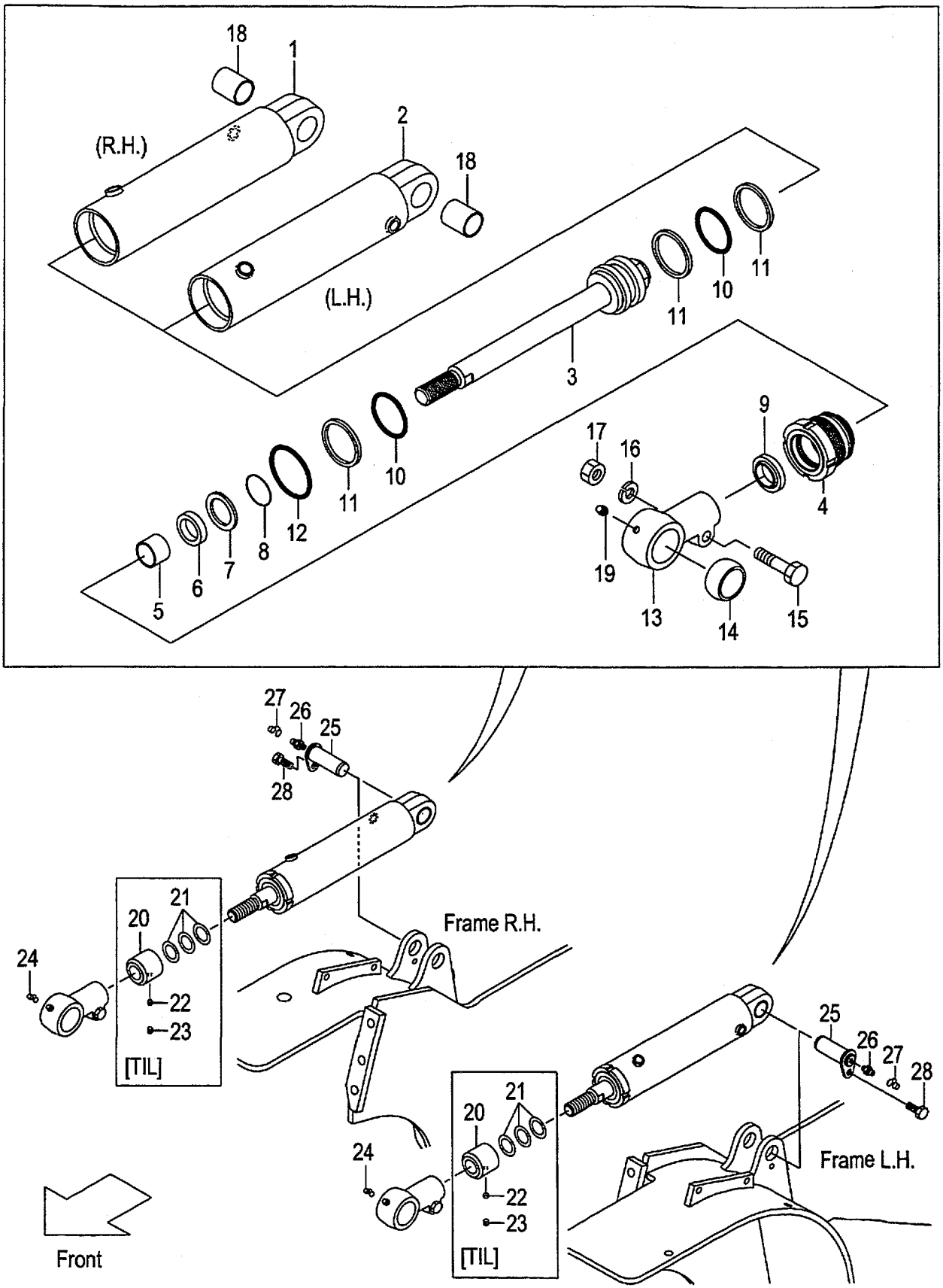

A:FG20C6H FG20T6H FG25C6H FG25T6H FG20W6H FG25W6H
B:FD20C6H FD20T6H FD25C6H FD25T6H FD20W6H FD25W6H

Item No	Part No.	Mark	Description		Req'd	Remarks : Serial No.
A1	234A8-50103		CYL-ASSY,TILT,RH	ﾃｨﾙﾄｼﾘﾝﾀﾞｱｯｾﾝ	1	INC.1,3-19
A2	234A8-50113		CYL-ASSY,TILT,LH	ﾃｨﾙﾄｼﾘﾝﾀﾞｱｯｾﾝ	1	INC.2-19
1	NO PART NO.	#*	TUBE,CYL,RH	ﾁｭｰﾌﾞ	1	
2	NO PART NO.	#*	TUBE,CYL,LH	ﾁｭｰﾌﾞ	1	
3	B-B6127-20612		ROD,PISTON	ﾛｯﾄﾞ	2	
4	NO PART NO.	#*	HEAD,CYL	ﾍｯﾄﾞ	2	
5	B-96401-30159	*	BUSHING	ﾌﾞｯｼﾝｸﾞ	2	
6	B-30961-03012	*	U-RING	Uﾘﾝｸﾞ	2	
7	B-30151-03006		SPACER	ｽﾍﾟｰｻ	2	
8	B-30141-35012		RING,SNAP	ｽﾅｯﾌﾟﾘﾝｸﾞ	2	
9	B-30191-30025	*	RING,WIPER	ﾘﾝｸﾞ	2	
10	B-95112-06000	*	O-RING	Oﾘﾝｸﾞ	4	
11	B-95713-06000	*	RING,BACK-UP	ﾘﾝｸﾞ	6	
12	B-95121-07000	*	O-RING	Oﾘﾝｸﾞ	2	
13	NO PART NO.	#*	HEAD,ROD	ﾍｯﾄﾞ	2	
14	B-30431-35009	*	BUSHING,PIN	ﾌﾞｯｼﾝｸﾞ	2	
15	B-B6341-01401		BOLT	ﾎﾞﾙﾄ	2	
16	B-30311-01403		WASHER	ﾜｯｼｬ	2	
17	B-B6351-01401		NUT	ﾅｯﾄ	2	
18	B-30421-30005	*	BUSHING,PIN	ﾌﾞｯｼﾝｸﾞ	2	
19	B-96111-10613		NIPPLE,GREASE	ﾆｯﾌﾟﾙ	2	
20	234A8-52162		SPACER,L=156	ｽﾍﾟｰｻ	2	[TIL013](3-3 DEG.)
-	215B8-52022		SPACER,L=129	ｽﾍﾟｰｻ	2	[TIL014][TIL016] (3-6,6-6 DEG.)
-	234A8-52172		SPACER,L=93	ｽﾍﾟｰｻ	2	[TIL017](6-10 DEG.)
21	23658-52101		SHIM	ｼﾑ	6	[TIL013][TIL014] (3-3,3-6 DEG.)
-	23658-52101		SHIM	ｼﾑ	6	[TIL016][TIL017] (6-6,6-10 DEG.)
22	01066-10012		SCREW,SET	ｽｸﾘｭｾｯﾄ	2	[TIL013][TIL014] (3-3,3-6 DEG.)
-	01066-10012		SCREW,SET	ｽｸﾘｭｾｯﾄ	2	[TIL016][TIL017] (6-6,6-10 DEG.)
23	23658-52401		PLUG,NYLON	ﾌﾟﾗｸﾞ	2	[TIL013][TIL014] (3-3,3-6 DEG.)
-	23658-52401		PLUG,NYLON	ﾌﾟﾗｸﾞ	2	[TIL016][TIL017] (6-6,6-10 DEG.)
24	22199-12401		CAP,NIPPLE	ｷｬｯﾌﾟ	2	
25	216G8-52201		PIN	ﾋﾟﾝ	2	
26	04901-00100		FITTING	ﾌｨｯﾃｨﾝｸﾞ	2	
27	22199-12401		CAP,NIPPLE	ｷｬｯﾌﾟ	2	
28	216G8-52301		BOLT & WASHER	ﾎﾞﾙﾄ&ﾜｯｼｬ	2	
K1	B-3070A-00103		KIT,REPAIR	ﾘﾍﾟｱｷｯﾄ	2	INC.6,9-12
K2	B-B670B-00086		KIT,CYL-TUBE,RH	ｼﾘﾝﾀﾞﾁｭｰﾌﾞｷｯﾄ	1	INC.1,18
K3	B-B670B-00087		KIT,CYL-TUBE,LH	ｼﾘﾝﾀﾞﾁｭｰﾌﾞｷｯﾄ	1	INC.2,18
K4	B-3065B-00211		KIT,ROD-HEAD	ﾛｯﾄﾞﾍｯﾄﾞｷｯﾄ	2	INC.13,14
K5	B-3070B-00217		KIT,CYL-HEAD	ｼﾘﾝﾀﾞﾍｯﾄﾞｷｯﾄ	2	INC.4,5

FIG.201 TILT BOOT [TLB][FC]

(F5H28520) ﾃｨﾙﾄﾌﾞｰﾂ

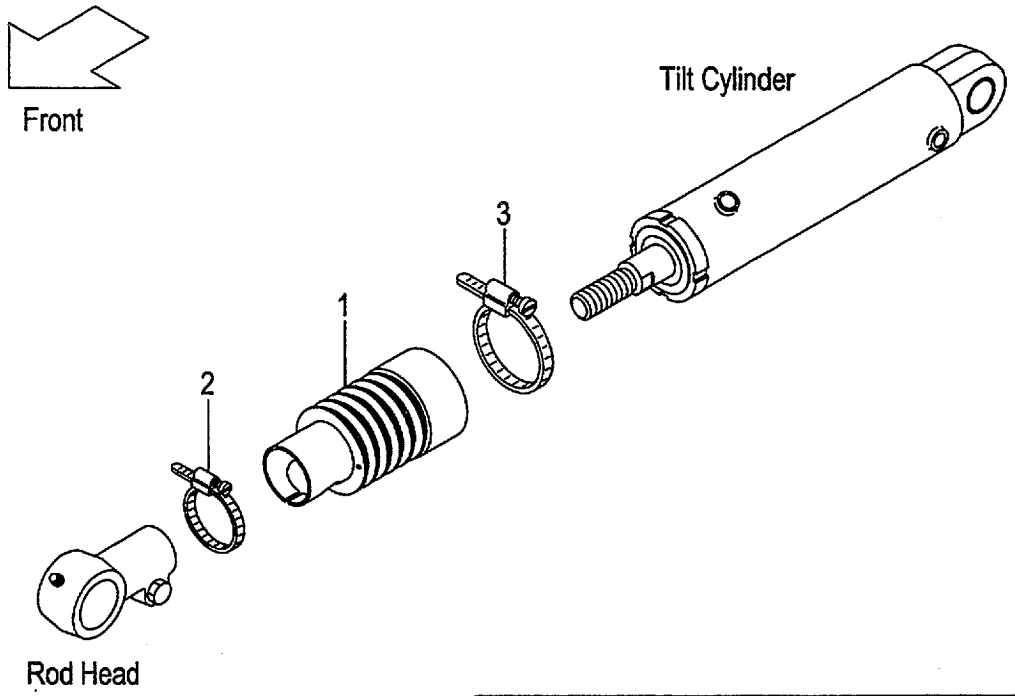

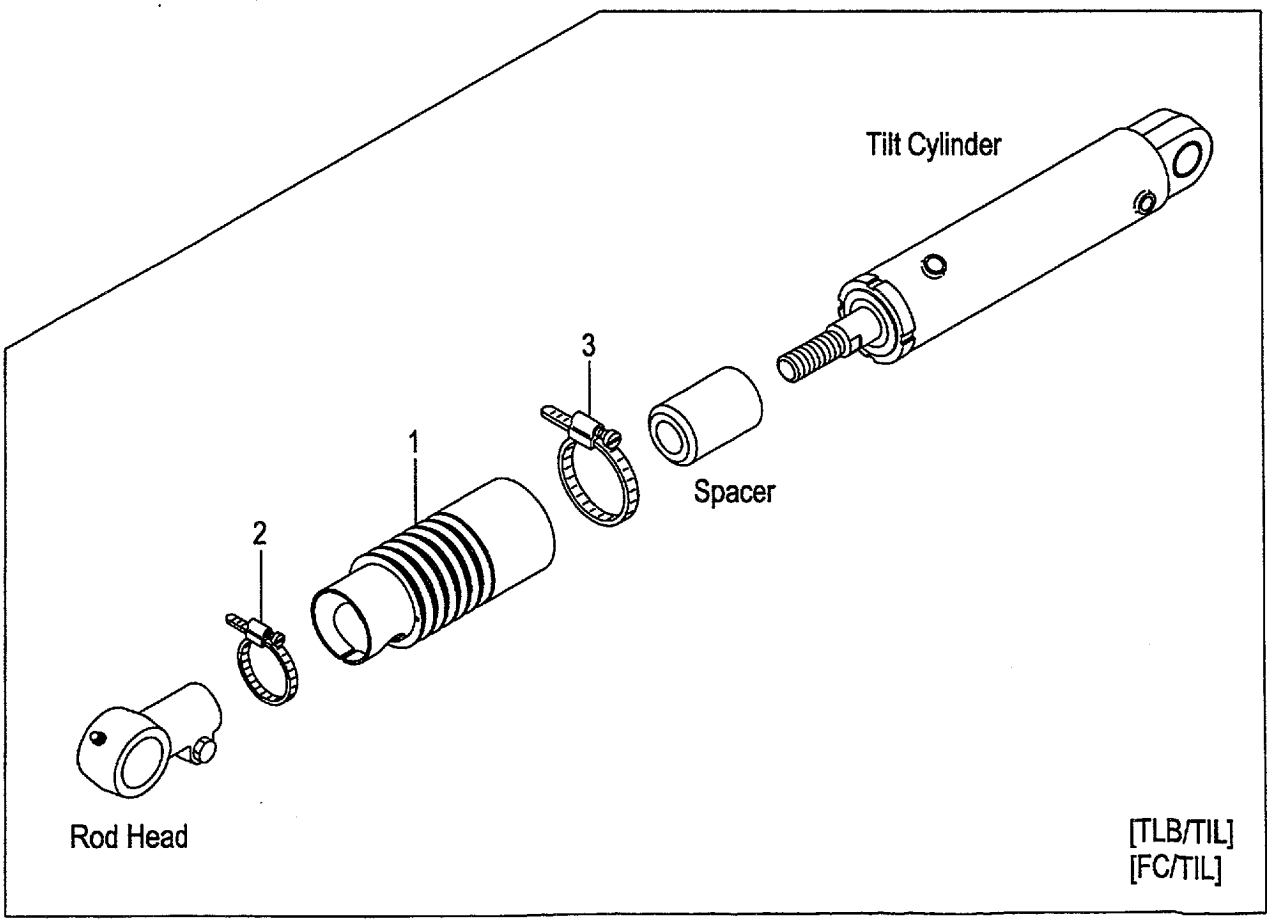

A:FG20C6H FG20T6H FG25C6H FG25T6H FG20W6H FG25W6H
B:FD20C6H FD20T6H FD25C6H FD25T6H FD20W6H FD25W6H

Item No	Part No.	Mark	Description		Req'd	Remarks : Serial No.
A1	231A8-51001		BOOT-ASSY,TILT-CYL	ﾌﾞｰﾂｱｯｾﾝ	2	[TLB][FC](6-12 DEG.) INC.1-3
-	231A8-51011		BOOT-ASSY,TILT-CYL	ﾌﾞｰﾂｱｯｾﾝ	2	[TLB/TIL013&014](3-3,3-6 DEG.) INC.1-3
-	231A8-51011		BOOT-ASSY,TILT-CYL	ﾌﾞｰﾂｱｯｾﾝ	2	[TLB/TIL016&017](6-6,6-10 DEG.) INC.1-3
-	231A8-51011		BOOT-ASSY,TILT-CYL	ﾌﾞｰﾂｱｯｾﾝ	2	[FC/TIL013&014](3-3,3-6 DEG.) INC.1-3
-	231A8-51011		BOOT-ASSY,TILT-CYL	ﾌﾞｰﾂｱｯｾﾝ	2	[FC/TIL016&017](6-6,6-10 DEG.) INC.1-3
1	23678-53001		BOOT,TILT-CYL	ﾌﾞｰﾂ	2	[TLB][FC](6-12 DEG.)
-	23678-53101		BOOT,TILT-CYL	ﾌﾞｰﾂ	2	[TLB/TIL013&014] [FC/TIL013&014](3-3,3-6 DEG.)
-	23678-53101		BOOT,TILT-CYL	ﾌﾞｰﾂ	2	[TLB/TIL016&017] [FC/TIL016&017](6-6,6-10 DEG.)
2	216G8-53001		BAND,50	ﾊﾞﾝﾄﾞ	2	[TLB][FC]
-	216G8-53011		BAND,55	ﾊﾞﾝﾄﾞ	(2)	[TLB][FC]
3	216G8-53051		BAND,90	ﾊﾞﾝﾄﾞ	2	[TLB][FC]
-	224T8-53011		BAND,95	ﾊﾞﾝﾄﾞ	(2)	[TLB][FC]

FIG.202 DECAL (1/2)

(F5H29110) ﾃﾞｶﾙ(1/2)

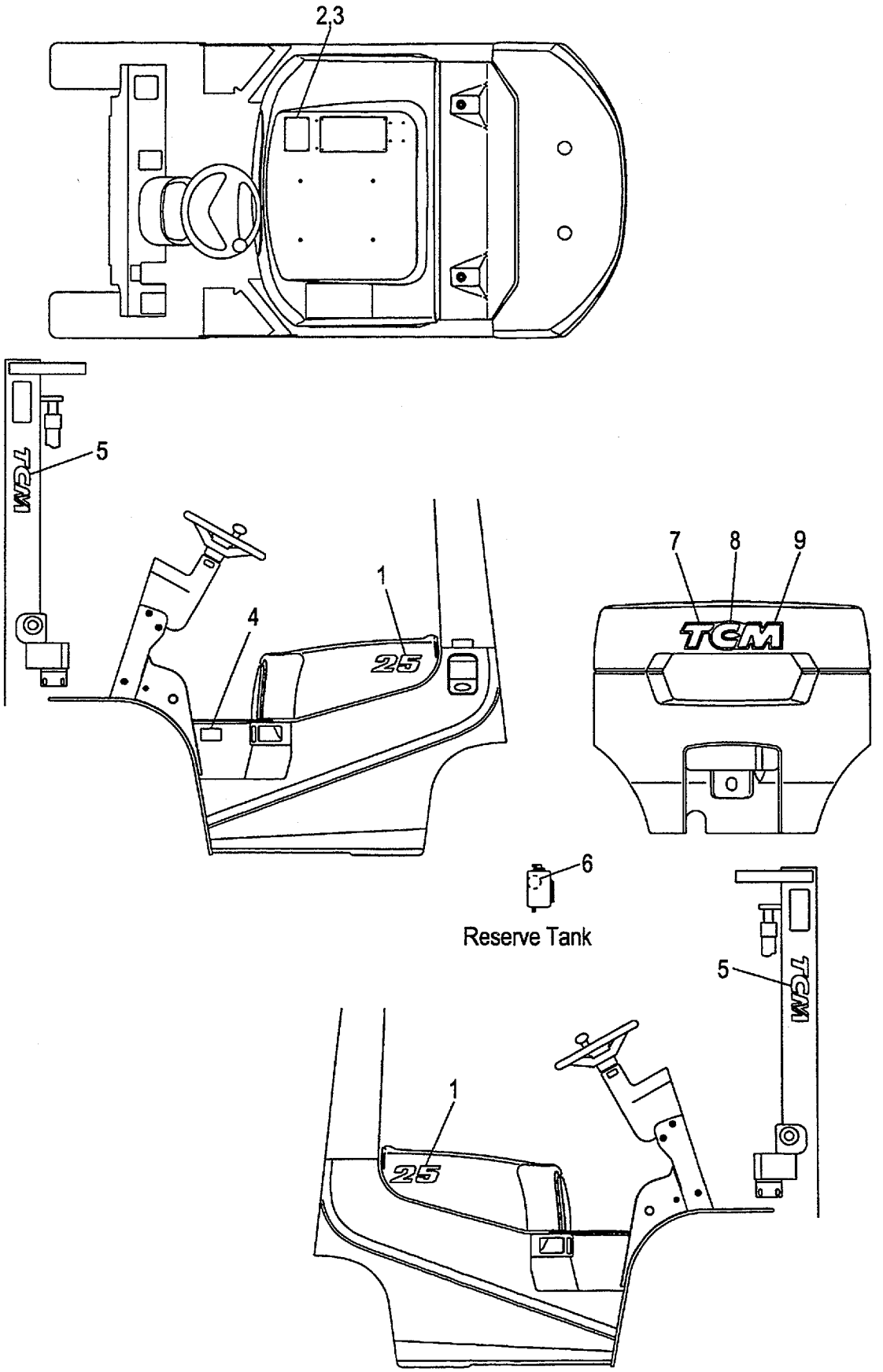

A:FG20C6H FG20T6H D:FG25W6H G:FD20W6H
B:FG25C6H FG25T6H E:FD20C6H FD20T6H H:FD25W6H
C:FG20W6H F:FD25C6H FD25T6H

FIG.202
(F5H29110)

Item No	Part No.	Mark	Description	Req'd	Remarks : Serial No.
1	239A9-12001		DECAL,MODEL-MARK,20 ﾃﾞｶﾙ	2	A,C,E,G
-	239C9-12001		DECAL,MODEL-MARK,25 ﾃﾞｶﾙ	2	B,D,F,H
-	239A9-12011		DECAL,MODEL-MARK,20 ﾃﾞｶﾙ	2	A,C,E,G [PCL]
-	239C9-12011		DECAL,MODEL-MARK,25 ﾃﾞｶﾙ	2	B,D,F,H [PCL]
2	27419-12051		CHART,CAPACITY,2.0T ﾁｬｰﾄ	1	A,C,E,G (VM200-500)
-	27419-12101		CHART,CAPACITY,2.0T ﾁｬｰﾄ	1	B,D,F,H (VM550-600)
-	27539-12011		CHART,CAPACITY,2.5T ﾁｬｰﾄ	1	A,C,E,G (VM200-500)
-	27539-12021		CHART,CAPACITY,2.5T ﾁｬｰﾄ	1	B,D,F,H (VM550-600)
-	514A3-82331		CHART,CAPACITY ﾁｬｰﾄ	1	A,B,E,F [EXB/SPANISH][EXE/SPANISH]
-	514A3-82341		CHART,CAPACITY ﾁｬｰﾄ	1	A,B,E,F [EXB/FRENCH][EXE/FRENCH]
-	522A2-82061		CHART,CAPACITY,2.0T ﾁｬｰﾄ	1	A,E [VM200-500/EXB/CHINESE]
-	522A2-82111		CHART,CAPACITY,2.0T ﾁｬｰﾄ	1	A,E [VM550-600/EXB/CHINESE]
-	522E2-82061		CHART,CAPACITY,2.5T ﾁｬｰﾄ	1	B,F [VM200-500/EXB/CHINESE]
-	522E2-82111		CHART,CAPACITY,2.5T ﾁｬｰﾄ	1	B,F [VM550-600/EXB/CHINESE]
-	225R9-12011		CHART,CAPACITY,2.0T ﾁｬｰﾄ	1	A,E [VM200-500/EXB/RUSSIAN]
-	225R9-12021		CHART,CAPACITY,2.0T ﾁｬｰﾄ	1	A,E [VM550-600/EXB/RUSSIAN]
-	225S9-12001		CHART,CAPACITY,2.5T ﾁｬｰﾄ	1	B,F [VM200-500/EXB/RUSSIAN]
-	225S9-12011		CHART,CAPACITY,2.5T ﾁｬｰﾄ	1	B,F [VM550-600/EXB/RUSSIAN]
-	514A2-92011		CHART,CAPACITY,2.0T ﾁｬｰﾄ	1	A,E [EXC]
-	514E2-92001		CHART,CAPACITY,2.5T ﾁｬｰﾄ	1	B,F [EXC]
-	514A3-82301		CHART,CAPACITY ﾁｬｰﾄ	1	A,B,E,F [EXE/ENGLISH][EXN/ENGLISH]
-	514A3-82321		CHART,CAPACITY ﾁｬｰﾄ	1	A,B,E,F [EXE/GERMAN]
-	514A3-82351		CHART,CAPACITY ﾁｬｰﾄ	1	A,B,E,F [EXE/DUTCH]
-	514A3-82361		CHART,CAPACITY ﾁｬｰﾄ	1	A,B,E,F [EXE/DANISH][EXN/DANISH]
-	514A3-82371		CHART,CAPACITY ﾁｬｰﾄ	1	A,B,E,F [EXE/ITALIAN]
-	514A3-82381		CHART,CAPACITY ﾁｬｰﾄ	1	A,B,E,F [EXE/GREEK]

FIG.202 DECAL (1/2)

(F5H29110) ﾃﾞｶﾙ(1/2)

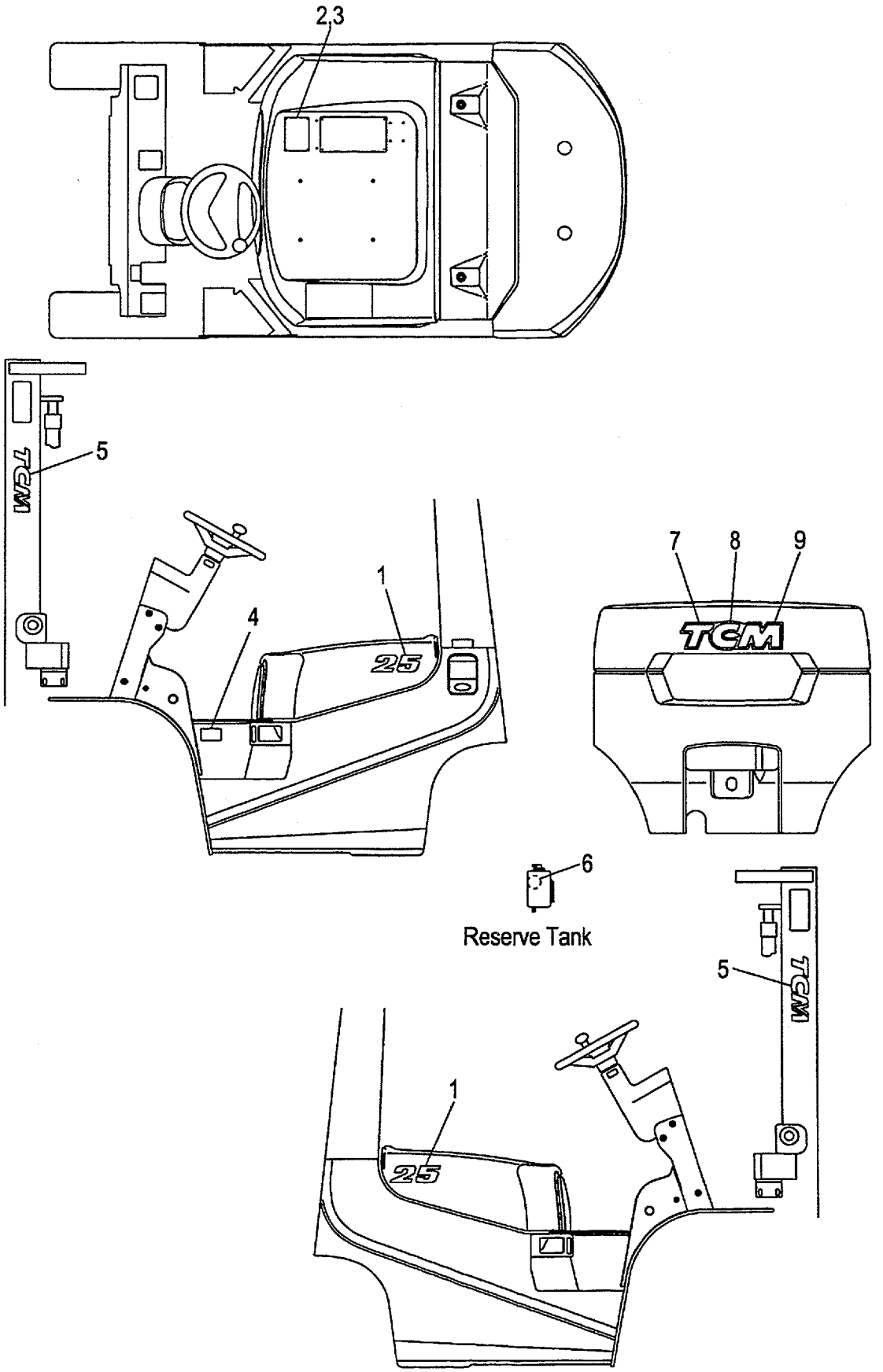

A:FG20C6H FG20T6H D:FG25W6H G:FD20W6H
B:FG25C6H FG25T6H E:FD20C6H FD20T6H H:FD25W6H
C:FG20W6H F:FD25C6H FD25T6H

FIG.202
(F5H29110)

Item No	Part No.	Mark	Description		Req'd	Remarks : Serial No.
-	514A3-82391		CHART,CAPACITY	ﾁｬｰﾄ	1	A,B,E,F [EXE/PORTUGUESE]
-	529F3-82111		CHART,CAPACITY	ﾁｬｰﾄ	1	A,B,E,F [EXN/SWEDISH]
-	529F3-82101		CHART,CAPACITY	ﾁｬｰﾄ	1	A,B,E,F [EXN/FINISH]
3	02432-01008		RIVET	ﾘﾍﾞｯﾄ	4	
4	27049-12172	*	DECAL,AIR-PRESSURE	ﾃﾞｶﾙ	1	
-	225R9-12142		DECAL,AIR-PRESSURE	ﾃﾞｶﾙ	1	A,B,E,F [EXB/RUSSIAN]
5	273A9-12242	*	DECAL,TCM	ﾃﾞｶﾙ	2	
6	23659-12101	*	DECAL,L/LIFE-COOLANT	ﾃﾞｶﾙ	1	
-	522A3-82641		DECAL,L/LIFE-COOLANT	ﾃﾞｶﾙ	1	A,B,E,F [EXB/SPANISH][EXE/SPANISH]
-	522A3-82841		DECAL,L/LIFE-COOLANT	ﾃﾞｶﾙ	1	A,B,E,F [EXB/FRENCH][EXE/FRENCH]
-	232W9-12051		DECAL,L/LIFE-COOLANT	ﾃﾞｶﾙ	1	A,B,E,F [EXB/RUSSIAN]
-	522A3-82441		DECAL,L/LIFE-COOLANT	ﾃﾞｶﾙ	1	A,B,E,F [EXE/GERMAN]
-	522A3-83041		DECAL,L/LIFE-COOLANT	ﾃﾞｶﾙ	1	A,B,E,F [EXE/DUTCH]
-	522A3-83241		DECAL,L/LIFE-COOLANT	ﾃﾞｶﾙ	1	A,B,E,F [EXE/DANISH][EXN/DANISH]
-	522A3-83441		DECAL,L/LIFE-COOLANT	ﾃﾞｶﾙ	1	A,B,E,F [EXE/ITALIAN]
-	522A3-83641		DECAL,L/LIFE-COOLANT	ﾃﾞｶﾙ	1	A,B,E,F [EXE/GREEK]
-	522A3-83841		DECAL,L/LIFE-COOLANT	ﾃﾞｶﾙ	1	A,B,E,F [EXE/PORTUGUESE]
-	529F3-82091		DECAL,L/LIFE-COOLANT	ﾃﾞｶﾙ	1	A,B,E,F [EXN/SWEDISH]
-	529F3-82081		DECAL,L/LIFE-COOLANT	ﾃﾞｶﾙ	1	A,B,E,F [EXN/FINISH]
7	216G9-12013		DECAL,B/WEIGHT,T	ﾃﾞｶﾙ	1	
8	216G9-12023		DECAL,B/WEIGHT,C	ﾃﾞｶﾙ	1	
9	216G9-12033		DECAL,B/WEIGHT,M	ﾃﾞｶﾙ	1	
K1	236A9-19801		KIT,DECAL	ﾃﾞｶﾙｷｯﾄ	1	INC.4-6 & FIG.203:3-9,12,13
-	236A9-19811		KIT,DECAL	ﾃﾞｶﾙｷｯﾄ	1	A,B,E,F [EXB/ENGLISH] INC.4-6 & FIG.204:3-9,16,17
-	236A9-19811		KIT,DECAL	ﾃﾞｶﾙｷｯﾄ	1	A,B,E,F [EXC] INC.4-6 & FIG.205:3-9,12,13
-	236A9-19811		KIT,DECAL	ﾃﾞｶﾙｷｯﾄ	1	A,B,E,F [EXE/ENGLISH] INC.4-6 & FIG.206:3-9,13,14
-	236A9-19811		KIT,DECAL	ﾃﾞｶﾙｷｯﾄ	1	A,B,E,F [EXK] INC.4-6 & FIG.207:3-9,12,13

FIG.202 DECAL (1/2)

(F5H29110) ﾃﾞｶﾙ(1/2)

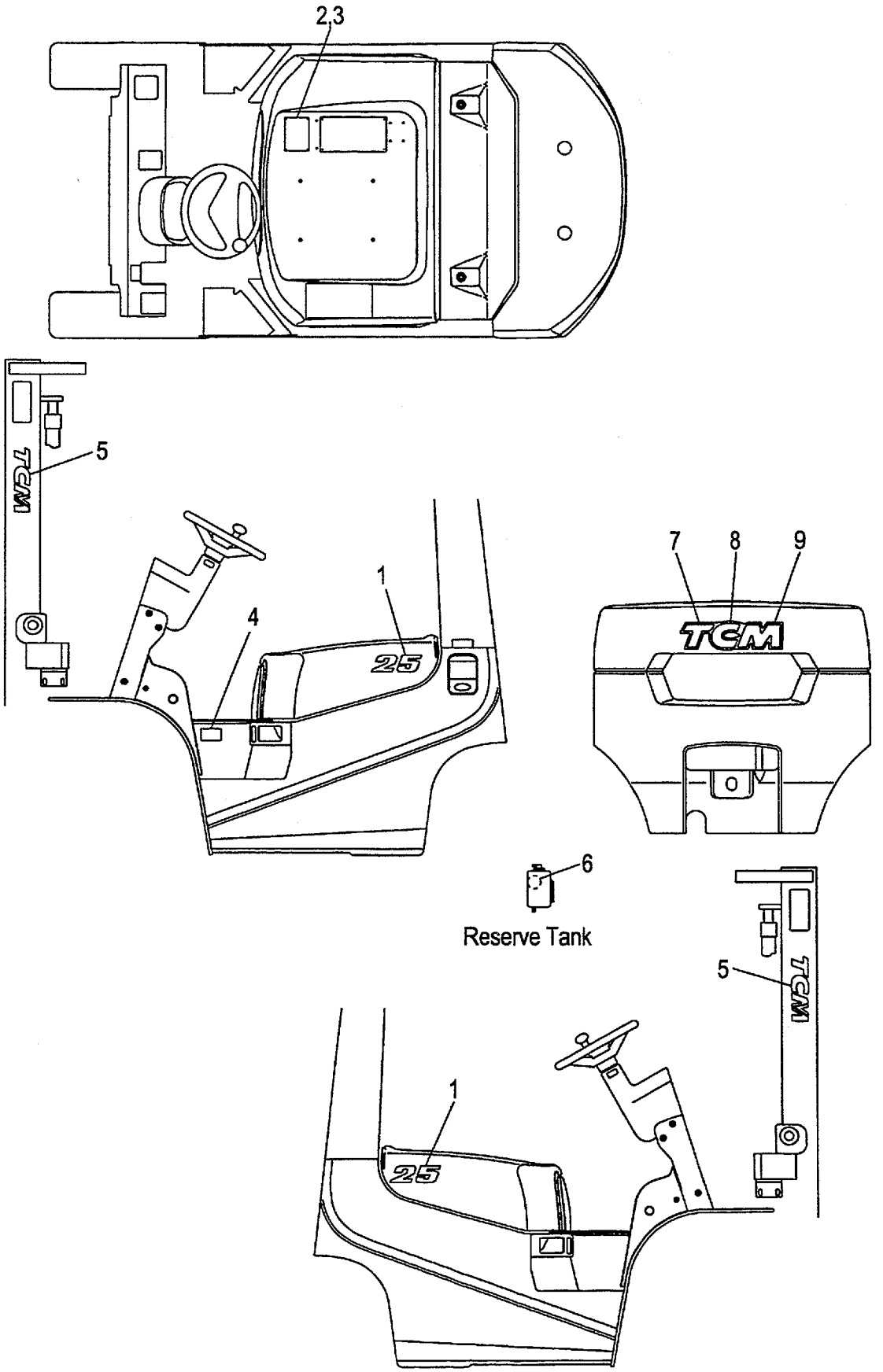

A:FG20C6H FG20T6H D:FG25W6H G:FD20W6H
B:FG25C6H FG25T6H E:FD20C6H FD20T6H H:FD25W6H
C:FG20W6H F:FD25C6H FD25T6H

FIG.202
(F5H29110)

Item No	Part No.	Mark	Description	Req'd	Remarks : Serial No.
-	236A9-19811		KIT,DECAL デカルキット	1	A,B,E,F [EXN/ENGLISH] INC.4-6 & FIG.208:3-9,13,14

FIG.203 DECAL (2/2)

(F5H29120) ﾃﾞｶﾙ(2/2)

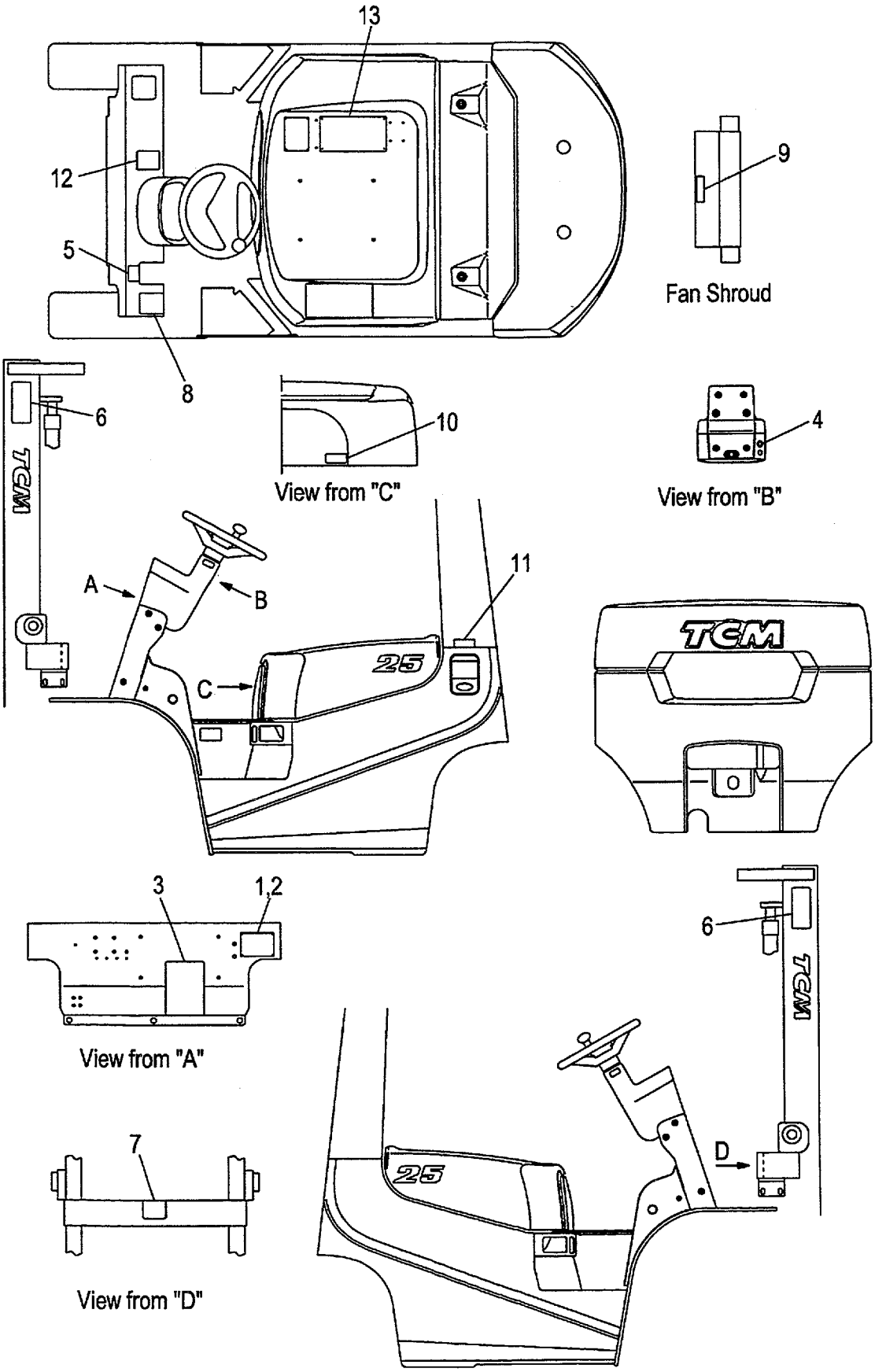

A:FG20C6H FG20T6H FG25C6H FG25T6H FG20W6H FG25W6H
B:FD20C6H FD20T6H FD25C6H FD25T6H FD20W6H FD25W6H

Item No	Part No.	Mark	Description		Req'd	Remarks : Serial No.
1	NO PART NO.	#	PLATE,NAME	ﾌﾟﾚｰﾄ	1	
2	216G9-12131		RIVET	ﾘﾍﾞｯﾄ	4	
3	25789-12051	*	DECAL,LUBRICATION	ﾃﾞｶﾙ	1	
4	216G9-12071	*	DECAL,STARTER-SWITCH	ﾃﾞｶﾙ	1	
5	214A5-53012	*	DECAL,BRAKE-LEVER	ﾃﾞｶﾙ	1	
6	27419-12062	*	DECAL,MAST-CAUTION	ﾃﾞｶﾙ	2	
7	27419-12072	*	DECAL,CROSS-BEAM	ﾃﾞｶﾙ	1	
8	216G9-12062	*	DECAL,TIRE-CAUTION	ﾃﾞｶﾙ	1	
9	216G9-12052	*	DECAL,FAN-CAUTION	ﾃﾞｶﾙ	1	
10	239A9-12071		DECAL,FUEL-CAPACITY	ﾃﾞｶﾙ	1	
11	21239-12501		DECAL,GASOLINE	ﾃﾞｶﾙ	1	A
-	21159-12501		DECAL,LIGHT-OIL	ﾃﾞｶﾙ	1	B
12	271A9-12251	*	DECAL,CAUTION	ﾃﾞｶﾙ	1	
13	23659-12054		DECAL,WARNING-PLATE	ﾃﾞｶﾙ	1	(OLD PART)
-	239A9-12301	*	DECAL,WARNING-PLATE	ﾃﾞｶﾙ	1	(NEW PART)
K1	236A9-19801		KIT,DECAL	ﾃﾞｶﾙｷｯﾄ	1	INC.3-9,12,13 & FIG.202:4-6

FIG.204 DECAL (2/2)[EXB]

(F5H291B0) ﾃﾞｶﾙ(2/2)

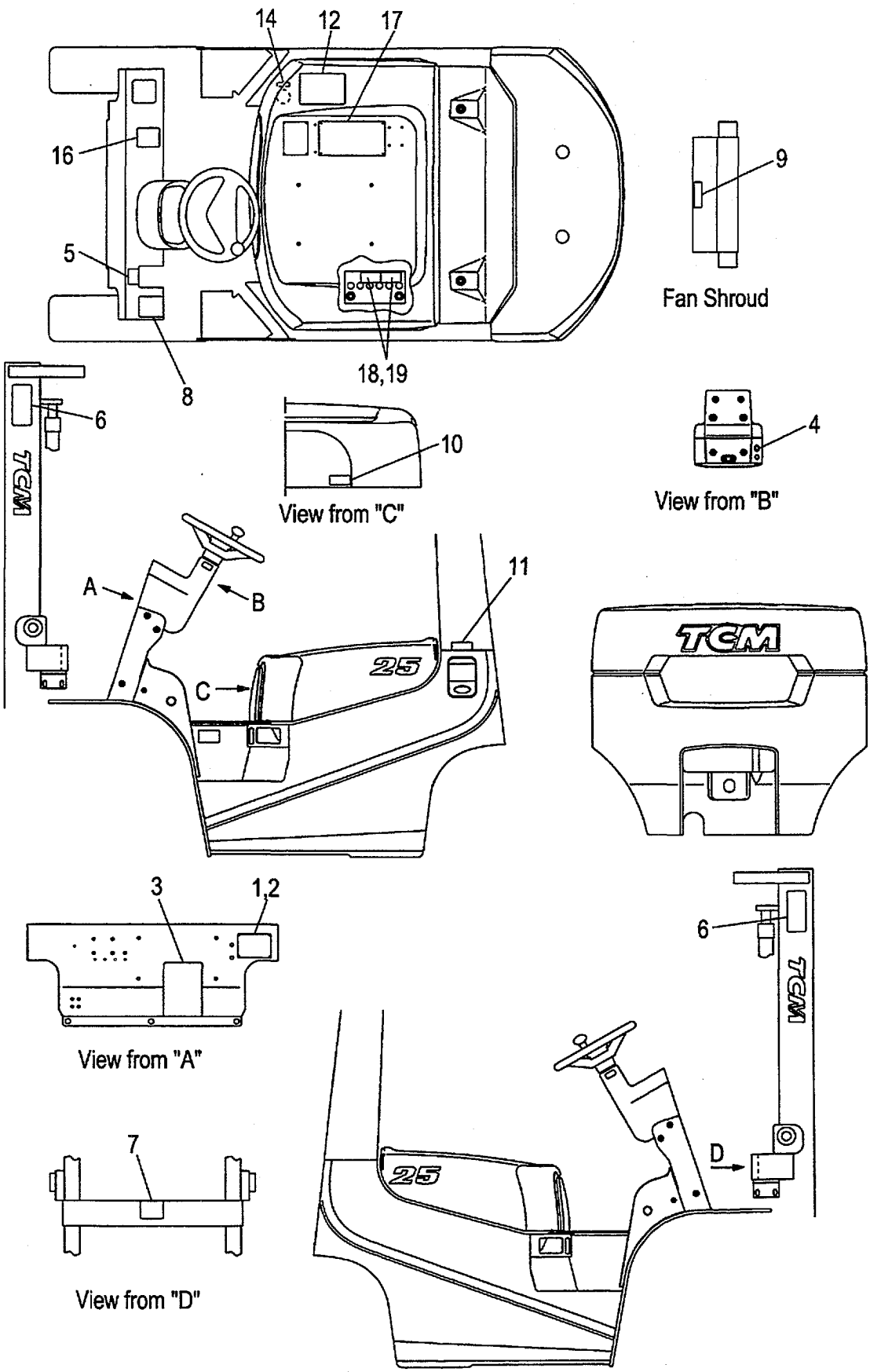

A:FG20C6H FG20T6H FG25C6H FG25T6H
B:FD20C6H FD20T6H FD25C6H FD25T6H

Item No	Part No.	Mark	Description		Req'd	Remarks : Serial No.
1	NO PART NO.	#	PLATE,NAME	ﾌﾟﾚｰﾄ	1	[EXB/ENGLISH]
-	NO PART NO.	#	PLATE,NAME	ﾌﾟﾚｰﾄ	1	[EXB/SPANISH]
-	NO PART NO.	#	PLATE,NAME	ﾌﾟﾚｰﾄ	1	[EXB/FRENCH]
-	NO PART NO.	#	PLATE,NAME	ﾌﾟﾚｰﾄ	1	[EXB/CHINESE]
-	NO PART NO.	#	PLATE,NAME	ﾌﾟﾚｰﾄ	1	[EXB/RUSSIAN]
2	216G9-12131		RIVET	ﾘﾍﾞｯﾄ	4	[EXB]
3	52672-72122	*	CHART,LUBRICATION	ﾁｬｰﾄ	1	[EXB/ENGLISH]
-	53652-82352		CHART,LUBRICATION	ﾁｬｰﾄ	1	[EXB/SPANISH]
-	22959-12052		CHART,LUBRICATION	ﾁｬｰﾄ	1	[EXB/FRENCH]
-	52672-82062		CHART,LUBRICATION	ﾁｬｰﾄ	1	[EXB/CHINESE]
-	225R9-12031		CHART,LUBRICATION	ﾁｬｰﾄ	1	[EXB/RUSSIAN]
4	216G9-12071	*	DECAL,STARTER-SWITCH	ﾃﾞｶﾙ	1	[EXB]
-	516G3-82011		DECAL,STARTER-SWITCH	ﾃﾞｶﾙ	1	[EXB/SPANISH]
-	232W9-12001		DECAL,STARTER-SWITCH	ﾃﾞｶﾙ	1	[EXB/RUSSIAN]
5	514A3-82002	*	DECAL,BRAKE-LEVER	ﾃﾞｶﾙ	1	[EXB/ENGLISH]
-	514A3-82012		DECAL,BRAKE-LEVER	ﾃﾞｶﾙ	1	[EXB/SPANISH]
-	514A3-82022		DECAL,BRAKE-LEVER	ﾃﾞｶﾙ	1	[EXB/FRENCH]
-	514A2-82012		DECAL,BRAKE-LEVER	ﾃﾞｶﾙ	1	[EXB/CHINESE]
-	225R9-12112		DECAL,BRAKE-LEVER	ﾃﾞｶﾙ	1	[EXB/RUSSIAN]
6	27419-12061	*	DECAL,MAST-CAUTION	ﾃﾞｶﾙ	2	[EXB]
-	27419-12062		DECAL,MAST-CAUTION	ﾃﾞｶﾙ	2	[EXB/RUSSIAN]
7	27419-12071	*	DECAL,CROSS-BEAM	ﾃﾞｶﾙ	1	[EXB]
-	27419-12072		DECAL,CROSS-BEAM	ﾃﾞｶﾙ	1	[EXB/RUSSIAN]
8	516G2-72711	*	DECAL,TIRE-CAUTION	ﾃﾞｶﾙ	1	[EXB/ENGLISH]
-	516G3-82211		DECAL,TIRE-CAUTION	ﾃﾞｶﾙ	1	[EXB/SPANISH]
-	516G3-82221		DECAL,TIRE-CAUTION	ﾃﾞｶﾙ	1	[EXB/FRENCH]
-	516G2-82061		DECAL,TIRE-CAUTION	ﾃﾞｶﾙ	1	[EXB/CHINESE]
-	232W9-12021		DECAL,TIRE-CAUTION	ﾃﾞｶﾙ	1	[EXB/RUSSIAN]
9	516G2-72701	*	DECAL,FAN-CAUTION	ﾃﾞｶﾙ	1	[EXB/ENGLISH]
-	516G3-82111		DECAL,FAN-CAUTION	ﾃﾞｶﾙ	1	[EXB/SPANISH]
-	516G3-82121		DECAL,FAN-CAUTION	ﾃﾞｶﾙ	1	[EXB/FRENCH]
-	516G2-82051		DECAL,FAN-CAUTION	ﾃﾞｶﾙ	1	[EXB/CHINESE]
-	232W9-12011		DECAL,FAN-CAUTION	ﾃﾞｶﾙ	1	[EXB/RUSSIAN]
10	539A2-82181		DECAL,FUEL-CAPACITY	ﾃﾞｶﾙ	1	[EXB/ENGLISH]
-	539B3-82001		DECAL,FUEL-CAPACITY	ﾃﾞｶﾙ	1	[EXB/SPANISH]
-	539B3-82011		DECAL,FUEL-CAPACITY	ﾃﾞｶﾙ	1	[EXB/FRENCH]
-	539A2-82281		DECAL,FUEL-CAPACITY	ﾃﾞｶﾙ	1	[EXB/CHINESE]
-	539A2-82071		DECAL,FUEL-CAPACITY	ﾃﾞｶﾙ	1	[EXB/RUSSIAN]
11	51232-82001		DECAL,GASOLINE	ﾃﾞｶﾙ	1	A [EXB/ENGLISH]
-	522A2-72111		DECAL,LIGHT-OIL	ﾃﾞｶﾙ	1	B [EXB/ENGLISH]
-	51232-82021		DECAL,GASOLINE	ﾃﾞｶﾙ	1	A [EXB/SPANISH]
-	51152-82022		DECAL,LIGHT-OIL	ﾃﾞｶﾙ	1	B [EXB/SPANISH]
-	51232-82011		DECAL,GASOLINE	ﾃﾞｶﾙ	1	A [EXB/FRENCH]
-	51152-82012		DECAL,LIGHT-OIL	ﾃﾞｶﾙ	1	B [EXB/FRENCH]

FIG.204 DECAL (2/2)[EXB]

(F5H291B0) ﾃﾞｶﾙ(2/2)

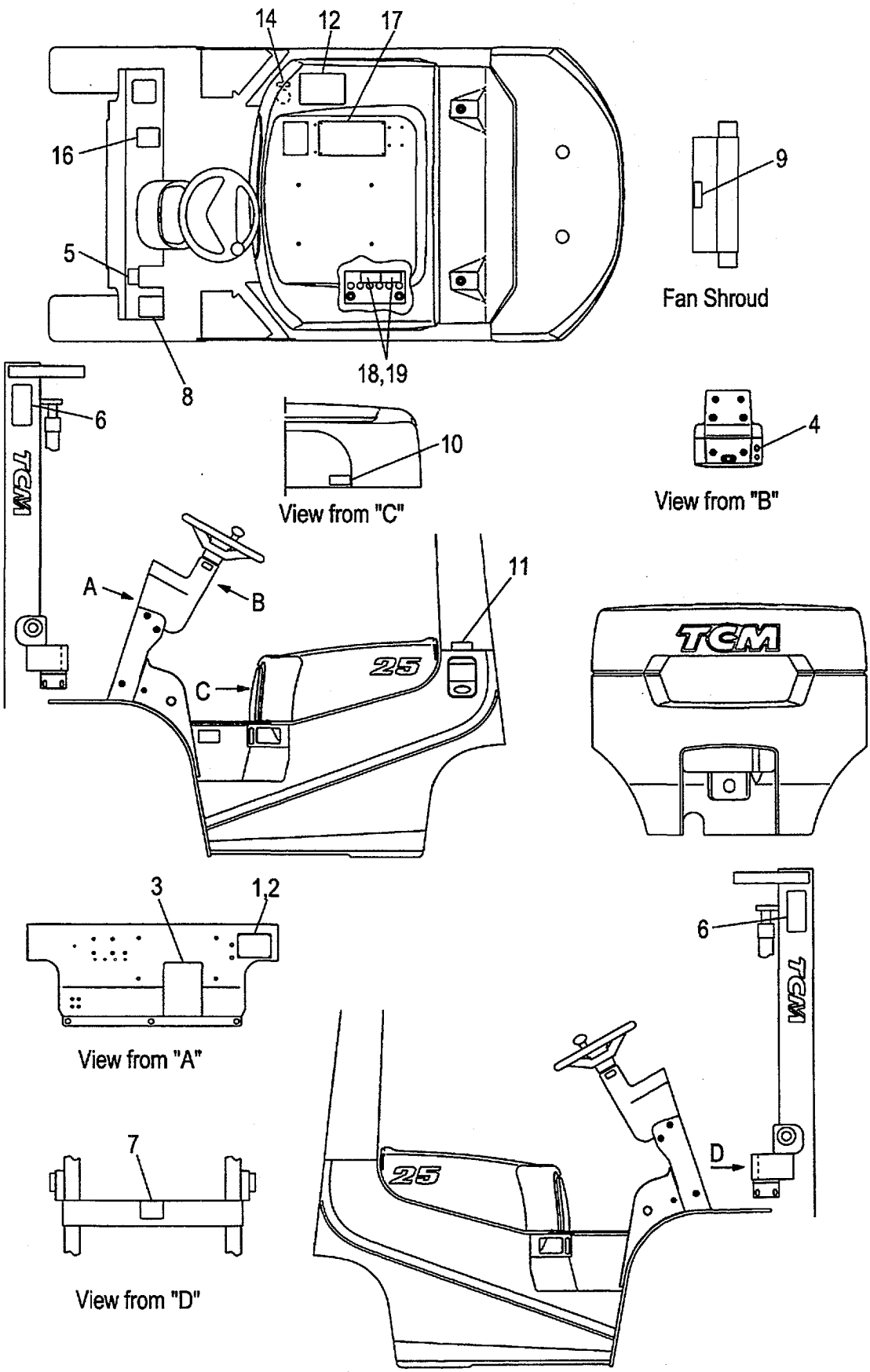

A:FG20C6H FG20T6H FG25C6H FG25T6H
B:FD20C6H FD20T6H FD25C6H FD25T6H

Item No	Part No.	Mark	Description	Req'd	Remarks : Serial No.
-	51232-82032		DECAL,GASOLINE デカル	1	A [EXB/CHINESE]
-	522A2-82151		DECAL,LIGHT-OIL デカル	1	B [EXB/CHINESE]
-	536G2-82021		DECAL,GASOLINE デカル	1	A [EXB/RUSSIAN]
-	225R9-12001		DECAL,LIGHT-OIL デカル	1	B [EXB/RUSSIAN]
12	53652-82551		DECAL,CAUTION デカル	1	[EXB/CHINESE]
13	225R9-12091	+	DECAL,BATTERY-SWITCH デカル	1	[EXB/RUSSIAN]
14	53652-82401		DECAL,OIL デカル	1	[EXB/SPANISH]
-	53652-82011		DECAL,OIL デカル	1	[EXB/FRENCH]
-	53652-82541		DECAL,OIL デカル	1	[EXB/CHINESE]
-	225R9-12071		DECAL,HYDRAULIC-OIL デカル	1	[EXB/RUSSIAN]
15	225R9-12081	+	DECAL,PAN-HEATER-OIL デカル	1	[EXB/RUSSIAN]
16	571A3-82361	*	DECAL,CAUTION デカル	1	[EXB]
17	516G3-82801	*	DECAL,CAUTION デカル	1	[EXB/ENGLISH]
-	516G3-82821		DECAL,CAUTION デカル	1	[EXB/SPANISH]
-	516G3-82831		DECAL,CAUTION デカル	1	[EXB/FRENCH]
-	52672-82073		DECAL,WARNING-PLATE デカル	1	[EXB/CHINESE]
-	225R9-12052		DECAL,CAUTION デカル	1	[EXB/RUSSIAN]
18	534A3-82311		DECAL,BATTERY,A デカル	1	[EXB/ENGLISH]
-	534A3-82331		DECAL,BATTERY,A デカル	1	[EXB/SPANISH]
-	534A3-82341		DECAL,BATTERY,A デカル	1	[EXB/FRENCH]
-	534A3-82531		DECAL,BATTERY デカル	1	[EXB/CHINESE]
-	232W9-12101		DECAL,BATTERY,A デカル	1	[EXB/RUSSIAN]
19	534A3-82421		DECAL,BATTERY,B デカル	1	[EXB/ENGLISH] (WITHOUT EXB/CHINESE)
-	534A3-82441		DECAL,BATTERY,B デカル	1	[EXB/SPANISH]
-	534A3-82451		DECAL,BATTERY,B デカル	1	[EXB/FRENCH]
-	232W9-12111		DECAL,BATTERY,B デカル	1	[EXB/RUSSIAN]
20	55592-82001	+	DECAL,CERTIFICATE デカル	1	[EXB]
K1	236A9-19811		KIT,DECAL デカルキット	1	[EXB/ENGLISH] INC.3-9,16,17 & FIG.202:4-6

FIG.205 DECAL (2/2)[EXC]

(F5H291C0) ﾃﾞｶﾙ(2/2)

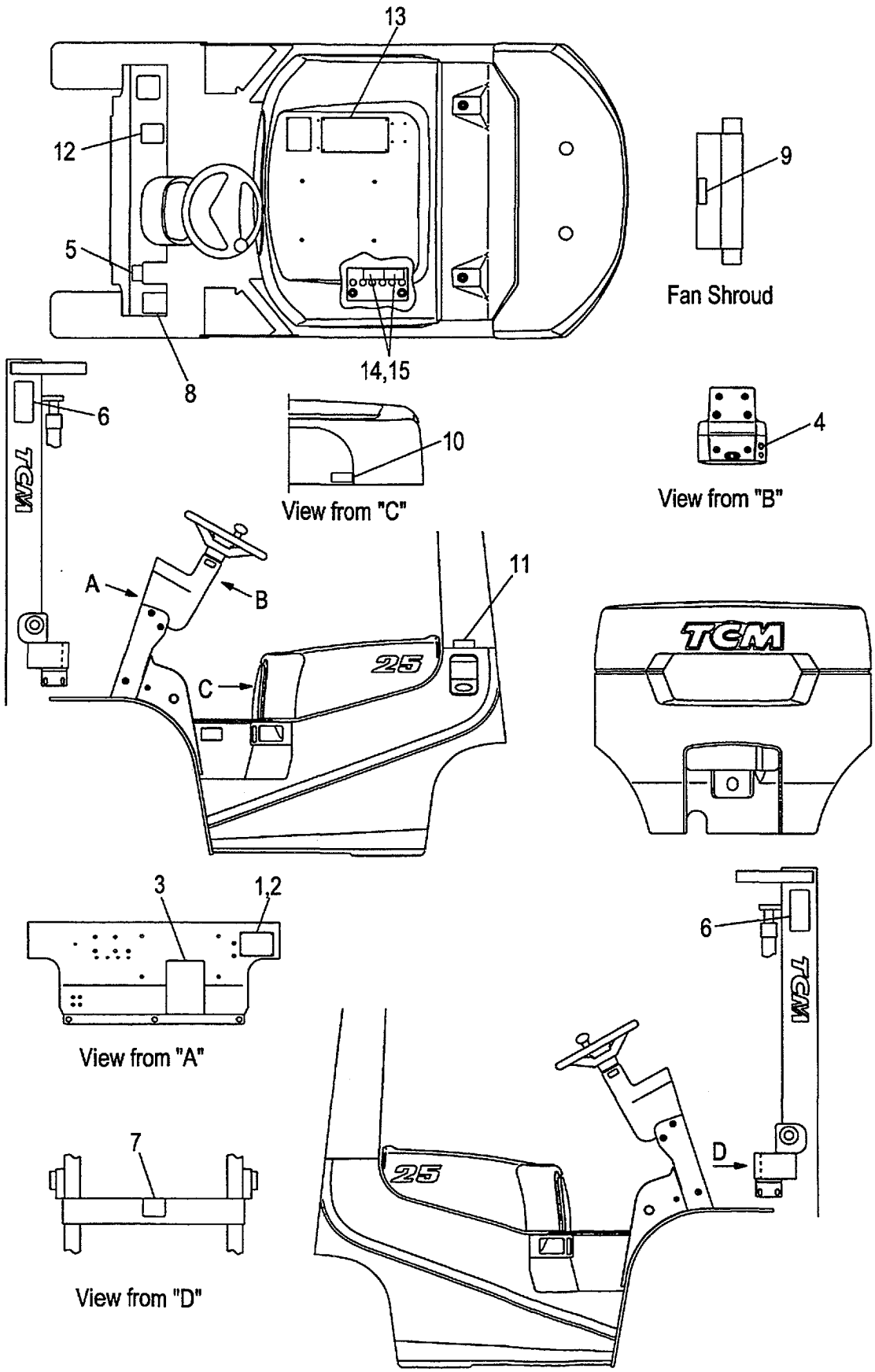

A:FG20C6H FG20T6H FG25C6H FG25T6H
B:FD20C6H FD20T6H FD25C6H FD25T6H

Item No	Part No.	Mark	Description		Req'd	Remarks : Serial No.
1	NO PART NO.	#	PLATE,NAME	ﾌﾟﾚｰﾄ	1	[EXC]
2	216G9-12131		RIVET	ﾘﾍﾞｯﾄ	4	[EXC]
3	52672-72122	*	CHART,LUBRICATION	ﾁｬｰﾄ	1	[EXC]
4	216G9-12071		DECAL,STARTER-SWITCH	ﾃﾞｶﾙ	1	[EXC]
5	514A3-82002	*	DECAL,BRAKE-LEVER	ﾃﾞｶﾙ	1	[EXC]
6	27419-12061	*	DECAL,MAST-CAUTION	ﾃﾞｶﾙ	2	[EXC]
7	27419-12071	*	DECAL,CROSS-BEAM	ﾃﾞｶﾙ	1	[EXC]
8	516G2-72711	*	DECAL,TIRE-CAUTION	ﾃﾞｶﾙ	1	[EXC]
9	516G2-72701	*	DECAL,FAN-CAUTION	ﾃﾞｶﾙ	1	[EXC]
10	539A2-82181		DECAL,FUEL-CAPACITY	ﾃﾞｶﾙ	1	[EXC]
11	51232-82001		DECAL,GASOLINE	ﾃﾞｶﾙ	1	A [EXC]
-	522A2-72111		DECAL,LIGHT-OIL	ﾃﾞｶﾙ	1	B [EXC]
12	571A3-82361	*	DECAL,CAUTION	ﾃﾞｶﾙ	1	[EXC]
13	516G3-82801	*	DECAL,CAUTION	ﾃﾞｶﾙ	1	[EXC]
14	534A3-82311		DECAL,BATTERY,A	ﾃﾞｶﾙ	1	[EXC]
15	534A3-82421		DECAL,BATTERY,B	ﾃﾞｶﾙ	1	[EXC]
16	55592-82001	+	DECAL,CERTIFICATE	ﾃﾞｶﾙ	1	[EXC]
K1	236A9-19811		KIT,DECAL	ﾃﾞｶﾙｷｯﾄ	1	[EXC] INC.3-9,12,13 & FIG.202:4-6

FIG.206 DECAL (2/2)[EXE]

(F5H291E0) ﾃﾞｶﾙ(2/2)

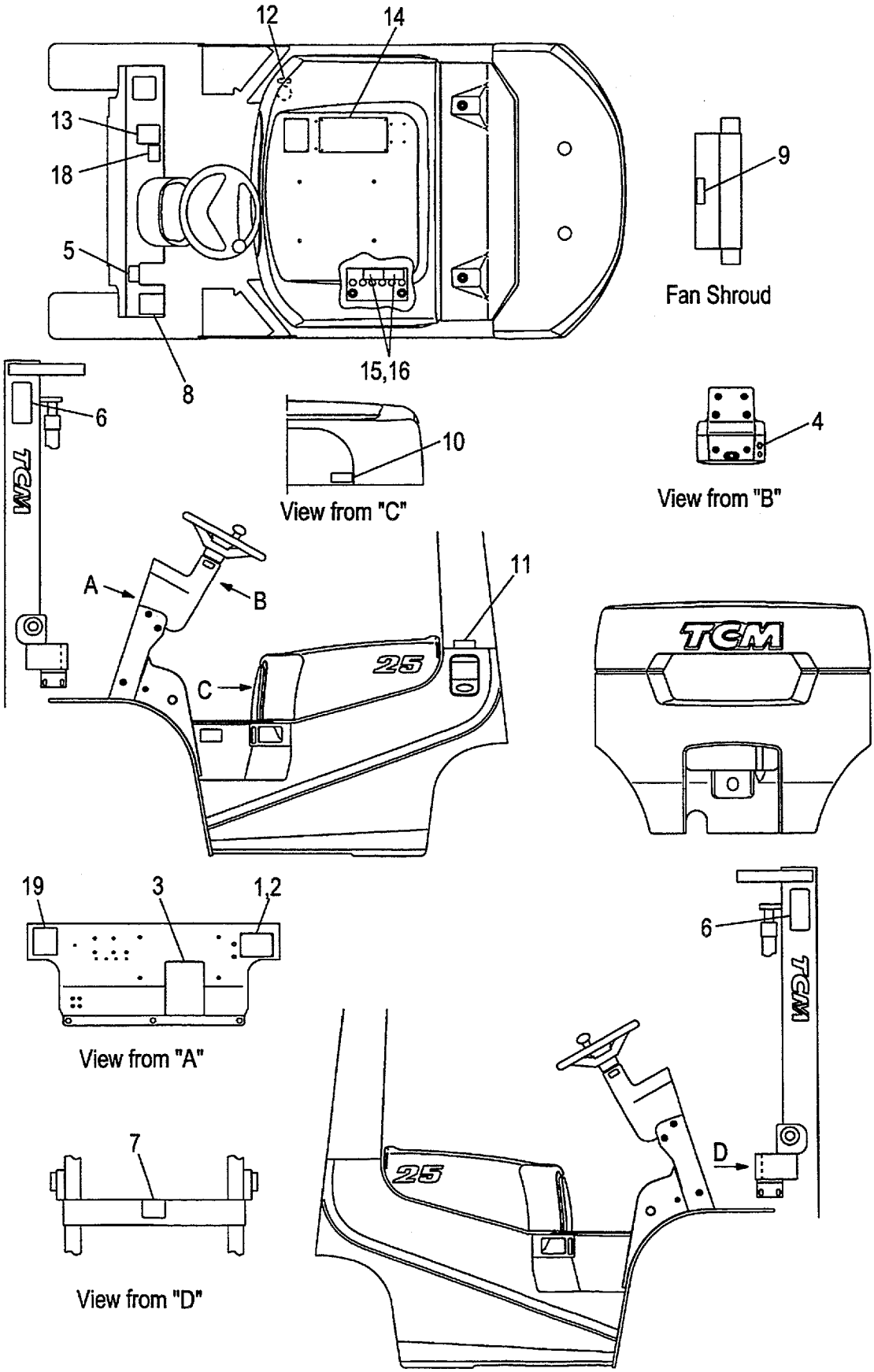

A:FG20C6H FG25C6H C:FD20C6H FD25C6H
B:FG20T6H FG25T6H D:FD20T6H FD25T6H

Item No	Part No.	Mark	Description		Req'd	Remarks : Serial No.
1	NO PART NO.	#	PLATE,NAME	ﾌﾟﾚｰﾄ	1	[EXE/ENGLISH]
-	NO PART NO.	#	PLATE,NAME	ﾌﾟﾚｰﾄ	1	[EXE/SPANISH]
-	NO PART NO.	#	PLATE,NAME	ﾌﾟﾚｰﾄ	1	[EXE/FRENCH]
-	NO PART NO.	#	PLATE,NAME	ﾌﾟﾚｰﾄ	1	[EXE/GERMAN]
-	NO PART NO.	#	PLATE,NAME	ﾌﾟﾚｰﾄ	1	[EXE/DUTCH]
-	NO PART NO.	#	PLATE,NAME	ﾌﾟﾚｰﾄ	1	[EXE/DANISH]
-	NO PART NO.	#	PLATE,NAME	ﾌﾟﾚｰﾄ	1	[EXE/ITALIAN]
-	NO PART NO.	#	PLATE,NAME	ﾌﾟﾚｰﾄ	1	[EXE/GREEK]
-	NO PART NO.	#	PLATE,NAME	ﾌﾟﾚｰﾄ	1	[EXE/PORTUGUESE]
2	216G9-12131		RIVET	ﾘﾍﾞｯﾄ	4	[EXE]
3	52672-72122	*	CHART,LUBRICATION	ﾁｬｰﾄ	1	[EXE/ENGLISH]
-	53652-82352		CHART,LUBRICATION	ﾁｬｰﾄ	1	[EXE/SPANISH]
-	22959-12052		CHART,LUBRICATION	ﾁｬｰﾄ	1	[EXE/FRENCH]
-	55953-02032		CHART,LUBRICATION	ﾁｬｰﾄ	1	[EXE/GERMAN]
-	522A3-83081		CHART,LUBRICATION	ﾁｬｰﾄ	1	[EXE/DUTCH]
-	522A3-83281		CHART,LUBRICATION	ﾁｬｰﾄ	1	[EXE/DANISH]
-	522A3-83481		CHART,LUBRICATION	ﾁｬｰﾄ	1	[EXE/ITALIAN]
-	522A3-83681		CHART,LUBRICATION	ﾁｬｰﾄ	1	[EXE/GREEK]
-	522A3-83881		CHART,LUBRICATION	ﾁｬｰﾄ	1	[EXE/PORTUGUESE]
4	216G9-12071		DECAL,STARTER-SWITCH	ﾃﾞｶﾙ	1	[EXE]
-	516G3-82011		DECAL,STARTER-SWITCH	ﾃﾞｶﾙ	1	[EXE/SPANISH]
-	516G3-82001		DECAL,STARTER-SWITCH	ﾃﾞｶﾙ	1	[EXE/GERMAN]
-	516G3-82021		DECAL,STARTER-SWITCH	ﾃﾞｶﾙ	1	[EXE/DUTCH]
-	516G3-82031		DECAL,STARTER-SWITCH	ﾃﾞｶﾙ	1	[EXE/DANISH]
-	516G3-82041		DECAL,STARTER-SWITCH	ﾃﾞｶﾙ	1	[EXE/ITALIAN]
-	516G3-82051		DECAL,STARTER-SWITCH	ﾃﾞｶﾙ	1	[EXE/GREEK]
5	514A3-82002	*	DECAL,BRAKE-LEVER	ﾃﾞｶﾙ	1	[EXE/ENGLISH]
-	514A3-82012		DECAL,BRAKE-LEVER	ﾃﾞｶﾙ	1	[EXE/SPANISH]
-	514A3-82022		DECAL,BRAKE-LEVER	ﾃﾞｶﾙ	1	[EXE/FRENCH]
-	514A3-02002		DECAL,BRAKE-LEVER	ﾃﾞｶﾙ	1	[EXE/GERMAN]
-	514A3-82032		DECAL,BRAKE-LEVER	ﾃﾞｶﾙ	1	[EXE/DUTCH]
-	514A3-82042		DECAL,BRAKE-LEVER	ﾃﾞｶﾙ	1	[EXE/DANISH]
-	514A3-82052		DECAL,BRAKE-LEVER	ﾃﾞｶﾙ	1	[EXE/ITALIAN]
-	514A3-82062		DECAL,BRAKE-LEVER	ﾃﾞｶﾙ	1	[EXE/GREEK]
-	514A3-82072		DECAL,BRAKE-LEVER	ﾃﾞｶﾙ	1	[EXE/PORTUGUESE]
6	27419-12061	*	DECAL,MAST-CAUTION	ﾃﾞｶﾙ	2	[EXE]
7	27419-12071	*	DECAL,CROSS-BEAM	ﾃﾞｶﾙ	1	[EXE]
8	516G2-72711	*	DECAL,TIRE-CAUTION	ﾃﾞｶﾙ	1	[EXE/ENGLISH]
-	516G3-82211		DECAL,TIRE-CAUTION	ﾃﾞｶﾙ	1	[EXE/SPANISH]
-	516G3-82221		DECAL,TIRE-CAUTION	ﾃﾞｶﾙ	1	[EXE/FRENCH]
-	516G3-82201		DECAL,TIRE-CAUTION	ﾃﾞｶﾙ	1	[EXE/GERMAN]
-	516G3-82232		DECAL,TIRE-CAUTION	ﾃﾞｶﾙ	1	[EXE/DUTCH]
-	516G3-82241		DECAL,TIRE-CAUTION	ﾃﾞｶﾙ	1	[EXE/DANISH]
-	516G3-82251		DECAL,TIRE-CAUTION	ﾃﾞｶﾙ	1	[EXE/ITALIAN]
-	516G3-82261		DECAL,TIRE-CAUTION	ﾃﾞｶﾙ	1	[EXE/GREEK]
-	516G3-82271		DECAL,TIRE-CAUTION	ﾃﾞｶﾙ	1	[EXE/PORTUGUESE]
9	516G2-72701	*	DECAL,FAN-CAUTION	ﾃﾞｶﾙ	1	[EXE/ENGLISH]
-	516G3-82111		DECAL,FAN-CAUTION	ﾃﾞｶﾙ	1	[EXE/SPANISH]
-	516G3-82121		DECAL,FAN-CAUTION	ﾃﾞｶﾙ	1	[EXE/FRENCH]
-	516G3-82101		DECAL,FAN-CAUTION	ﾃﾞｶﾙ	1	[EXE/GERMAN]

FIG.206 DECAL (2/2)[EXE]

(F5H291E0) ﾃﾞｶﾙ(2/2)

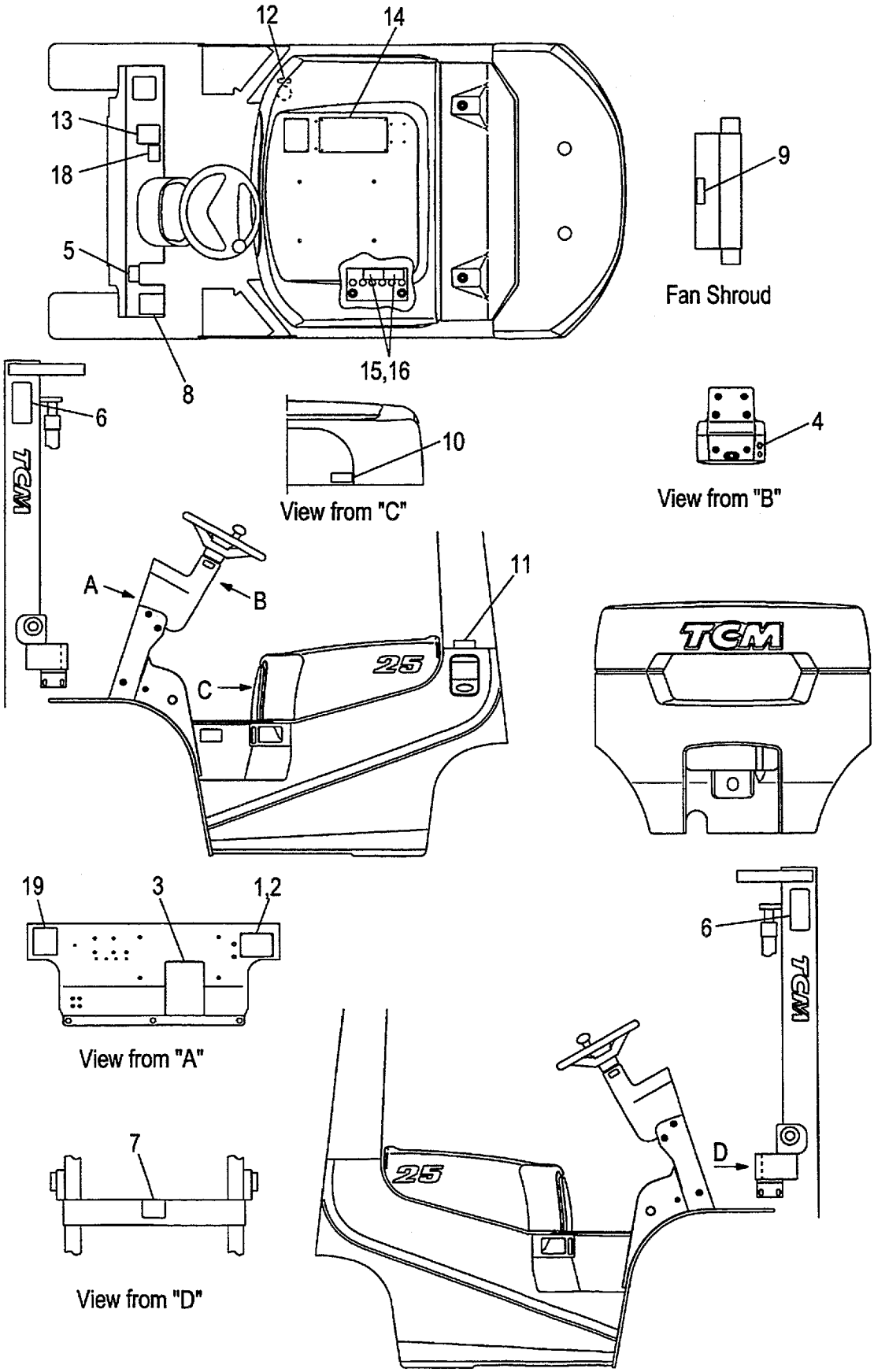

A:FG20C6H FG25C6H C:FD20C6H FD25C6H
B:FG20T6H FG25T6H D:FD20T6H FD25T6H

Item No	Part No.	Mark	Description	Req'd	Remarks : Serial No.
-	516G3-82131		DECAL,FAN-CAUTION デカル	1	[EXE/DUTCH]
-	516G3-82141		DECAL,FAN-CAUTION デカル	1	[EXE/DANISH]
-	516G3-82151		DECAL,FAN-CAUTION デカル	1	[EXE/ITALIAN]
-	516G3-82161		DECAL,FAN-CAUTION デカル	1	[EXE/GREEK]
-	516G3-82171		DECAL,FAN-CAUTION デカル	1	[EXE/PORTUGUESE]
10	539A2-82181		DECAL,FUEL-CAPACITY デカル	1	[EXE/ENGLISH]
-	539B3-82001		DECAL,FUEL-CAPACITY デカル	1	[EXE/SPANISH]
-	539B3-82011		DECAL,FUEL-CAPACITY デカル	1	[EXE/FRENCH]
-	539B3-82021		DECAL,FUEL-CAPACITY デカル	1	[EXE/GERMAN]
-	539B3-82031		DECAL,FUEL-CAPACITY デカル	1	[EXE/DUTCH]
-	539B3-82041		DECAL,FUEL-CAPACITY デカル	1	[EXE/DANISH]
-	539B3-82051		DECAL,FUEL-CAPACITY デカル	1	[EXE/ITALIAN]
-	539B3-82061		DECAL,FUEL-CAPACITY デカル	1	[EXE/GREEK]
-	539B3-82071		DECAL,FUEL-CAPACITY デカル	1	[EXE/PORTUGUESE]
11	51232-82001		DECAL,GASOLINE デカル	1	A,B [EXE/ENGLISH]
-	522A2-72111		DECAL,LIGHT-OIL デカル	1	C,D [EXE/ENGLISH]
-	51232-82021		DECAL,GASOLINE デカル	1	A,B [EXE/SPANISH]
-	51152-82022		DECAL,LIGHT-OIL デカル	1	C,D [EXE/SPANISH]
-	51232-82011		DECAL,GASOLINE デカル	1	A,B [EXE/FRENCH]
-	51152-82012		DECAL,LIGHT-OIL デカル	1	C,D [EXE/FRENCH]
-	51233-02011		DECAL,GASOLINE デカル	1	A,B [EXE/GERMAN]
-	51153-02001		DECAL,LIGHT-OIL デカル	1	C,D [EXE/GERMAN]
-	51233-83021		DECAL,GASOLINE デカル	1	A,B [EXE/DUTCH]
-	522A3-83021		DECAL,LIGHT-OIL デカル	1	C,D [EXE/DUTCH]
-	51233-83221		DECAL,GASOLINE デカル	1	A,B [EXE/DANISH]
-	522A3-83221		DECAL,LIGHT-OIL デカル	1	C,D [EXE/DANISH]
-	51233-83421		DECAL,GASOLINE デカル	1	A,B [EXE/ITALIAN]
-	522A3-83421		DECAL,LIGHT-OIL デカル	1	C,D [EXE/ITALIAN]
-	51233-83621		DECAL,GASOLINE デカル	1	A,B [EXE/GREEK]
-	522A3-83621		DECAL,LIGHT-OIL デカル	1	C,D [EXE/GREEK]
-	51233-83821		DECAL,GASOLINE デカル	1	A,B [EXE/PORTUGUESE]
-	522A3-83821		DECAL,LIGHT-OIL デカル	1	C,D [EXE/PORTUGUESE]

FIG.206 DECAL (2/2)[EXE]

(F5H291E0) ﾃﾞｶﾙ(2/2)

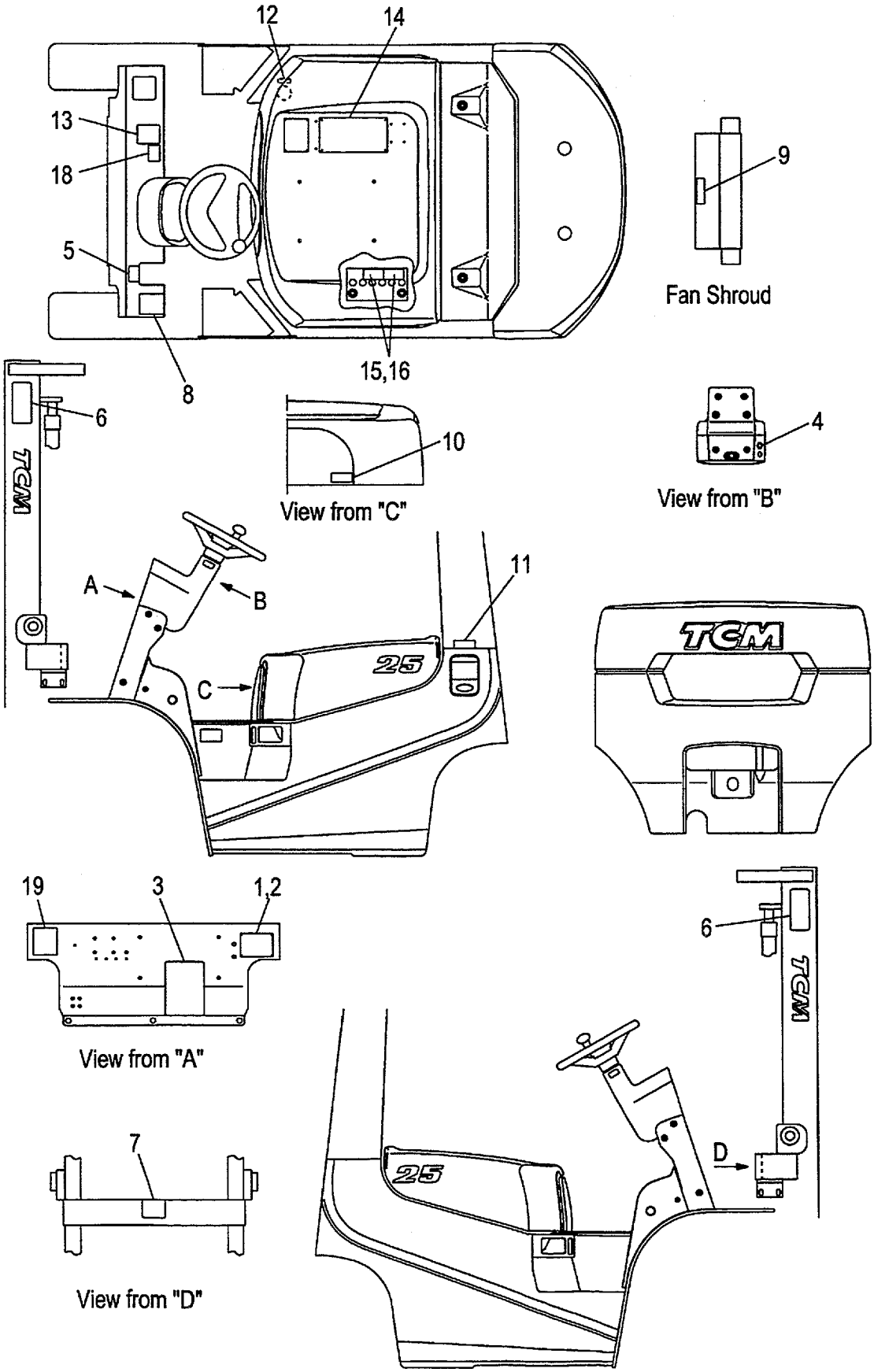

A:FG20C6H FG25C6H C:FD20C6H FD25C6H
B:FG20T6H FG25T6H D:FD20T6H FD25T6H

Item No	Part No.	Mark	Description	Req'd	Remarks : Serial No.
12	53652-82401		DECAL,OIL デカル	1	[EXE/SPANISH]
-	53652-82011		DECAL,OIL デカル	1	[EXE/FRENCH]
-	51233-02021		DECAL,OIL デカル	1	[EXE/GERMAN]
-	522A3-83061		DECAL,OIL デカル	1	[EXE/DUTCH][EXE/DANISH]
-	522A3-83461		DECAL,OIL デカル	1	[EXE/ITALIAN]
-	522A3-83661		DECAL,OIL デカル	1	[EXE/GREEK]
-	522A3-83861		DECAL,OIL デカル	1	[EXE/PORTUGUESE]
13	571A3-82361	*	DECAL,CAUTION デカル	1	[EXE]
14	516G3-82801	*	DECAL,CAUTION デカル	1	[EXE/ENGLISH]
-	516G3-82821		DECAL,CAUTION デカル	1	[EXE/SPANISH]
-	516G3-82831		DECAL,CAUTION デカル	1	[EXE/FRENCH]
-	516G3-82811		DECAL,CAUTION デカル	1	[EXE/GERMAN]
-	516G3-82841		DECAL,CAUTION デカル	1	[EXE/DUTCH]
-	516G3-82851		DECAL,CAUTION デカル	1	[EXE/DANISH]
-	516G3-82861		DECAL,CAUTION デカル	1	[EXE/ITALIAN]
-	516G3-82871		DECAL,CAUTION デカル	1	[EXE/GREEK]
-	516G3-82881		DECAL,CAUTION デカル	1	[EXE/PORTUGUESE]
15	534A3-82311		DECAL,BATTERY,A デカル	1	[EXE/ENGLISH]
-	534A3-82331		DECAL,BATTERY,A デカル	1	[EXE/SPANISH]
-	534A3-82341		DECAL,BATTERY,A デカル	1	[EXE/FRENCH]
-	534A3-82321		DECAL,BATTERY,A デカル	1	[EXE/GERMAN]
-	534A3-82351		DECAL,BATTERY,A デカル	1	[EXE/DUTCH]
-	534A3-82361		DECAL,BATTERY,A デカル	1	[EXE/DANISH]
-	534A3-82371		DECAL,BATTERY,A デカル	1	[EXE/ITALIAN]
-	534A3-82381		DECAL,BATTERY,A デカル	1	[EXE/GREEK]
-	534A3-82391		DECAL,BATTERY,A デカル	1	[EXE/PORTUGUESE]
16	534A3-82421		DECAL,BATTERY,B デカル	1	[EXE/ENGLISH]
-	534A3-82441		DECAL,BATTERY,B デカル	1	[EXE/SPANISH]
-	534A3-82451		DECAL,BATTERY,B デカル	1	[EXE/FRENCH]
-	534A3-82431		DECAL,BATTERY,B デカル	1	[EXE/GERMAN]
-	534A3-82461		DECAL,BATTERY,B デカル	1	[EXE/DUTCH]
-	534A3-82471		DECAL,BATTERY,B デカル	1	[EXE/DANISH]
-	534A3-82481		DECAL,BATTERY,B デカル	1	[EXE/ITALIAN]
-	534A3-82491		DECAL,BATTERY,B デカル	1	[EXE/GREEK]
-	534A3-82501		DECAL,BATTERY,B デカル	1	[EXE/PORTUGUESE]
17	55592-82001	+	DECAL,CERTIFICATE デカル	1	[EXE]
18	535H3-82411		DECAL,CREEP-CAUTION デカル	1	B,D [EXE/ENGLISH]
-	535H3-82421		DECAL,CREEP-CAUTION デカル	1	B,D [EXE/SPANISH]
-	535H3-82431		DECAL,CREEP-CAUTION デカル	1	B,D [EXE/FRENCH]
-	535H3-82441		DECAL,CREEP-CAUTION デカル	1	B,D [EXE/GERMAN]
-	535H3-82451		DECAL,CREEP-CAUTION デカル	1	B,D [EXE/DUTCH]
-	535H3-82461		DECAL,CREEP-CAUTION デカル	1	B,D [EXE/DANISH]
-	535H3-82471		DECAL,CREEP-CAUTION デカル	1	B,D [EXE/ITALIAN]

FIG.206 DECAL (2/2)[EXE]

(F5H291E0) ﾃﾞｶﾙ(2/2)

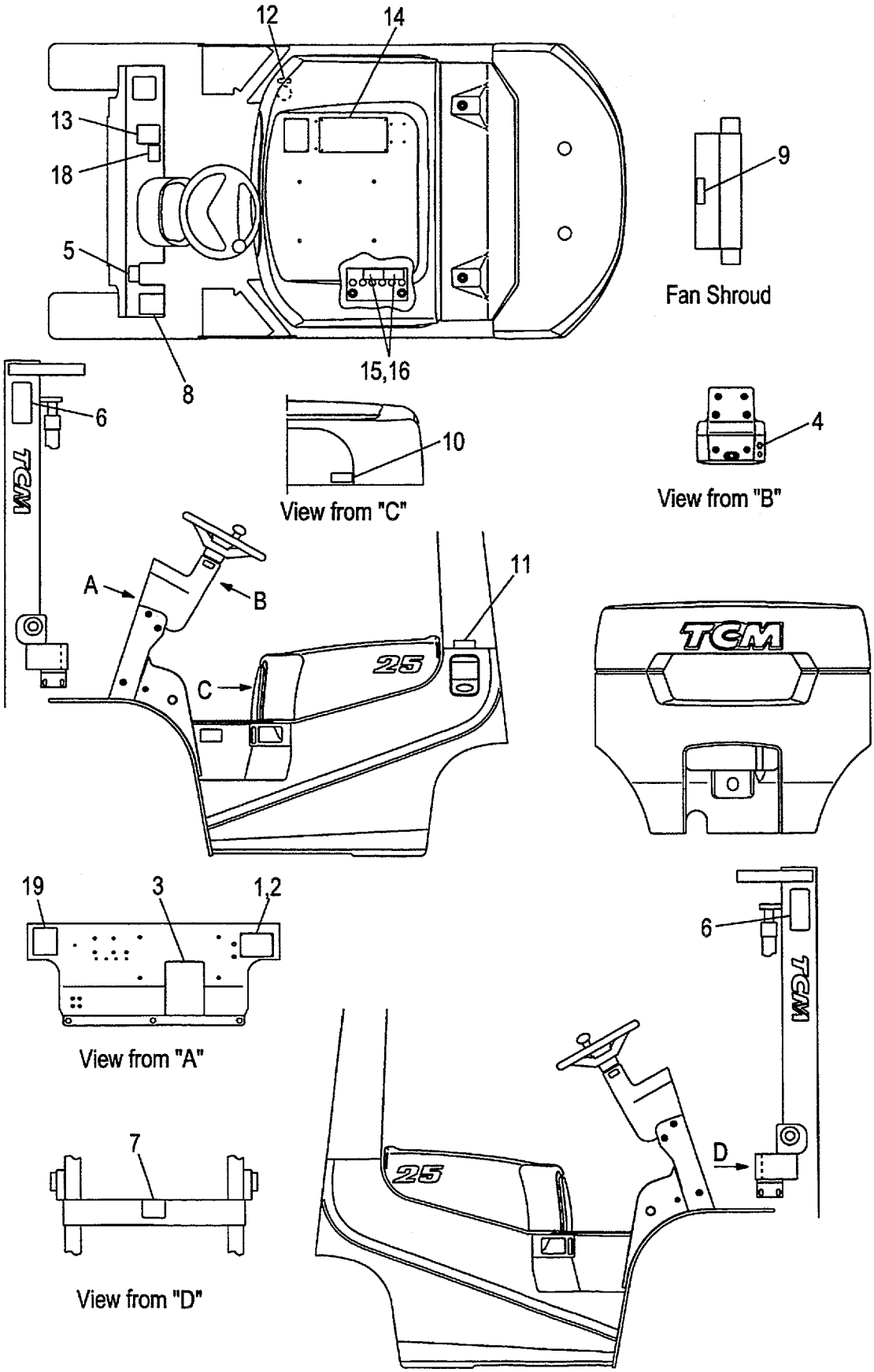

A:FG20C6H FG25C6H C:FD20C6H FD25C6H
B:FG20T6H FG25T6H D:FD20T6H FD25T6H

Item No	Part No.	Mark	Description	Req'd	Remarks : Serial No.
-	535H3-82481		DECAL,CREEP-CAUTION デカル	1	B,D [EXE/GREEK]
-	535H3-82491		DECAL,CREEP-CAUTION デカル	1	B,D [EXE/PORTUGUESE]
19	535E3-82241		DECAL,EC-SOUND デカル	1	C,D [EXE](NEW PART)
K1	236A9-19811		KIT,DECAL デカルキット	1	[EXE/ENGLISH] INC.3-9,13,14 & FIG.202:4-6

FIG.207 DECAL (2/2)[EXK]

(F5H291K0) ﾃﾞｶﾙ(2/2)

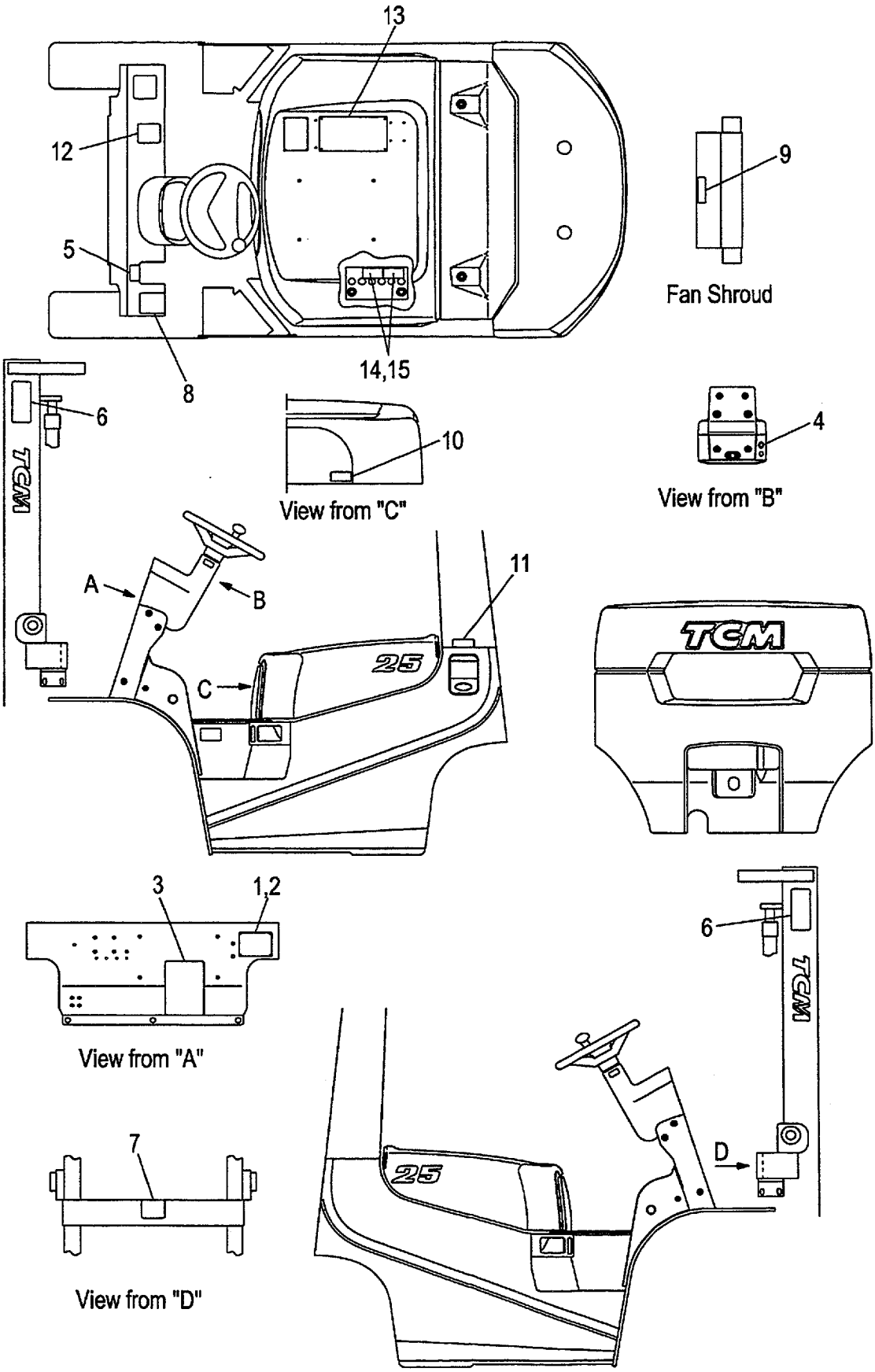

A:FG20C6H FG20T6H FG25C6H FG25T6H
B:FD20C6H FD20T6H FD25C6H FD25T6H

Item No	Part No.	Mark	Description		Req'd	Remarks : Serial No.
1	NO PART NO.	#	PLATE,NAME	ﾌﾟﾚｰﾄ	1	[EXK]
2	216G9-12131		RIVET	ﾘﾍﾞｯﾄ	4	[EXK]
3	52672-72122	*	CHART,LUBRICATION	ﾁｬｰﾄ	1	[EXK]
4	216G9-12071		DECAL,STARTER-SWITCH	ﾃﾞｶﾙ	1	[EXK]
5	514A3-82002	*	DECAL,BRAKE-LEVER	ﾃﾞｶﾙ	1	[EXK]
6	27419-12061	*	DECAL,MAST-CAUTION	ﾃﾞｶﾙ	2	[EXK]
7	27419-12071	*	DECAL,CROSS-BEAM	ﾃﾞｶﾙ	1	[EXK]
8	516G2-72711	*	DECAL,TIRE-CAUTION	ﾃﾞｶﾙ	1	[EXK]
9	516G2-72701	*	DECAL,FAN-CAUTION	ﾃﾞｶﾙ	1	[EXK]
10	539A2-82181		DECAL,FUEL-CAPACITY	ﾃﾞｶﾙ	1	[EXK]
11	51232-82001		DECAL,GASOLINE	ﾃﾞｶﾙ	1	A
						[EXK]
-	522A2-72111		DECAL,LIGHT-OIL	ﾃﾞｶﾙ	1	B
						[EXK]
12	571A3-82361	*	DECAL,CAUTION	ﾃﾞｶﾙ	1	[EXK]
13	516G3-82801	*	DECAL,CAUTION	ﾃﾞｶﾙ	1	[EXK]
14	534A3-82311		DECAL,BATTERY,A	ﾃﾞｶﾙ	1	[EXK]
15	534A3-82421		DECAL,BATTERY,B	ﾃﾞｶﾙ	1	[EXK]
16	55592-82001	+	DECAL,CERTIFICATE	ﾃﾞｶﾙ	1	[EXK]
K1	236A9-19811		KIT,DECAL	ﾃﾞｶﾙｷｯﾄ	1	[EXK]
						INC.3-9,12,13 & FIG.202:4-6

FIG.208 DECAL (2/2)[EXN]

(F5H291N0) ﾃﾞｶﾙ(2/2)

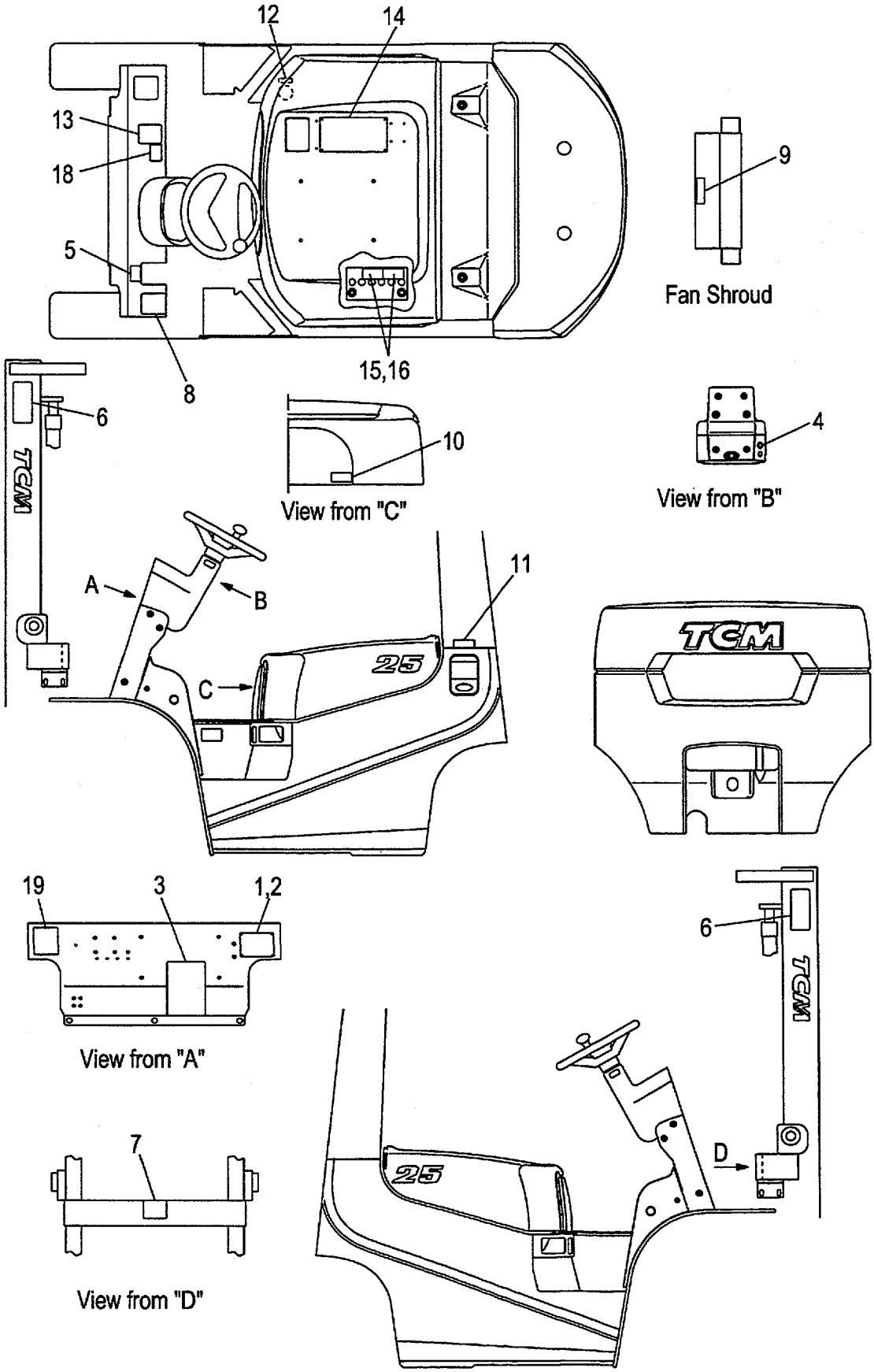

A:FG20C6H FG25C6H C:FD20C6H FD25C6H
B:FG20T6H FG25T6H D:FD20T6H FD25T6H

Item No	Part No.	Mark	Description		Req'd	Remarks : Serial No.
1	NO PART NO.	#	PLATE,NAME	ﾌﾟﾚｰﾄ	1	[EXN/ENGLISH]
-	NO PART NO.	#	PLATE,NAME	ﾌﾟﾚｰﾄ	1	[EXN/DANISH]
-	NO PART NO.	#	PLATE,NAME	ﾌﾟﾚｰﾄ	1	[EXN/SWEDISH]
-	NO PART NO.	#	PLATE,NAME	ﾌﾟﾚｰﾄ	1	[EXN/FINISH]
2	216G9-12131		RIVET	ﾘﾍﾞｯﾄ	4	[EXN]
3	52672-72122	*	CHART,LUBRICATION	ﾁｬｰﾄ	1	[EXN/ENGLISH]
-	522A3-83281		CHART,LUBRICATION	ﾁｬｰﾄ	1	[EXN/DANISH]
-	529F3-82171		CHART,LUBRICATION	ﾁｬｰﾄ	1	[EXN/SWEDISH]
-	529F3-82161		CHART,LUBRICATION	ﾁｬｰﾄ	1	[EXN/FINISH]
4	216G9-12071		DECAL,STARTER-SWITCH	ﾃﾞｶﾙ	1	[EXN/ENGLISH]
-	516G3-82031		DECAL,STARTER-SWITCH	ﾃﾞｶﾙ	1	[EXN/DANISH]
-	516G3-82071		DECAL,STARTER-SWITCH	ﾃﾞｶﾙ	1	[EXN/SWEDISH]
-	516G3-82061		DECAL,STARTER-SWITCH	ﾃﾞｶﾙ	1	[EXN/FINISH]
5	514A3-82002	*	DECAL,BRAKE-LEVER	ﾃﾞｶﾙ	1	[EXN/ENGLISH]
-	514A3-82042		DECAL,BRAKE-LEVER	ﾃﾞｶﾙ	1	[EXN/DANISH]
-	529F3-82252		DECAL,BRAKE-LEVER	ﾃﾞｶﾙ	1	[EXN/SWEDISH]
-	529F3-82242		DECAL,BRAKE-LEVER	ﾃﾞｶﾙ	1	[EXN/FINISH]
6	27419-12061	*	DECAL,MAST-CAUTION	ﾃﾞｶﾙ	2	[EXN]
7	27419-12071	*	DECAL,CROSS-BEAM	ﾃﾞｶﾙ	1	[EXN]
8	516G2-72711	*	DECAL,TIRE-CAUTION	ﾃﾞｶﾙ	1	[EXN/ENGLISH]
-	516G3-82241		DECAL,TIRE-CAUTION	ﾃﾞｶﾙ	1	[EXN/DANISH]
-	516G3-82291		DECAL,TIRE-CAUTION	ﾃﾞｶﾙ	1	[EXN/SWEDISH]
-	516G3-82281		DECAL,TIRE-CAUTION	ﾃﾞｶﾙ	1	[EXN/FINISH]
9	516G2-72701	*	DECAL,FAN-CAUTION	ﾃﾞｶﾙ	1	[EXN/ENGLISH]
-	516G3-82141		DECAL,FAN-CAUTION	ﾃﾞｶﾙ	1	[EXN/DANISH]
-	516G3-82191		DECAL,FAN-CAUTION	ﾃﾞｶﾙ	1	[EXN/SWEDISH]
-	516G3-82181		DECAL,FAN-CAUTION	ﾃﾞｶﾙ	1	[EXN/FINISH]
10	539A2-82181		DECAL,FUEL-CAPACITY	ﾃﾞｶﾙ	1	[EXN/ENGLISH]
-	539B3-82041		DECAL,FUEL-CAPACITY	ﾃﾞｶﾙ	1	[EXN/DANISH]
-	539B3-82091		DECAL,FUEL-CAPACITY	ﾃﾞｶﾙ	1	[EXN/SWEDISH]
-	539B3-82081		DECAL,FUEL-CAPACITY	ﾃﾞｶﾙ	1	[EXN/FINISH]
11	51232-82001		DECAL,GASOLINE	ﾃﾞｶﾙ	1	A,B [EXN/ENGLISH]
-	522A2-72111		DECAL,LIGHT-OIL	ﾃﾞｶﾙ	1	C,D [EXN/ENGLISH]
-	51233-83221		DECAL,GASOLINE	ﾃﾞｶﾙ	1	A,B [EXN/DANISH]
-	522A3-83221		DECAL,LIGHT-OIL	ﾃﾞｶﾙ	1	C,D [EXN/DANISH]
-	528F3-82031		DECAL,GASOLINE	ﾃﾞｶﾙ	1	A,B [EXN/SWEDISH]
-	529F3-82051		DECAL,LIGHT-OIL	ﾃﾞｶﾙ	1	C,D [EXN/SWEDISH]
-	528F3-82021		DECAL,GASOLINE	ﾃﾞｶﾙ	1	A,B [EXN/FINISH]
-	529F3-82041		DECAL,LIGHT-OIL	ﾃﾞｶﾙ	1	C,D [EXN/FINISH]
12	522A3-83061		DECAL,OIL	ﾃﾞｶﾙ	1	[EXN/DANISH]
-	529F3-82071		DECAL,OIL	ﾃﾞｶﾙ	1	[EXN/SWEDISH]
-	529F3-82061		DECAL,OIL	ﾃﾞｶﾙ	1	[EXN/FINISH]

FIG.208 DECAL (2/2)[EXN]

(F5H291N0) ﾃﾞｶﾙ(2/2)

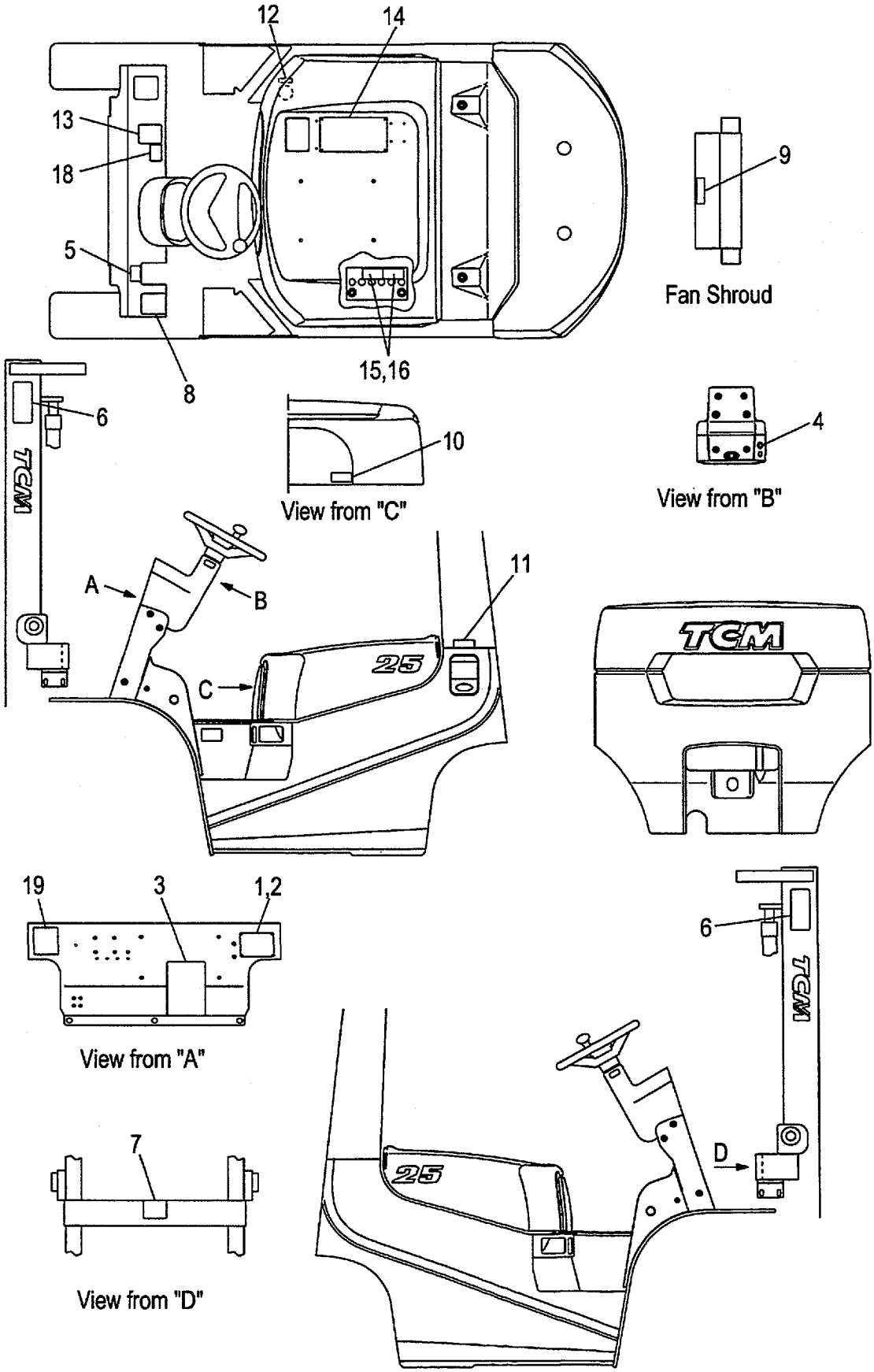

A:FG20C6H FG25C6H C:FD20C6H FD25C6H
B:FG20T6H FG25T6H D:FD20T6H FD25T6H

Item No	Part No.	Mark	Description	Req'd	Remarks : Serial No.
13	571A3-82361	*	DECAL,CAUTION デカル	1	[EXN]
14	516G3-82801	*	DECAL,CAUTION デカル	1	[EXN/ENGLISH]
-	516G3-82851		DECAL,CAUTION デカル	1	[EXN/DANISH]
-	516G3-82891		DECAL,CAUTION デカル	1	[EXN/SWEDISH]
-	516G3-82901		DECAL,CAUTION デカル	1	[EXN/FINISH]
15	534A3-82311		DECAL,BATTERY,A デカル	1	[EXN/ENGLISH]
-	534A3-82361		DECAL,BATTERY,A デカル	1	[EXN/DANISH]
-	534A3-82411		DECAL,BATTERY,A デカル	1	[EXN/SWEDISH]
-	534A3-82401		DECAL,BATTERY,A デカル	1	[EXN/FINISH]
16	534A3-82421		DECAL,BATTERY,B デカル	1	[EXN/ENGLISH]
-	534A3-82471		DECAL,BATTERY,B デカル	1	[EXN/DANISH]
-	534A3-82521		DECAL,BATTERY,B デカル	1	[EXN/SWEDISH]
-	534A3-82511		DECAL,BATTERY,B デカル	1	[EXN/FINISH]
17	55592-82001	+	DECAL,CERTIFICATE デカル	1	[EXN]
18	535H3-82411		DECAL,CREEP-CAUTION デカル	1	B,D [EXN/ENGLISH]
-	535H3-82461		DECAL,CREEP-CAUTION デカル	1	B,D [EXN/DANISH]
-	535H3-82511		DECAL,CREEP-CAUTION デカル	1	B,D [EXN/SWEDISH]
-	535H3-82501		DECAL,CREEP-CAUTION デカル	1	B,D [EXN/FINISH]
19	535E3-82241		DECAL,EC-SOUND デカル	1	C,D [EXN](NEW PART)
K1	236A9-19811		KIT,DECAL デカルキット	1	[EXN/ENGLISH] INC.3-9,13,14 & FIG.202:4-6

FIG.209 SERVICE TOOL [TO][EX]

(F5H29210) サービスツール

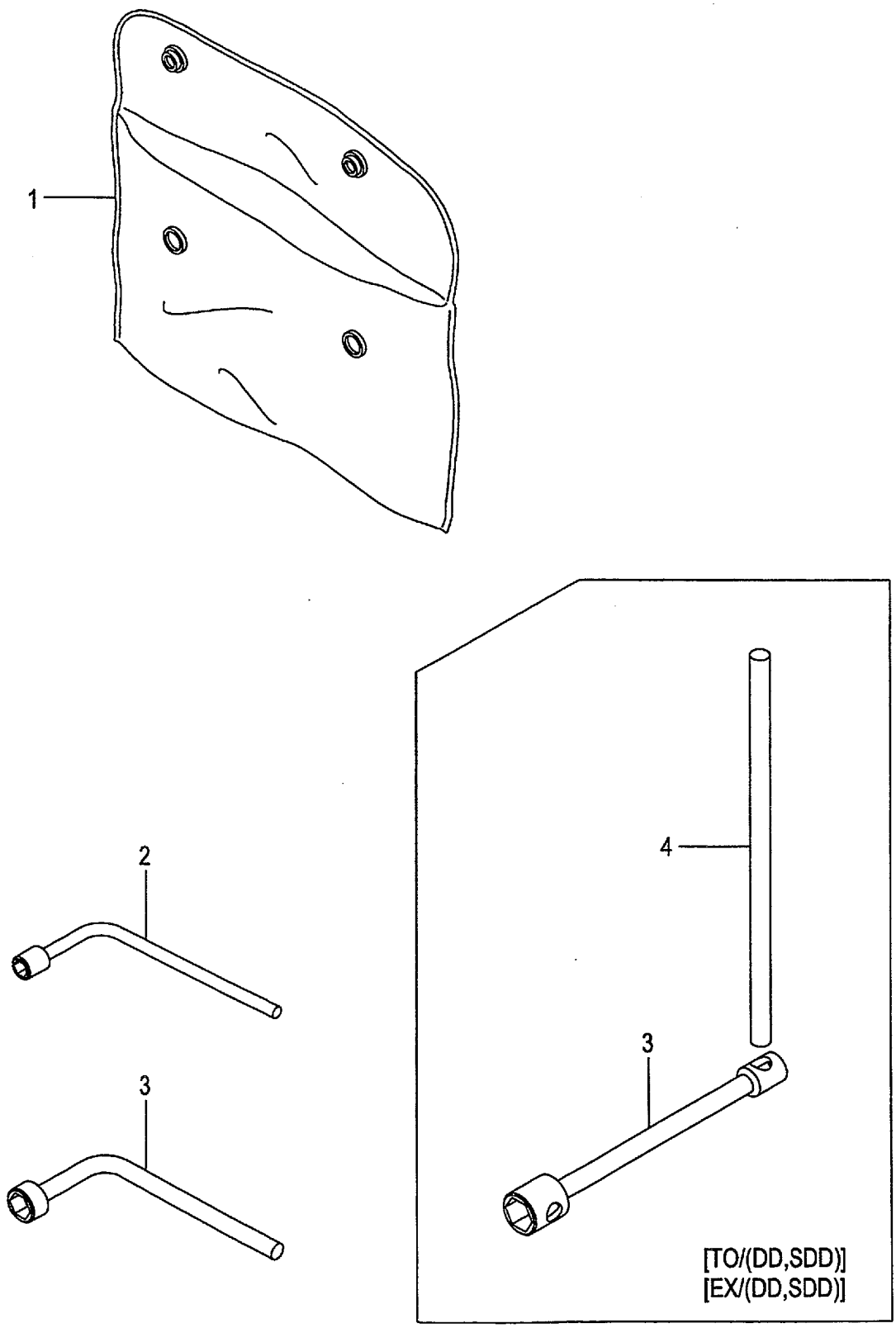

FIG.209
(F5H29210)

A:FG20C6H FG20T6H FG25C6H FG25T6H C:FD20C6H FD20T6H FD25C6H FD25T6H
B:FG20W6H FG25W6H D:FD20W6H FD25W6H

Item No	Part No.	Mark	Description	Req'd	Remarks : Serial No.
1	214A9-20101		SACK,SERVICE-TOOLS サック	1	[TO]
-	214A9-20101		SACK,SERVICE-TOOLS サック	1	A,C [EX]
2	22199-22251		WRENCH,HUB-NUT,21MM レンチ	1	[TO](REAR)
-	22199-22251		WRENCH,HUB-NUT,21MM レンチ	1	A,C [EX](REAR)
3	25599-22001		WRENCH,HUB-NUT,32MM レンチ	1	[TO](FRONT)
-	25599-22001		WRENCH,HUB-NUT,32MM レンチ	1	A,C [EX](FRONT)
-	23819-20011		WRENCH,HUB-NUT,41MM レンチ	1	[TO/DD][TO/SDD](FRONT)
-	23819-20011		WRENCH,HUB-NUT,41MM レンチ	1	A,C [EX/DD][EX/SDD](FRONT)
4	23819-20021		LEVER,WRENCH,HUB-NUT レバー	1	[TO/DD][TO/SDD]
-	23819-20021		LEVER,WRENCH,HUB-NUT レバー	1	A,C [EX/DD][EX/SDD]

FIG.210 FIRE EXTINGUISHER [FE][FE M]

(F5H293A0) ﾌｧｲﾔｲｸｽﾃｨﾝｸﾞｲｯｼｬ

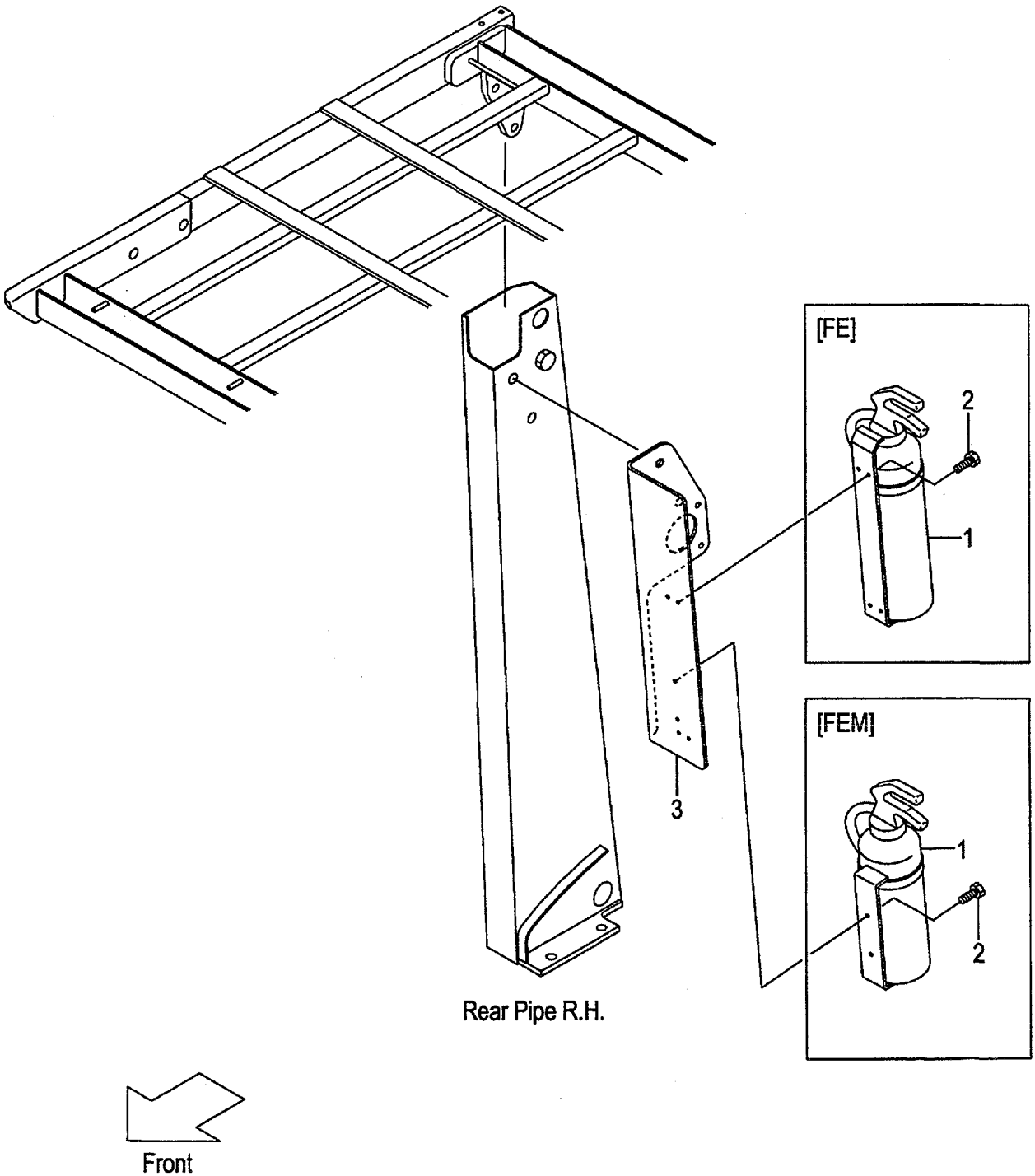

FIG.210
(F5H293A0)

A:FG20C6H FG20T6H FG25C6H FG25T6H FG20W6H FG25W6H
B:FD20C6H FD20T6H FD25C6H FD25T6H FD20W6H FD25W6H

Item No	Part No.	Mark	Description		Req'd	Remarks : Serial No.
1	22679-12102		EXTINGUISHER,FIRE	ｲｸｽﾃｨﾝｸﾞｲｯｼｬ	1	[FE]
-	271A9-12191		EXTINGUISHER,FIRE	ｲｸｽﾃｨﾝｸﾞｲｯｼｬ	1	[FE M]
2	01183-05012		BOLT	ﾎﾞﾙﾄ	4	[FE]
-	01183-05012		BOLT	ﾎﾞﾙﾄ	2	[FE M]
3	539A9-62001		BRACKET,EXTINGUISHER	ﾌﾞﾗｹｯﾄ	1	[FE][FE M]

FIG.211 FORK [VM39A]

(M5028110) フォーク

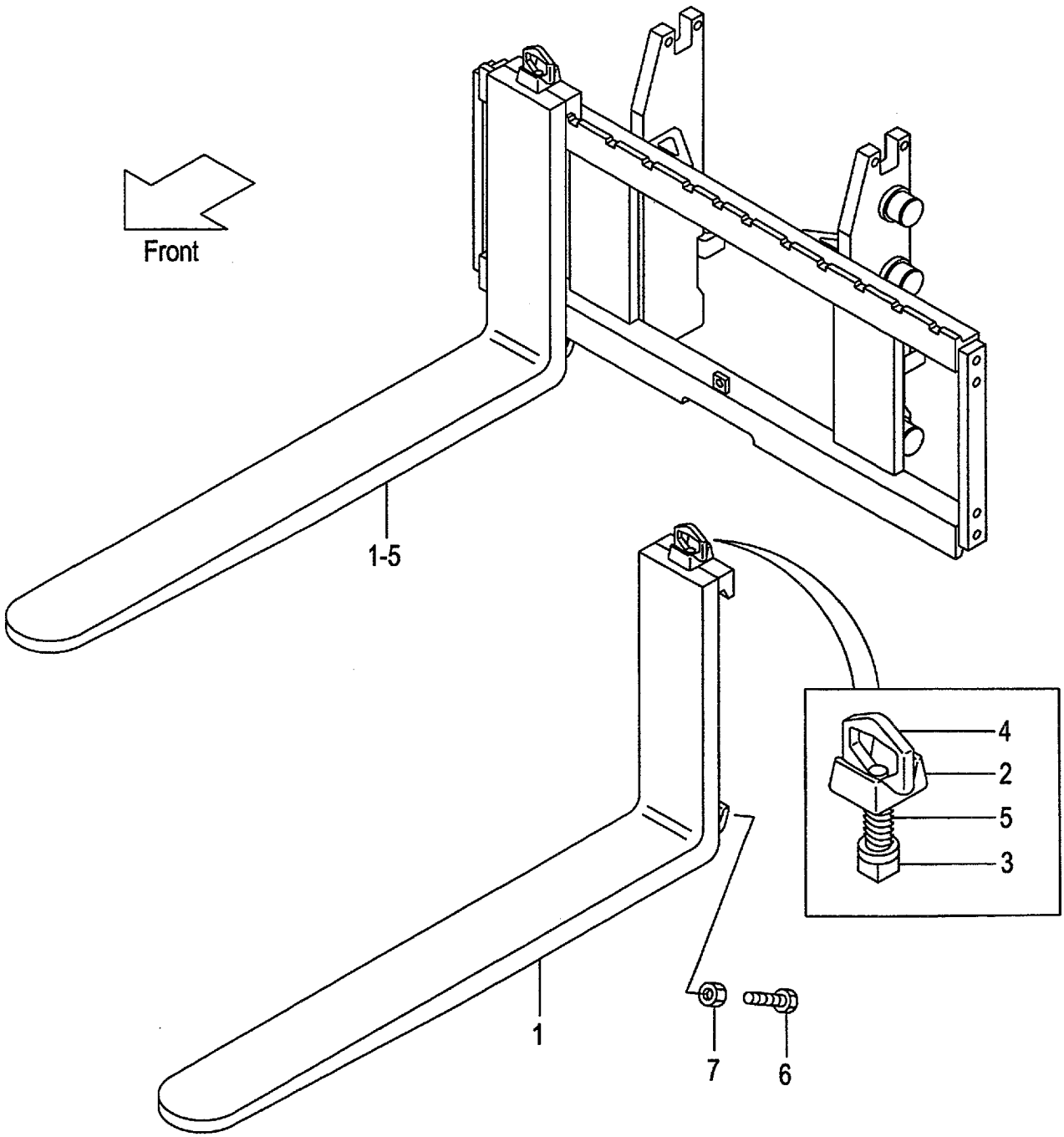

A:VM39A(2T)
B:VM39A(2.5T)

FIG.211
(M5028110)

Item No	Part No.	Mark	Description		Req'd	Remarks : Serial No.
1	231A8-10101		FORK	ﾌｫｰｸ	2	A (L=920) INC.2-5
-	214A8-10512		FORK	ﾌｫｰｸ	2	B (L=920) INC.2-5
-	231A8-10171		FORK	ﾌｫｰｸ	2	A [LF090] INC.2-5
-	231F8-10571		FORK	ﾌｫｰｸ	2	B [LF090] INC.2-5
-	231A8-10101		FORK	ﾌｫｰｸ	2	A [LF092] INC.2-5
-	231F8-10501		FORK	ﾌｫｰｸ	2	B [LF092] INC.2-5
-	214A8-10582		FORK	ﾌｫｰｸ	2	[LF100] INC.2-5
-	214A8-10512		FORK	ﾌｫｰｸ	2	[LF107][EX] INC.2-5
-	214A8-10592		FORK	ﾌｫｰｸ	2	[LF110] INC.2-5
-	214A8-10602		FORK	ﾌｫｰｸ	2	[LF120] INC.2-5
-	214A8-10522		FORK	ﾌｫｰｸ	2	[LF122] INC.2-5
-	214A8-10612		FORK	ﾌｫｰｸ	2	[LF130] INC.2-5
-	214A8-10532		FORK	ﾌｫｰｸ	2	[LF137] INC.2-5
-	214A8-10622		FORK	ﾌｫｰｸ	2	[LF140] INC.2-5
-	214A8-10632		FORK	ﾌｫｰｸ	2	[LF150] INC.2-5
-	214A8-10542		FORK	ﾌｫｰｸ	2	[LF152] INC.2-5
-	214A8-10642		FORK	ﾌｫｰｸ	2	[LF160] INC.2-5
-	214A8-10552		FORK	ﾌｫｰｸ	2	[LF167] INC.2-5
-	214A8-10653		FORK	ﾌｫｰｸ	2	[LF170] INC.2-5
-	214A8-10663		FORK	ﾌｫｰｸ	2	[LF180] INC.2-5
-	214A8-10563		FORK	ﾌｫｰｸ	2	[LF182] INC.2-5
-	214A8-10673		FORK	ﾌｫｰｸ	2	[LF190] INC.2-5
-	214A8-10683		FORK	ﾌｫｰｸ	2	[LF200] INC.2-5
-	234A8-10571		FORK	ﾌｫｰｸ	2	[LFD090] INC.2-5
-	234A8-10501		FORK	ﾌｫｰｸ	2	[LFD092] INC.2-5
-	234A8-10581		FORK	ﾌｫｰｸ	2	[LFD100] INC.2-5
-	234A8-10511		FORK	ﾌｫｰｸ	2	[LFD107] INC.2-5
-	234A8-10591		FORK	ﾌｫｰｸ	2	[LFD110] INC.2-5
-	234A8-10601		FORK	ﾌｫｰｸ	2	[LFD120] INC.2-5
-	234A8-10521		FORK	ﾌｫｰｸ	2	[LFD122] INC.2-5
-	234A8-10611		FORK	ﾌｫｰｸ	2	[LFD130] INC.2-5
-	234A8-10531		FORK	ﾌｫｰｸ	2	[LFD137] INC.2-5
-	234A8-10621		FORK	ﾌｫｰｸ	2	[LFD140] INC.2-5
-	234A8-10631		FORK	ﾌｫｰｸ	2	[LFD150] INC.2-5
-	234A8-10541		FORK	ﾌｫｰｸ	2	[LFD152] INC.2-5
-	234A8-10641		FORK	ﾌｫｰｸ	2	[LFD160] INC.2-5
-	234A8-10551		FORK	ﾌｫｰｸ	2	[LFD167] INC.2-5
-	234A8-10652		FORK	ﾌｫｰｸ	2	[LFD170] INC.2-5
-	234A8-10662		FORK	ﾌｫｰｸ	2	[LFD180] INC.2-5
-	234A8-10562		FORK	ﾌｫｰｸ	2	[LFD182] INC.2-5
-	234A8-10672		FORK	ﾌｫｰｸ	2	[LFD190] INC.2-5
-	234A8-10682		FORK	ﾌｫｰｸ	2	[LFD200] INC.2-5
A1	214A8-11001		STOPPER-ASSY,FORK	ｽﾄｯﾊﾟｱｯｾﾝ	2	INC.2-5
2	214A8-12001		HEAD	ﾍｯﾄﾞ	2	

FIG.211 FORK [VM39A]

(M5028110) フォーク

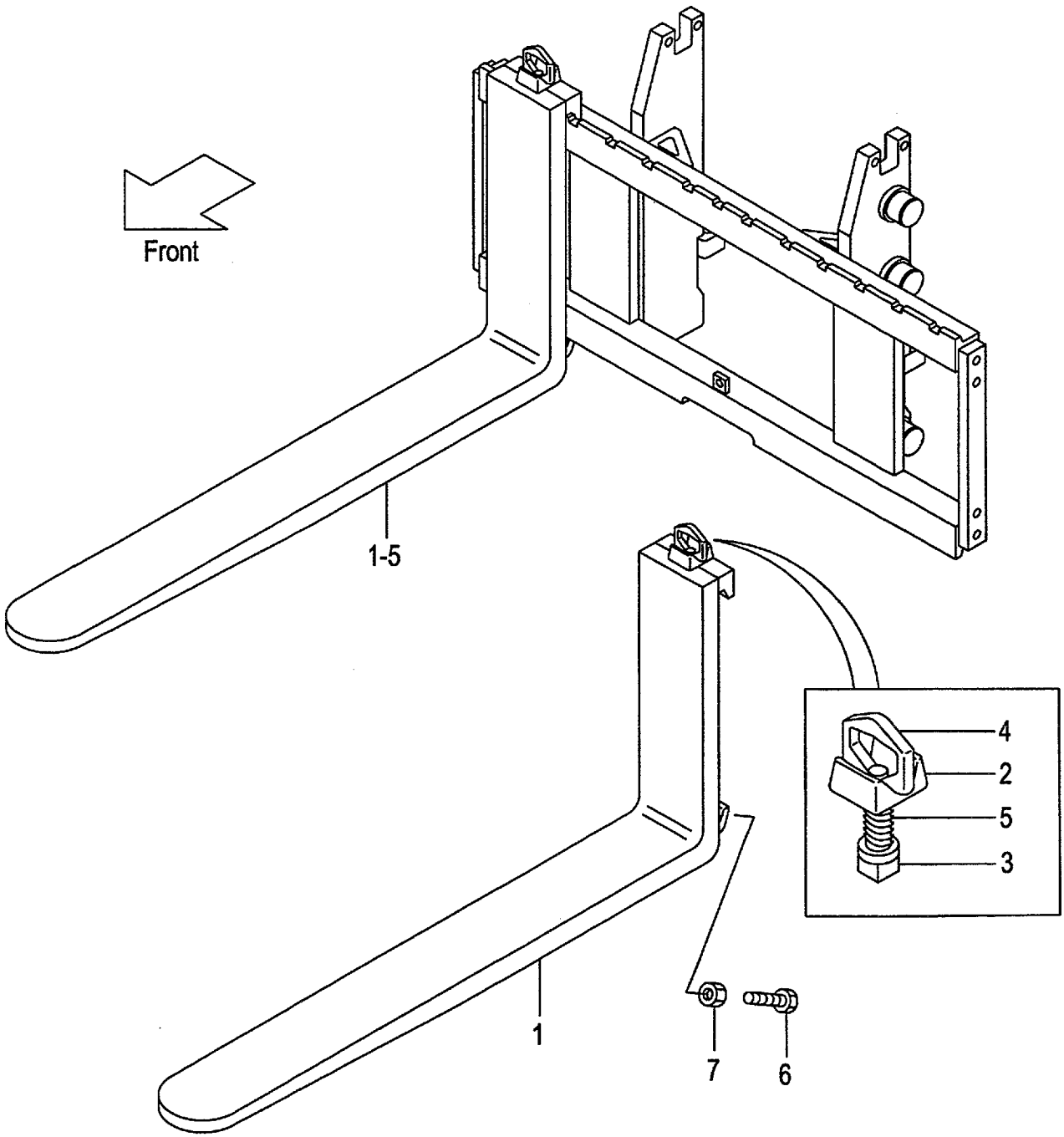

A:VM39A(2T)
B:VM39A(2.5T)

FIG.211
(M5028110)

Item No	Part No.	Mark	Description		Req'd	Remarks : Serial No.
3	214A8-12011		STOPPER	ｽﾄｯﾊﾟ	2	
4	214A8-12021		HANDLE	ﾊﾝﾄﾞﾙ	2	
5	214A8-12031		SPRING	ｽﾌﾟﾘﾝｸﾞ	2	
6	216G8-12101		BOLT	ﾎﾞﾙﾄ	4	[LFD]
7	01402-00010		WASHER	ﾜｯｼｬ	4	[LFD]

FIG.212 LIFT BRACKET [VM39A]

(M5028210) リフトブラケット

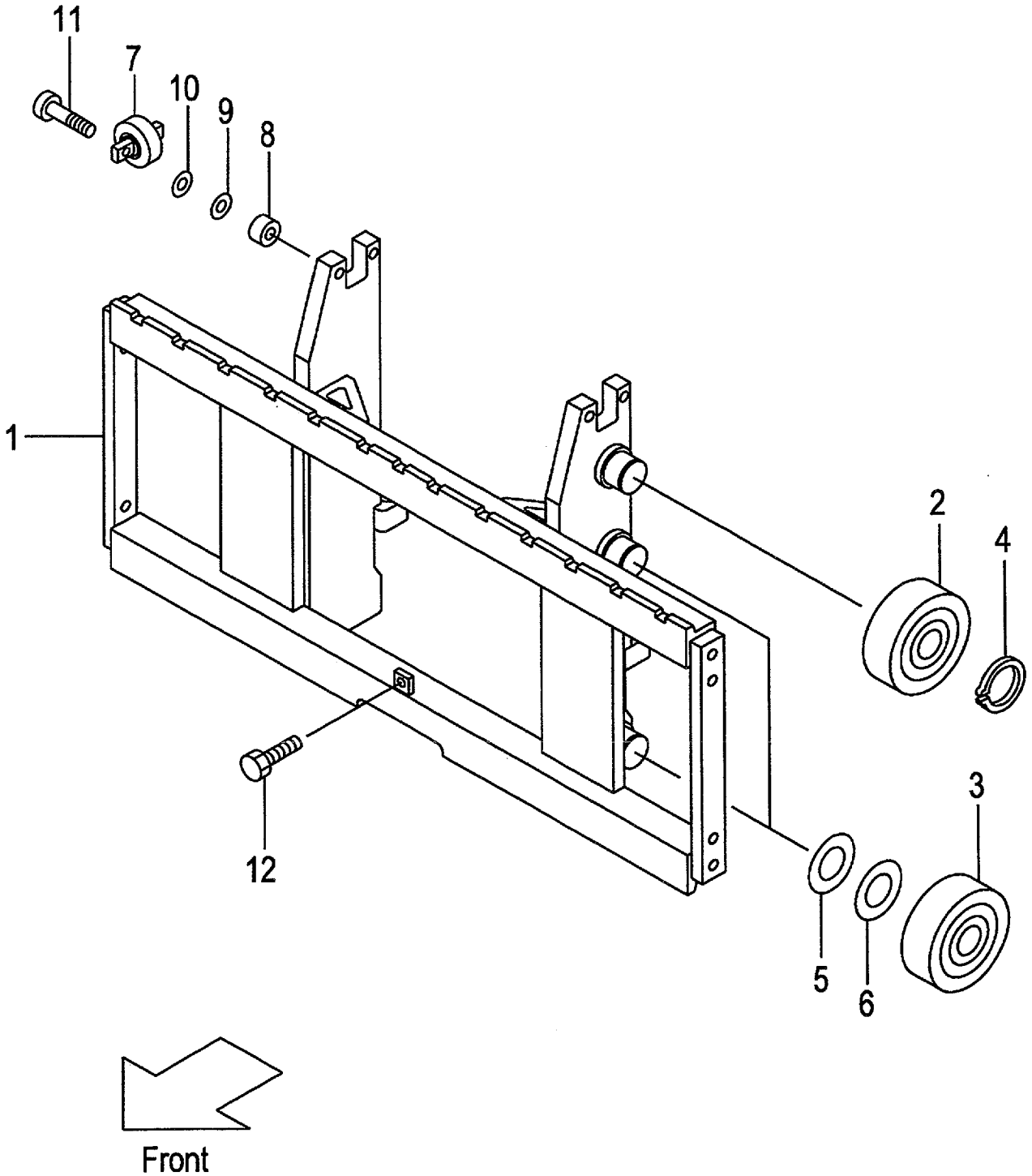

A:VM39A(2T)
B:VM39A(2.5T)

FIG.212
(M5028210)

Item No	Part No.	Mark	Description		Req'd	Remarks : Serial No.
1	239A8-20002		BRACKET,LIFT	ﾌﾞﾗｹｯﾄ	1	
2	277P8-22051		ROLLER,END	ﾛｰﾗ	2	
-	277P8-22061		ROLLER,END	ﾛｰﾗ	2	
-	577P3-74001		ROLLER,END	ﾛｰﾗ	2	[FC][CS35][FCS35][FCS45] [FCS55]
-	577P3-74011		ROLLER,END	ﾛｰﾗ	2	[FC][CS35][FCS35][FCS45] [FCS55]
3	277P8-22051		ROLLER,END	ﾛｰﾗ	4	
-	577P3-74001		ROLLER,END	ﾛｰﾗ	4	[FC][CS35][FCS35][FCS45] [FCS55]
-	277P8-22061		ROLLER,END	ﾛｰﾗ	(4)	
-	577P3-74011		ROLLER,END	ﾛｰﾗ	(4)	[FC][CS35][FCS35][FCS45] [FCS55]
4	02100-00045		RING,SNAP	ｽﾅｯﾌﾟﾘﾝｸﾞ	2	
5	277P8-22071		SHIM,T-0.5	ｼﾑ	5	
6	277P8-22081		SHIM,T-1.0	ｼﾑ	5	
7	23458-32052		ROLLER,SIDE	ﾛｰﾗ	2	
-	514A3-71701		ROLLER,SIDE	ﾛｰﾗ	2	[FC][CS35][FCS35][FCS45] [FCS55]
8	22548-34031		SPACER	ｽﾍﾟｰｻ	4	
9	22548-34051		SHIM,T-0.5	ｼﾑ	5	
10	22548-34061		SHIM,T-1.0	ｼﾑ	5	
11	01184-12050		BOLT & WASHER	ﾎﾞﾙﾄ&ﾜｯｼｬ	4	
-	01184-12040		BOLT & WASHER	ﾎﾞﾙﾄ&ﾜｯｼｬ	4	[FC][CS35][FCS35][FCS45] [FCS55]
12	01184-12025		BOLT	ﾎﾞﾙﾄ	1	

FIG.213 BACKREST [VM39A]

(M5028220) ﾊﾞｯｸﾚｽﾄ

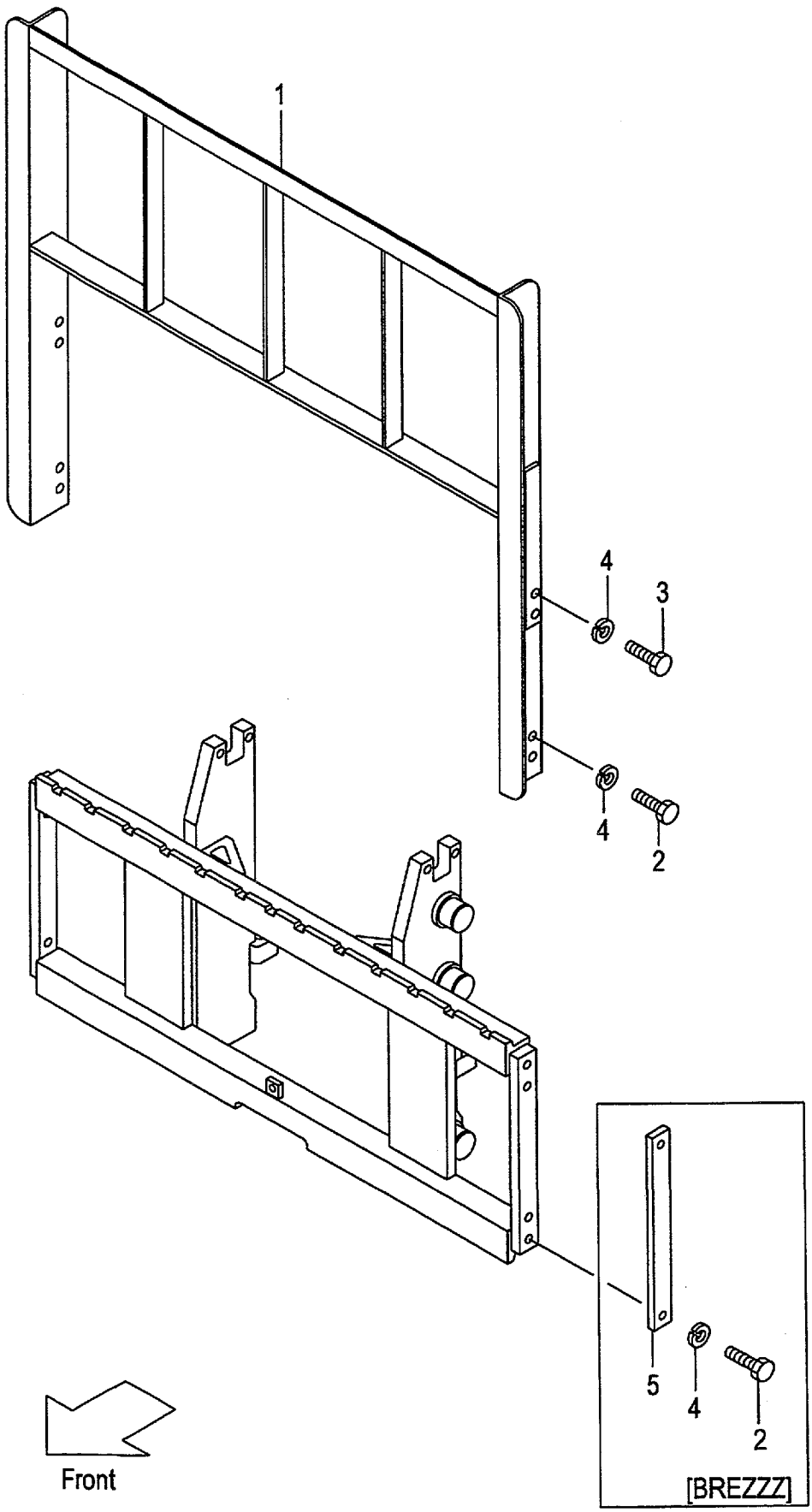

A:VM39A(2T)
B:VM39A(2.5T)

FIG.213
(M5028220)

Item No	Part No.	Mark	Description		Req'd	Remarks : Serial No.
1	234A8-22202		BACKREST	ﾊﾞｯｸﾚｽﾄ	1	
2	01100-14025		BOLT	ﾎﾞﾙﾄ	4	
-	01100-14025		BOLT	ﾎﾞﾙﾄ	4	[BREZZZ]
3	01100-14030		BOLT	ﾎﾞﾙﾄ	4	(WITHOUT BREZZZ)
4	02010-00014		WASHER	ﾜｯｼｬ	8	
-	02010-00014		WASHER	ﾜｯｼｬ	4	[BREZZZ]
5	23659-42161		PLATE,SIDE	ﾌﾟﾚｰﾄ	2	[BREZZZ]

FIG.214 MAST [VM39A]

(M5028310) マスト

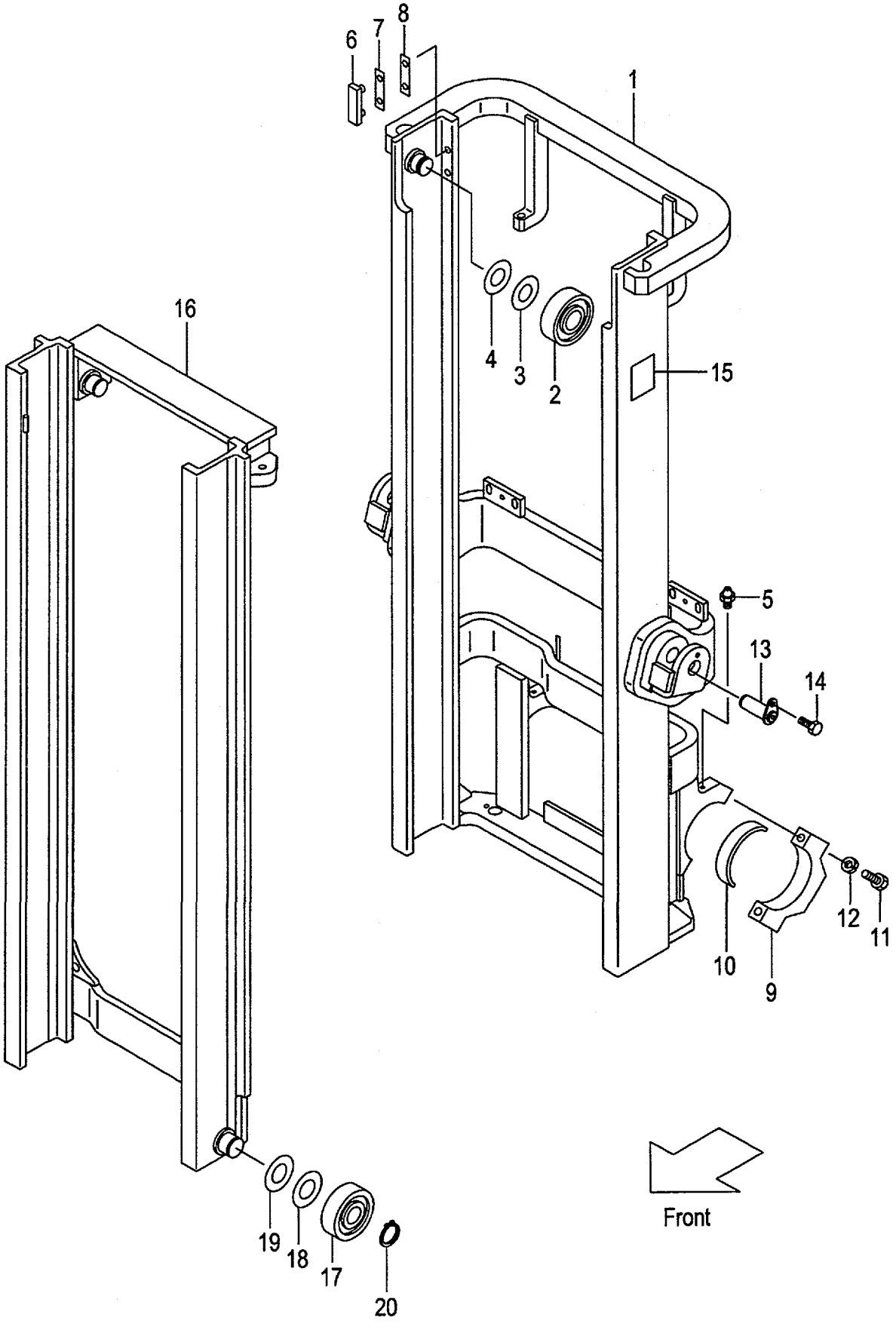

A:VM39A(2T)
B:VM39A(2.5T)

Item No	Part No.	Mark	Description		Req'd	Remarks : Serial No.
1	239A8-30012		MAST,OUTER VM200	アウタマスト	1	
-	239A8-30022		MAST,OUTER VM225	アウタマスト	1	
-	239A8-30032		MAST,OUTER VM250	アウタマスト	1	
-	239A8-30042		MAST,OUTER VM270	アウタマスト	1	
-	239A8-30052		MAST,OUTER VM275	アウタマスト	1	
-	239A8-30002		MAST,OUTER VM300	アウタマスト	1	
-	239A8-30062		MAST,OUTER VM325	アウタマスト	1	
-	239A8-30072		MAST,OUTER VM330	アウタマスト	1	
-	239A8-30082		MAST,OUTER VM350	アウタマスト	1	
-	239A8-30092		MAST,OUTER VM366	アウタマスト	1	
-	239A8-30102		MAST,OUTER VM370	アウタマスト	1	
-	239A8-30112		MAST,OUTER VM375	アウタマスト	1	
-	239A8-30122		MAST,OUTER VM400	アウタマスト	1	
-	239A8-30132		MAST,OUTER VM425	アウタマスト	1	
-	239A8-30142		MAST,OUTER VM450	アウタマスト	1	
-	239A8-30152		MAST,OUTER VM475	アウタマスト	1	
-	239A8-30162		MAST,OUTER VM500	アウタマスト	1	
-	239A8-30172		MAST,OUTER VM550	アウタマスト	1	
-	239A8-30182		MAST,OUTER VM600	アウタマスト	1	
2	277P8-22051		ROLLER,END	ローラ	2	
-	577P3-74001		ROLLER,END	ローラ	2	[FC][CS35][FCS35][FCS45] [FCS55]
3	277P8-22071		SHIM	シム	12	
4	277P8-22081		SHIM	シム	12	
5	04901-00100		FITTING	ﾌｨｯﾃｨﾝｸﾞ	2	
6	216G8-33401		SLIPPER	ｽﾘｯﾊﾟ	2	
7	216G8-33361		SHIM,T-0.5	シム	8	
8	216G8-33371		SHIM,T-1.0	シム	4	
9	22018-30065		CAP	ｷｬｯﾌﾟ	2	
10	214A8-02201		BUSHING	ﾌﾞｯｼﾝｸﾞ	2	
11	01103-16065		BOLT	ﾎﾞﾙﾄ	4	
12	02011-00016		WASHER	ﾜｯｼｬ	4	
13	272K8-52201		PIN	ﾋﾟﾝ	2	
14	216G8-52301		BOLT & WASHER	ﾎﾞﾙﾄ&ﾜｯｼｬ	2	
15	23678-06002		PLATE,NAME	ﾌﾟﾚｰﾄ	1	
16	239A8-30212		MAST,INNER VM200	インナマスト	1	
-	239A8-30222		MAST,INNER VM225	インナマスト	1	
-	239A8-30232		MAST,INNER VM250	インナマスト	1	
-	239A8-30242		MAST,INNER VM270	インナマスト	1	
-	239A8-30252		MAST,INNER VM275	インナマスト	1	
-	239A8-30202		MAST,INNER VM300	インナマスト	1	
-	239A8-30262		MAST,INNER VM325	インナマスト	1	
-	239A8-30272		MAST,INNER VM330	インナマスト	1	
-	239A8-30282		MAST,INNER VM350	インナマスト	1	
-	239A8-30292		MAST,INNER VM366	インナマスト	1	
-	239A8-30302		MAST,INNER VM370	インナマスト	1	
-	239A8-30312		MAST,INNER VM375	インナマスト	1	
-	239A8-30322		MAST,INNER VM400	インナマスト	1	
-	239A8-30332		MAST,INNER VM425	インナマスト	1	
-	239A8-30342		MAST,INNER VM450	インナマスト	1	

FIG.214 MAST [VM39A]

(M5028310) マスト

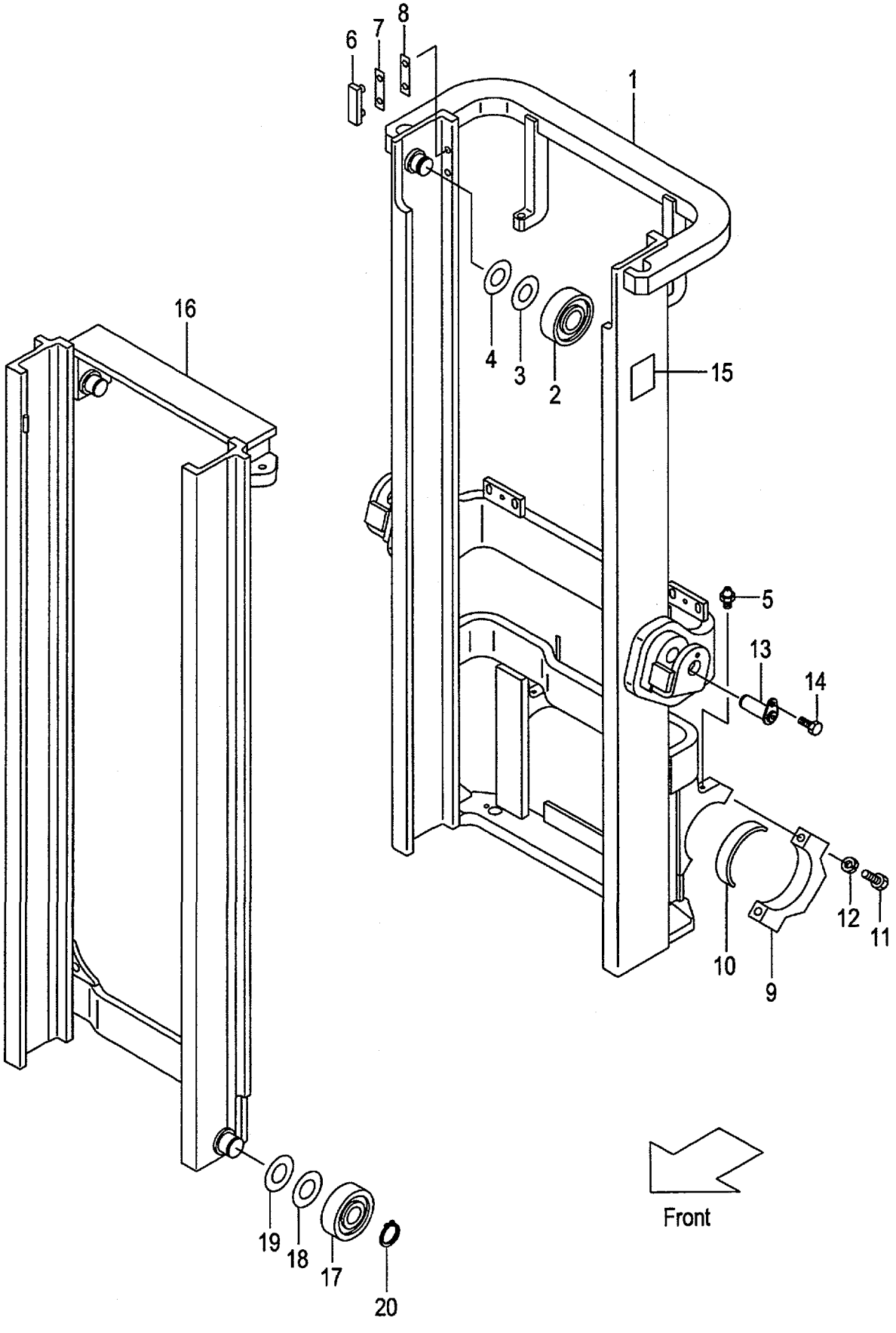

A:VM39A(2T)
B:VM39A(2.5T)

Item No	Part No.	Mark	Description	Req'd	Remarks : Serial No.
-	239A8-30352		MAST,INNER VM475 インナマスト	1	
-	239A8-30362		MAST,INNER VM500 インナマスト	1	
-	239A8-30372		MAST,INNER VM550 インナマスト	1	
-	239A8-30382		MAST,INNER VM600 インナマスト	1	
17	277P8-22051		ROLLER,END ローラ	2	
-	577P3-74001		ROLLER,END ローラ	2	[FC][CS35][FCS35][FCS45] [FCS55]
-	277P8-22061		ROLLER,END ローラ	(2)	
-	577P3-74011		ROLLER,END ローラ	(2)	[FC][CS35][FCS35][FCS45] [FCS55]
18	277P8-22071		SHIM,T-0.5 シム	12	
19	277P8-22081		SHIM,T-1.0 シム	12	
20	09192-30044		RING,SNAP スナップリング	2	

FIG.215 LIFT CYLINDER [VM39A]

(M5028410) リフトシリンダ

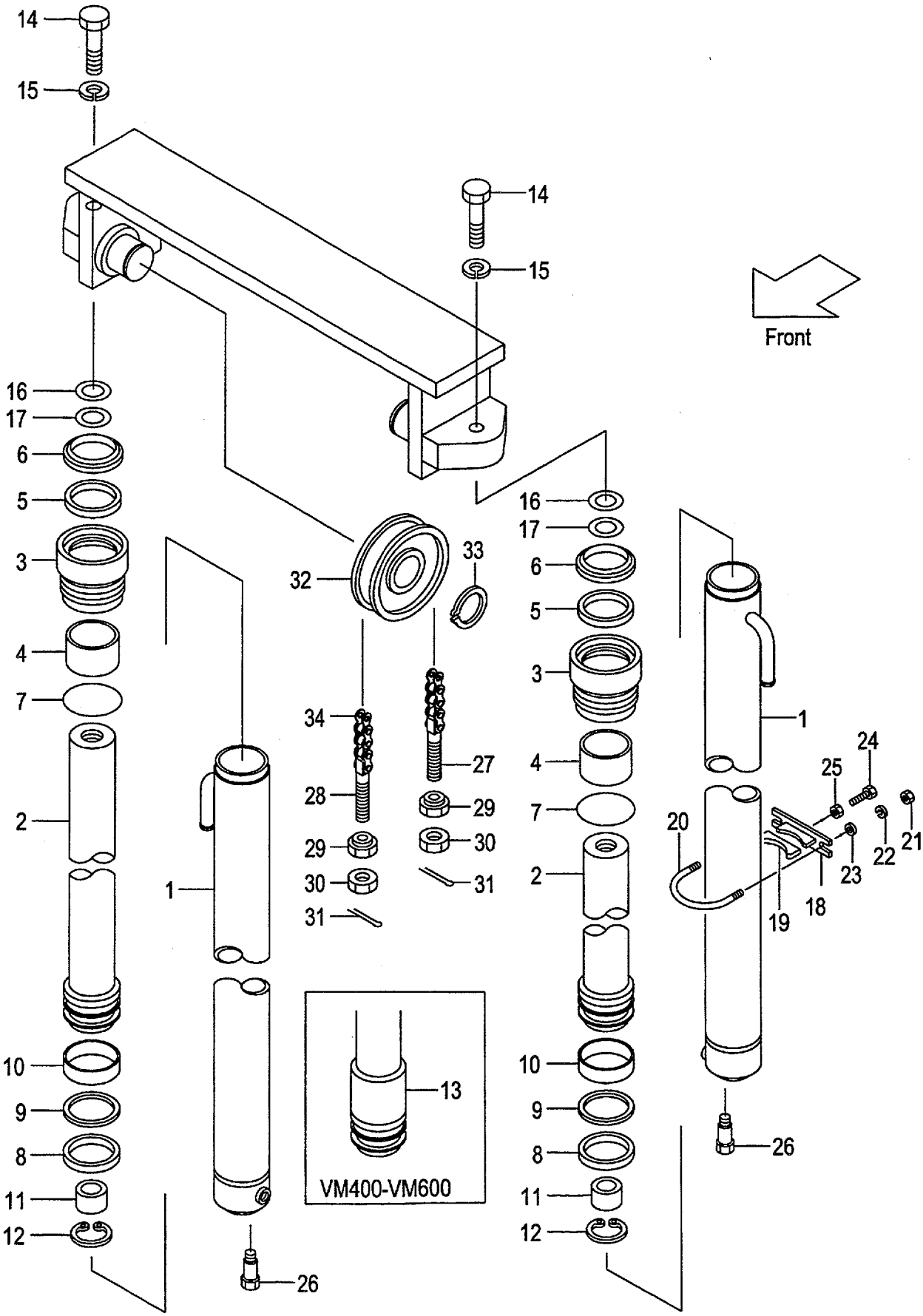

A:VM39A(2T)
B:VM39A(2.5T)

FIG.215
(M5028410)

Item No	Part No.	Mark	Description	Req'd	Remarks : Serial No.
A1	277P8-40011		CYL-ASSY,LIFT VM200 ﾘﾌﾄｼﾘﾝﾀﾞｱｯｾﾝ	2	INC.1-12
-	277P8-40021		CYL-ASSY,LIFT VM225 ﾘﾌﾄｼﾘﾝﾀﾞｱｯｾﾝ	2	INC.1-12
-	277P8-40031		CYL-ASSY,LIFT VM250 ﾘﾌﾄｼﾘﾝﾀﾞｱｯｾﾝ	2	INC.1-12
-	277P8-40041		CYL-ASSY,LIFT VM270 ﾘﾌﾄｼﾘﾝﾀﾞｱｯｾﾝ	2	INC.1-12
-	277P8-40051		CYL-ASSY,LIFT VM275 ﾘﾌﾄｼﾘﾝﾀﾞｱｯｾﾝ	2	INC.1-12
-	277P8-40001		CYL-ASSY,LIFT VM300 ﾘﾌﾄｼﾘﾝﾀﾞｱｯｾﾝ	2	INC.1-12
-	277P8-40061		CYL-ASSY,LIFT VM325 ﾘﾌﾄｼﾘﾝﾀﾞｱｯｾﾝ	2	INC.1-12
-	277P8-40071		CYL-ASSY,LIFT VM330 ﾘﾌﾄｼﾘﾝﾀﾞｱｯｾﾝ	2	INC.1-12
-	277P8-40081		CYL-ASSY,LIFT VM350 ﾘﾌﾄｼﾘﾝﾀﾞｱｯｾﾝ	2	INC.1-12
-	277P8-40091		CYL-ASSY,LIFT VM366 ﾘﾌﾄｼﾘﾝﾀﾞｱｯｾﾝ	2	INC.1-12
-	277P8-40101		CYL-ASSY,LIFT VM370 ﾘﾌﾄｼﾘﾝﾀﾞｱｯｾﾝ	2	INC.1-12
-	277P8-40111		CYL-ASSY,LIFT VM375 ﾘﾌﾄｼﾘﾝﾀﾞｱｯｾﾝ	2	INC.1-12
-	277P8-40121		CYL-ASSY,LIFT VM400 ﾘﾌﾄｼﾘﾝﾀﾞｱｯｾﾝ	2	INC.1-13
-	277P8-40131		CYL-ASSY,LIFT VM425 ﾘﾌﾄｼﾘﾝﾀﾞｱｯｾﾝ	2	INC.1-13
-	277P8-40141		CYL-ASSY,LIFT VM450 ﾘﾌﾄｼﾘﾝﾀﾞｱｯｾﾝ	2	INC.1-13
-	277P8-40151		CYL-ASSY,LIFT VM475 ﾘﾌﾄｼﾘﾝﾀﾞｱｯｾﾝ	2	INC.1-13
-	277P8-40161		CYL-ASSY,LIFT VM500 ﾘﾌﾄｼﾘﾝﾀﾞｱｯｾﾝ	2	INC.1-13
-	277P8-40171		CYL-ASSY,LIFT VM550 ﾘﾌﾄｼﾘﾝﾀﾞｱｯｾﾝ	2	INC.1-13
-	277P8-40181		CYL-ASSY,LIFT VM600 ﾘﾌﾄｼﾘﾝﾀﾞｱｯｾﾝ	2	INC.1-13
1	B-30697-51101		BODY,CYL VM200 ﾎﾞﾃﾞｨ	2	
-	B-30697-51201		BODY,CYL VM225 ﾎﾞﾃﾞｨ	2	
-	B-30697-51301		BODY,CYL VM250 ﾎﾞﾃﾞｨ	2	
-	B-30697-51401		BODY,CYL VM270 ﾎﾞﾃﾞｨ	2	
-	B-30697-51501		BODY,CYL VM275 ﾎﾞﾃﾞｨ	2	
-	B-30697-51601		BODY,CYL VM300 ﾎﾞﾃﾞｨ	2	
-	B-30697-51701		BODY,CYL VM325 ﾎﾞﾃﾞｨ	2	
-	B-30697-51801		BODY,CYL VM330 ﾎﾞﾃﾞｨ	2	
-	B-30697-51901		BODY,CYL VM350 ﾎﾞﾃﾞｨ	2	
-	B-30697-52001		BODY,CYL VM366 ﾎﾞﾃﾞｨ	2	
-	B-30697-52101		BODY,CYL VM370 ﾎﾞﾃﾞｨ	2	
-	B-30697-52201		BODY,CYL VM375 ﾎﾞﾃﾞｨ	2	
-	B-30697-52301		BODY,CYL VM400 ﾎﾞﾃﾞｨ	2	
-	B-30697-52401		BODY,CYL VM425 ﾎﾞﾃﾞｨ	2	
-	B-30697-52501		BODY,CYL VM450 ﾎﾞﾃﾞｨ	2	
-	B-30697-52601		BODY,CYL VM475 ﾎﾞﾃﾞｨ	2	
-	B-30697-52701		BODY,CYL VM500 ﾎﾞﾃﾞｨ	2	
-	B-30697-52801		BODY,CYL VM550 ﾎﾞﾃﾞｨ	2	
-	B-30697-52901		BODY,CYL VM600 ﾎﾞﾃﾞｨ	2	
2	B-30697-51102		ROD,PISTON VM200 ﾛｯﾄﾞ	2	
-	B-30697-51202		ROD,PISTON VM225 ﾛｯﾄﾞ	2	
-	B-30697-51302		ROD,PISTON VM250 ﾛｯﾄﾞ	2	
-	B-30697-51402		ROD,PISTON VM270 ﾛｯﾄﾞ	2	
-	B-30697-51502		ROD,PISTON VM275 ﾛｯﾄﾞ	2	
-	B-30697-51602		ROD,PISTON VM300 ﾛｯﾄﾞ	2	
-	B-30697-51702		ROD,PISTON VM325 ﾛｯﾄﾞ	2	
-	B-30697-51802		ROD,PISTON VM330 ﾛｯﾄﾞ	2	
-	B-30697-51902		ROD,PISTON VM350 ﾛｯﾄﾞ	2	
-	B-30697-52002		ROD,PISTON VM366 ﾛｯﾄﾞ	2	
-	B-30697-52102		ROD,PISTON VM370 ﾛｯﾄﾞ	2	
-	B-30697-52202		ROD,PISTON VM375 ﾛｯﾄﾞ	2	

FIG.215 LIFT CYLINDER [VM39A]

(M5028410) リフトシリンダ

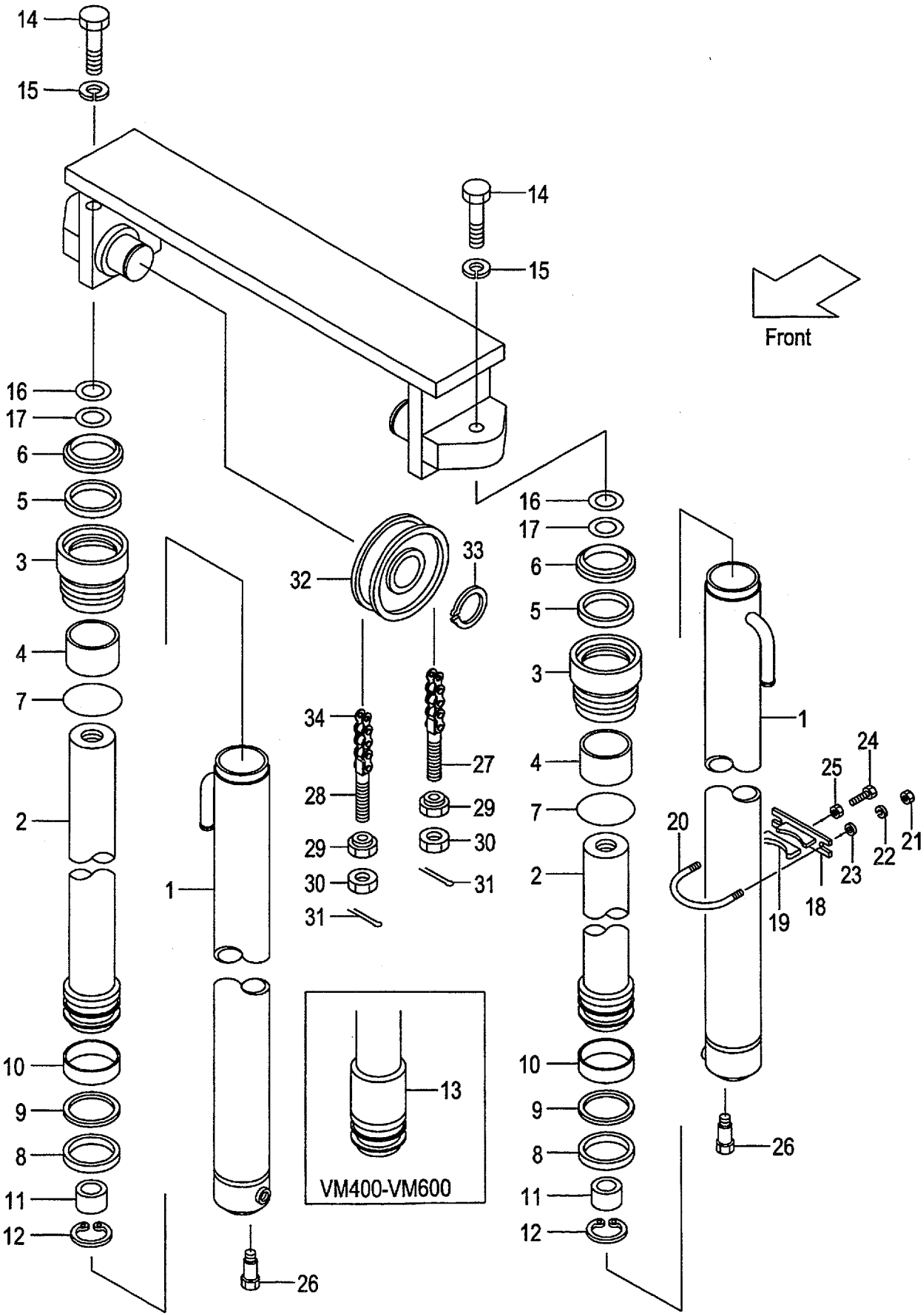

A:VM39A(2T)
B:VM39A(2.5T)

FIG.215
(M5028410)

Item No	Part No.	Mark	Description		Req'd	Remarks : Serial No.
-	B-30697-52302		ROD,PISTON VM400	ﾛｯﾄﾞ	2	
-	B-30697-52402		ROD,PISTON VM425	ﾛｯﾄﾞ	2	
-	B-30697-52502		ROD,PISTON VM450	ﾛｯﾄﾞ	2	
-	B-30697-52602		ROD,PISTON VM475	ﾛｯﾄﾞ	2	
-	B-30697-52702		ROD,PISTON VM500	ﾛｯﾄﾞ	2	
-	B-30697-52802		ROD,PISTON VM550	ﾛｯﾄﾞ	2	
-	B-30697-52902		ROD,PISTON VM600	ﾛｯﾄﾞ	2	
3	B-30121-50102	*	CAP	ｷｬｯﾌﾟ	2	
4	B-30131-40017	*	BUSHING	ﾌﾞｯｼﾝｸﾞ	2	
5	B-30961-04012	*	U-RING	Uﾘﾝｸﾞ	2	
6	B-30191-40025	*	RING,WIPER	ﾘﾝｸﾞ	2	
7	B-30161-91774	*	O-RING	Oﾘﾝｸﾞ	2	
8	B-30161-50046	*	U-RING	Uﾘﾝｸﾞ	2	
9	B-30461-50039	*	RING,BACK-UP	ﾘﾝｸﾞ	2	
10	B-30131-50018		BUSHING	ﾌﾞｯｼﾝｸﾞ	2	
11	B-30551-91003		RING	ﾘﾝｸﾞ	2	
12	B-30141-91049		RING,SNAP	ｽﾅｯﾌﾟﾘﾝｸﾞ	2	
13	B-30286-95303		SPACER VM400	ｽﾍﾟｰｻ	2	
-	B-30286-95303		SPACER VM425	ｽﾍﾟｰｻ	2	
-	B-30286-95303		SPACER VM450	ｽﾍﾟｰｻ	2	
-	B-30286-95303		SPACER VM475	ｽﾍﾟｰｻ	2	
-	B-30286-95303		SPACER VM500	ｽﾍﾟｰｻ	2	
-	B-30296-11903		SPACER VM550	ｽﾍﾟｰｻ	2	
-	B-30296-11903		SPACER VM600	ｽﾍﾟｰｻ	2	
14	01103-14040		BOLT	ﾎﾞﾙﾄ	2	
15	02011-00014		WASHER	ﾜｯｼｬ	2	
16	22517-40051		SHIM,T-0.2	ｼﾑ	4	
17	22717-40081		SHIM,T-0.5	ｼﾑ	4	
A2	215E8-42171		SUPPORT-ASSY	ｻﾎﾟｰﾄｱｯｾﾝ	2	[VM200-375] INC.18,19
-	215E8-42171		SUPPORT-ASSY	ｻﾎﾟｰﾄｱｯｾﾝ	4	[VM400-600] INC.18,19
18	215E8-42181		SUPPORT	ｻﾎﾟｰﾄ	2	[VM200-375]
-	215E8-42181		SUPPORT	ｻﾎﾟｰﾄ	4	[VM400-600]
19	24868-42111		RUBBER	ﾗﾊﾞｰ	2	[VM200-375]
-	24868-42111		RUBBER	ﾗﾊﾞｰ	4	[VM400-600]
20	234A8-42551		U-BOLT	Uﾎﾞﾙﾄ	2	[VM200-375]
-	234A8-42551		U-BOLT	Uﾎﾞﾙﾄ	4	[VM400-600]
21	234A8-42561		NUT	ﾅｯﾄ	4	[VM200-375]
-	234A8-42561		NUT	ﾅｯﾄ	8	[VM400-600]
22	02010-20010		WASHER	ﾜｯｼｬ	4	[VM200-375]
-	02010-20010		WASHER	ﾜｯｼｬ	8	[VM400-600]
23	02000-20010		WASHER	ﾜｯｼｬ	4	[VM200-375]
-	02000-20010		WASHER	ﾜｯｼｬ	8	[VM400-600]
24	232A8-42201		BOLT	ﾎﾞﾙﾄ	2	[VM200-375]
-	232A8-42201		BOLT	ﾎﾞﾙﾄ	4	[VM400-600]
25	234A8-42571		NUT	ﾅｯﾄ	2	[VM200-375]
-	234A8-42571		NUT	ﾅｯﾄ	4	[VM400-600]
26	214A8-42661		BOLT	ﾎﾞﾙﾄ	2	
27	23500-82001		PIN,ANCHOR	ﾋﾟﾝ	2	
-	23658-42531		PIN,ANCHOR	ﾋﾟﾝ	2	[FC][FCS35][FCS45][FCS55]
28	52672-72231		PIN,ANCHOR	ﾋﾟﾝ	2	

FIG.215 LIFT CYLINDER [VM39A]

(M5028410) リフトシリンダ

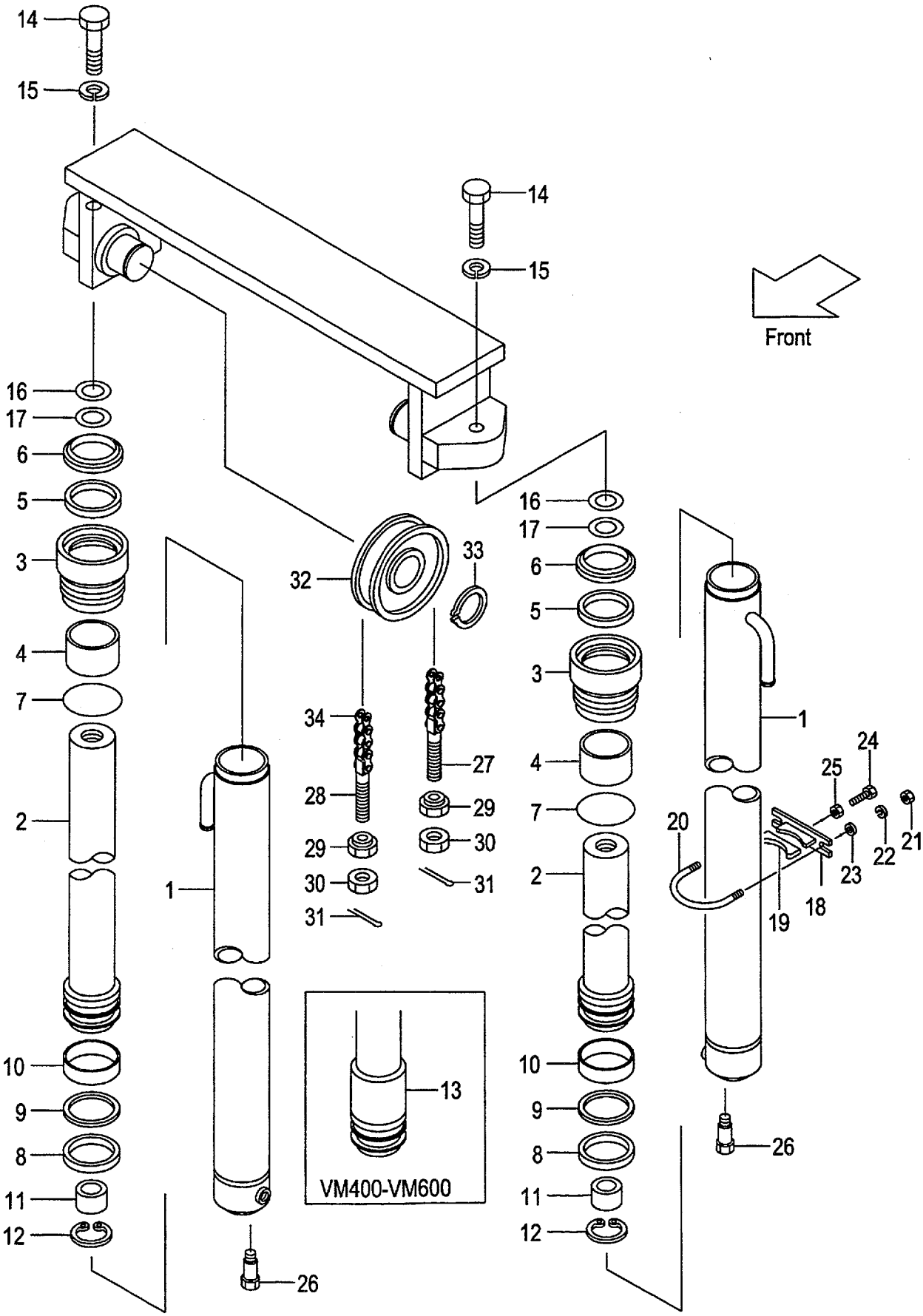

A:VM39A(2T)
B:VM39A(2.5T)

FIG.215
(M5028410)

Item No	Part No.	Mark	Description		Req'd	Remarks : Serial No.
-	22218-42111		PIN,ANCHOR	ﾋﾟﾝ	2	[FC][FCS35][FCS45][FCS55]
29	22218-40191		NUT	ﾅｯﾄ	4	
30	01400-00018		NUT	ﾅｯﾄ	4	
31	02200-03030		PIN	ﾋﾟﾝ	4	
32	234A8-43501		SHEAVE	ｼｰﾌﾞ	2	
-	22208-40031		SHEAVE	ｼｰﾌﾞ	2	[FC][FCS35][FCS45][FCS55]
33	02100-00040		RING,SNAP	ｽﾅｯﾌﾟﾘﾝｸﾞ	2	
34	22679-45711		CHAIN,LEAF VM200	ﾁｪｰﾝ	2	
-	22679-45771		CHAIN,LEAF VM225	ﾁｪｰﾝ	2	
-	22679-45831		CHAIN,LEAF VM250	ﾁｪｰﾝ	2	
-	22679-45891		CHAIN,LEAF VM270	ﾁｪｰﾝ	2	
-	22679-45911		CHAIN,LEAF VM275	ﾁｪｰﾝ	2	
-	22679-45971		CHAIN,LEAF VM300	ﾁｪｰﾝ	2	
-	22679-46031		CHAIN,LEAF VM325	ﾁｪｰﾝ	2	
-	22679-46051		CHAIN,LEAF VM330	ﾁｪｰﾝ	2	
-	22679-46091		CHAIN,LEAF VM350	ﾁｪｰﾝ	2	
-	22679-46151		CHAIN,LEAF VM366	ﾁｪｰﾝ	2	
-	22679-46151		CHAIN,LEAF VM370	ﾁｪｰﾝ	2	
-	22679-46171		CHAIN,LEAF VM375	ﾁｪｰﾝ	2	
-	22679-46251		CHAIN,LEAF VM400	ﾁｪｰﾝ	2	
-	22679-46331		CHAIN,LEAF VM425	ﾁｪｰﾝ	2	
-	22679-46391		CHAIN,LEAF VM450	ﾁｪｰﾝ	2	
-	22679-46451		CHAIN,LEAF VM475	ﾁｪｰﾝ	2	
-	22679-46511		CHAIN,LEAF VM500	ﾁｪｰﾝ	2	
-	22679-46671		CHAIN,LEAF VM550	ﾁｪｰﾝ	2	
-	22679-46811		CHAIN,LEAF VM600	ﾁｪｰﾝ	2	
-	09001-10043		CHAIN,ROLLER VM200	ﾁｪｰﾝ	2	[FC][FCS35][FCS45][FCS55]
-	09001-10047		CHAIN,ROLLER VM225	ﾁｪｰﾝ	2	[FC][FCS35][FCS45][FCS55]
-	09001-10051		CHAIN,ROLLER VM250	ﾁｪｰﾝ	2	[FC][FCS35][FCS45][FCS55]
-	09001-10053		CHAIN,ROLLER VM270	ﾁｪｰﾝ	2	[FC][FCS35][FCS45][FCS55]
-	09001-10055		CHAIN,ROLLER VM275	ﾁｪｰﾝ	2	[FC][FCS35][FCS45][FCS55]
-	09001-10059		CHAIN,ROLLER VM300	ﾁｪｰﾝ	2	[FC][FCS35][FCS45][FCS55]
-	09001-10063		CHAIN,ROLLER VM325	ﾁｪｰﾝ	2	[FC][FCS35][FCS45][FCS55]
-	09001-10063		CHAIN,ROLLER VM330	ﾁｪｰﾝ	2	[FC][FCS35][FCS45][FCS55]
-	09001-10067		CHAIN,ROLLER VM350	ﾁｪｰﾝ	2	[FC][FCS35][FCS45][FCS55]
-	09001-10069		CHAIN,ROLLER VM366	ﾁｪｰﾝ	2	[FC][FCS35][FCS45][FCS55]
-	09001-10069		CHAIN,ROLLER VM370	ﾁｪｰﾝ	2	[FC][FCS35][FCS45][FCS55]
-	09001-10071		CHAIN,ROLLER VM375	ﾁｪｰﾝ	2	[FC][FCS35][FCS45][FCS55]
-	09001-10075		CHAIN,ROLLER VM400	ﾁｪｰﾝ	2	[FC][FCS35][FCS45][FCS55]
-	09001-10079		CHAIN,ROLLER VM425	ﾁｪｰﾝ	2	[FC][FCS35][FCS45][FCS55]
-	09001-10083		CHAIN,ROLLER VM450	ﾁｪｰﾝ	2	[FC][FCS35][FCS45][FCS55]
-	09001-10087		CHAIN,ROLLER VM475	ﾁｪｰﾝ	2	[FC][FCS35][FCS45][FCS55]
-	09001-10091		CHAIN,ROLLER VM500	ﾁｪｰﾝ	2	[FC][FCS35][FCS45][FCS55]
-	09001-10101		CHAIN,ROLLER VM550	ﾁｪｰﾝ	2	[FC][FCS35][FCS45][FCS55]
-	09001-10109		CHAIN,ROLLER VM600	ﾁｪｰﾝ	2	[FC][FCS35][FCS45][FCS55]
K1	B-3050B-00119		KIT,CAP	ｷｬｯﾌﾟｷｯﾄ	2	INC.3,4
K2	B-3050A-00093		KIT,REPAIR	ﾘﾍﾟｱｷｯﾄ	2	INC.5-9

FIG.216 MAST PIPING [VM39A]

(M5028420) マストパイピング

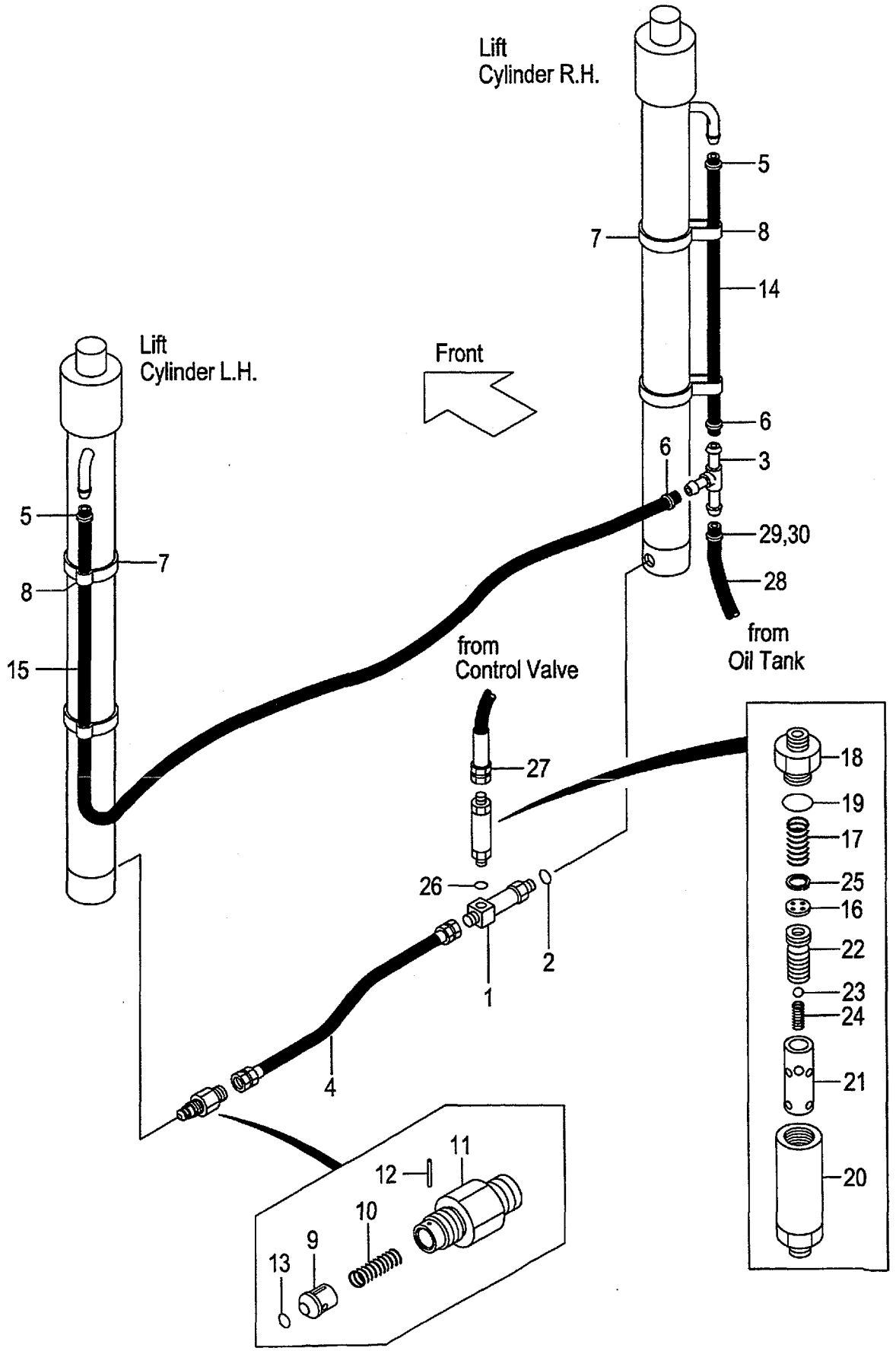

A:VM39A(2T)
B:VM39A(2.5T)

FIG.216
(M5028420)

Item No	Part No.	Mark	Description		Req'd	Remarks : Serial No.
A1	234A8-41101		THREE-WAY-ASSY	ｽﾘｰｳｪｲｱｯｾﾝ	1	INC.1,2
1	NO PART NO.	#	THREE-WAY	ｽﾘｰｳｴｲ	1	
2	03320-00140		O-RING	Oﾘﾝｸﾞ	1	
3	23679-45051		THREE-WAY	ｽﾘｰｳｴｲ	1	
-	53675-55051		THREE-WAY	ｽﾘｰｳｴｲ	1	[FC][RTL]
4	234A8-02201		HOSE	ﾎｰｽ	1	
5	04911-00018		CLIP	ｸﾘｯﾌﾟ	2	
-	24329-46201		CLIP	ｸﾘｯﾌﾟ	2	[FC][RTL]
6	04911-00018		CLIP	ｸﾘｯﾌﾟ	2	
-	04911-00021		CLIP	ｸﾘｯﾌﾟ	2	[FC][RTL]
7	04913-21380		BAND	ﾊﾞﾝﾄﾞ	4	
8	23678-42401		BAND	ﾊﾞﾝﾄﾞ	4	
-	53675-54101		BAND	ﾊﾞﾝﾄﾞ	4	[FC][RTL]
A2	234A8-40701		VALVE-ASSY,CUT	ｶｯﾄﾊﾞﾙﾌﾞｱｯｾﾝ	1	INC.9-13
9	234A8-42602		PISTON	ﾋﾟｽﾄﾝ	1	
10	234A8-42611		SPRING	ｽﾌﾟﾘﾝｸﾞ	1	
11	234A8-42622		NIPPLE	ﾆｯﾌﾟﾙ	1	
12	02270-01014		PIN	ﾋﾟﾝ	1	
13	03320-00140		O-RING	Oﾘﾝｸﾞ	1	
14	23678-40060		HOSE,RH VM200	ﾎｰｽ	1	
-	23678-40070		HOSE,RH VM225	ﾎｰｽ	1	
-	23678-40085		HOSE,RH VM250	ﾎｰｽ	1	
-	23678-40095		HOSE,RH VM270	ﾎｰｽ	1	
-	23678-40095		HOSE,RH VM275	ﾎｰｽ	1	
-	23678-40110		HOSE,RH VM300	ﾎｰｽ	1	
-	23678-40120		HOSE,RH VM325	ﾎｰｽ	1	
-	23678-40125		HOSE,RH VM330	ﾎｰｽ	1	
-	23678-40135		HOSE,RH VM350	ﾎｰｽ	1	
-	23678-40145		HOSE,RH VM366	ﾎｰｽ	1	
-	23678-40145		HOSE,RH VM370	ﾎｰｽ	1	
-	23678-40145		HOSE,RH VM375	ﾎｰｽ	1	
-	23678-40165		HOSE,RH VM400	ﾎｰｽ	1	
-	23678-40175		HOSE,RH VM425	ﾎｰｽ	1	
-	23678-40190		HOSE,RH VM450	ﾎｰｽ	1	
-	23678-40200		HOSE,RH VM475	ﾎｰｽ	1	
-	23678-40215		HOSE,RH VM500	ﾎｰｽ	1	
-	23678-40245		HOSE,RH VM550	ﾎｰｽ	1	
-	23678-40270		HOSE,RH VM600	ﾎｰｽ	1	
-	04710-04060		HOSE,RH VM200	ﾎｰｽ	1	[FC][RTL]
-	04710-04070		HOSE,RH VM225	ﾎｰｽ	1	[FC][RTL]
-	04710-04085		HOSE,RH VM250	ﾎｰｽ	1	[FC][RTL]
-	04710-04095		HOSE,RH VM270	ﾎｰｽ	1	[FC][RTL]
-	04710-04095		HOSE,RH VM275	ﾎｰｽ	1	[FC][RTL]
-	04710-04110		HOSE,RH VM300	ﾎｰｽ	1	[FC][RTL]
-	04710-04120		HOSE,RH VM325	ﾎｰｽ	1	[FC][RTL]
-	04710-04125		HOSE,RH VM330	ﾎｰｽ	1	[FC][RTL]
-	04710-04135		HOSE,RH VM350	ﾎｰｽ	1	[FC][RTL]
-	04710-04145		HOSE,RH VM366	ﾎｰｽ	1	[FC][RTL]
-	04710-04145		HOSE,RH VM370	ﾎｰｽ	1	[FC][RTL]
-	04710-04145		HOSE,RH VM375	ﾎｰｽ	1	[FC][RTL]

FIG.216 MAST PIPING [VM39A]

(M5028420) マストパイピング

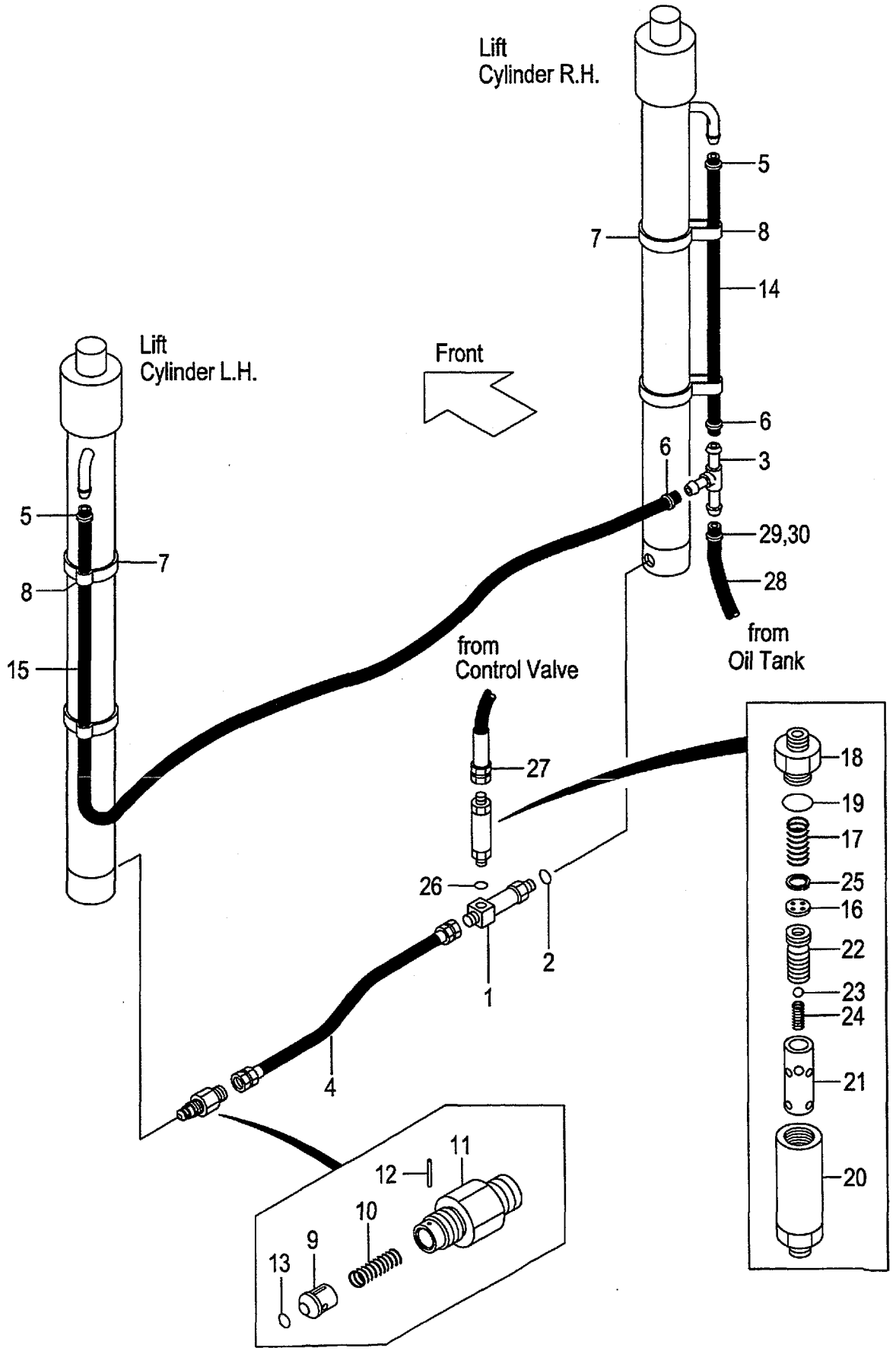

A:VM39A(2T)
B:VM39A(2.5T)

FIG.216
(M5028420)

Item No	Part No.	Mark	Description		Req'd	Remarks : Serial No.
-	04710-04165		HOSE,RH VM400	ホース	1	[FC][RTL]
-	04710-04175		HOSE,RH VM425	ホース	1	[FC][RTL]
-	04710-04190		HOSE,RH VM450	ホース	1	[FC][RTL]
-	04710-04200		HOSE,RH VM475	ホース	1	[FC][RTL]
-	04710-04215		HOSE,RH VM500	ホース	1	[FC][RTL]
-	04710-04245		HOSE,RH VM550	ホース	1	[FC][RTL]
-	04710-04270		HOSE,RH VM600	ホース	1	[FC][RTL]
15	23678-40125		HOSE,LH VM200	ホース	1	
-	23678-40145		HOSE,LH VM225	ホース	1	
-	23678-40150		HOSE,LH VM250	ホース	1	
-	23678-40160		HOSE,LH VM270	ホース	1	
-	23678-40160		HOSE,LH VM275	ホース	1	
-	23678-40170		HOSE,LH VM300	ホース	1	
-	23678-40185		HOSE,LH VM325	ホース	1	
-	23678-40190		HOSE,LH VM330	ホース	1	
-	23678-40200		HOSE,LH VM350	ホース	1	
-	23678-40210		HOSE,LH VM366	ホース	1	
-	23678-40210		HOSE,LH VM370	ホース	1	
-	23678-40210		HOSE,LH VM375	ホース	1	
-	23678-40230		HOSE,LH VM400	ホース	1	
-	23678-40240		HOSE,LH VM425	ホース	1	
-	23678-40255		HOSE,LH VM450	ホース	1	
-	23678-40265		HOSE,LH VM475	ホース	1	
-	23678-40280		HOSE,LH VM500	ホース	1	
-	23678-40310		HOSE,LH VM550	ホース	1	
-	23678-40335		HOSE,LH VM600	ホース	1	
-	04710-04125		HOSE,LH VM200	ホース	1	[FC][RTL]
-	04710-04145		HOSE,LH VM225	ホース	1	[FC][RTL]
-	04710-04150		HOSE,LH VM250	ホース	1	[FC][RTL]
-	04710-04160		HOSE,LH VM270	ホース	1	[FC][RTL]
-	04710-04160		HOSE,LH VM275	ホース	1	[FC][RTL]
-	04710-04170		HOSE,LH VM300	ホース	1	[FC][RTL]
-	04710-04185		HOSE,LH VM325	ホース	1	[FC][RTL]
-	04710-04190		HOSE,LH VM330	ホース	1	[FC][RTL]
-	04710-04200		HOSE,LH VM350	ホース	1	[FC][RTL]
-	04710-04210		HOSE,LH VM366	ホース	1	[FC][RTL]
-	04710-04210		HOSE,LH VM370	ホース	1	[FC][RTL]
-	04710-04210		HOSE,LH VM375	ホース	1	[FC][RTL]
-	04710-04230		HOSE,LH VM400	ホース	1	[FC][RTL]
-	04710-04240		HOSE,LH VM425	ホース	1	[FC][RTL]
-	04710-04255		HOSE,LH VM450	ホース	1	[FC][RTL]
-	04710-04265		HOSE,LH VM475	ホース	1	[FC][RTL]
-	04710-04280		HOSE,LH VM500	ホース	1	[FC][RTL]
-	04710-04310		HOSE,LH VM550	ホース	1	[FC][RTL]
-	04710-04335		HOSE,LH VM600	ホース	1	[FC][RTL]
A3	234A8-41001		REGURATOR-ASSY,FLOW	レギュレータアッセン	1	INC.16-25
16	NO PART NO.	#	PLATE	プレート	1	
17	27979-43101		SPRING	スプリング	1	
18	NO PART NO.	#	NIPPLE	ニップル	1	
19	03320-00280		O-RING	Oリング	1	

FIG.216 MAST PIPING [VM39A]

(M5028420) マストパイピング

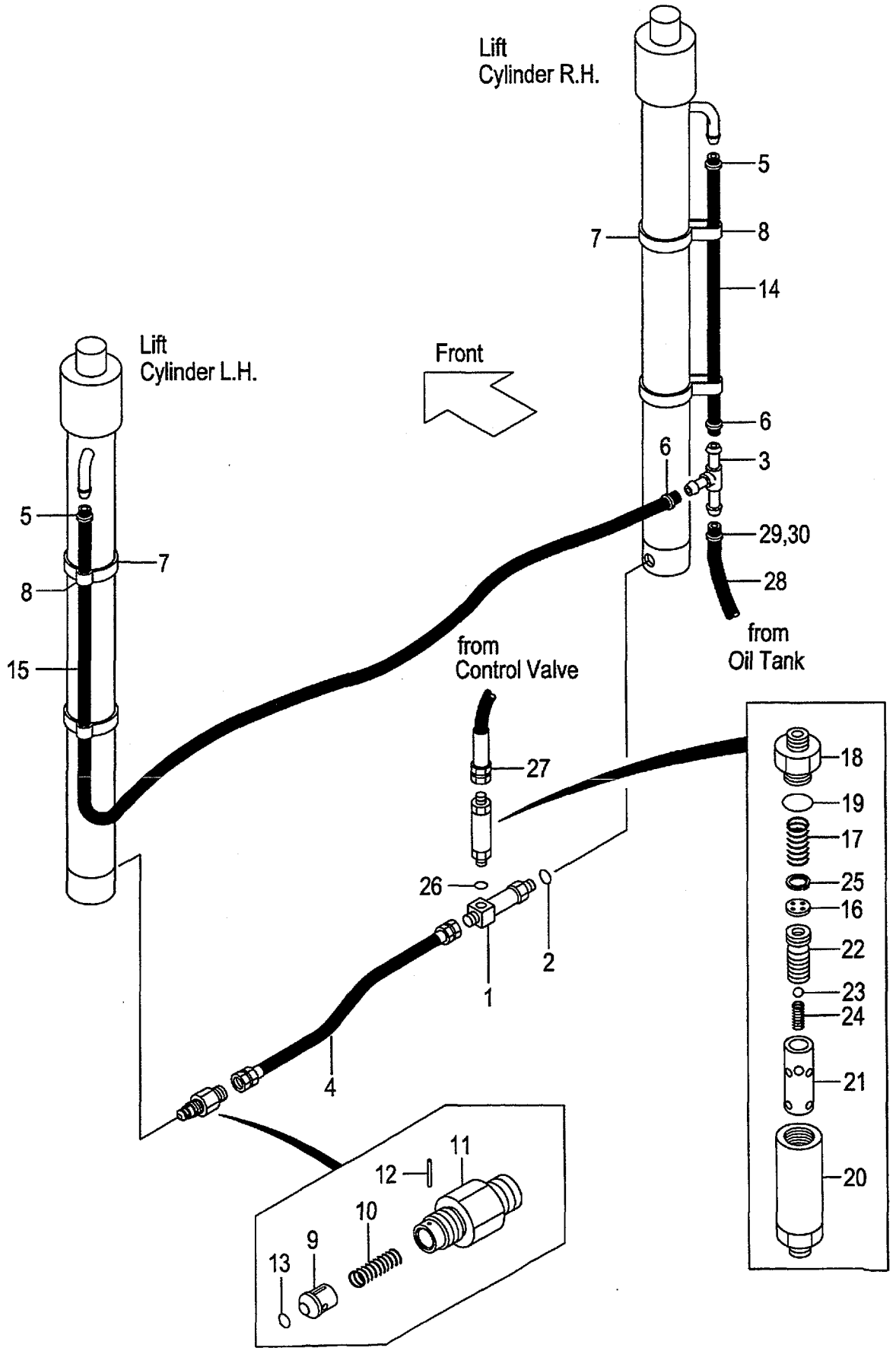

A:VM39A(2T)
B:VM39A(2.5T)

Item No	Part No.	Mark	Description		Req'd	Remarks : Serial No.
20	NO PART NO.	#	CASE	ケース	1	
21	NO PART NO.	#	SLEEVE	スリーブ	1	
22	NO PART NO.	#	PISTON	ピストン	1	
23	24459-42951		BALL,NYLON	ボール	1	
24	214A8-44151		SPRING	スプリング	1	
25	02110-00018		RING,SNAP	スナップリング	1	
26	03320-00180		O-RING	Oリング	1	
27	239A8-42001		HOSE	ホース	1	
28	23678-40110		HOSE	ホース	1	
-	04710-04125		HOSE	ホース	1	[FC][RTL]
29	04911-00018		CLIP	クリップ	1	
-	04911-00021		CLIP	クリップ	1	[FC][RTL]
30	04914-00016		CLIP	クリップ	1	
-	04911-00021		CLIP	クリップ	1	[FC][RTL]

FIG.217 FORK [VFM39A]

(M5028130) フォーク

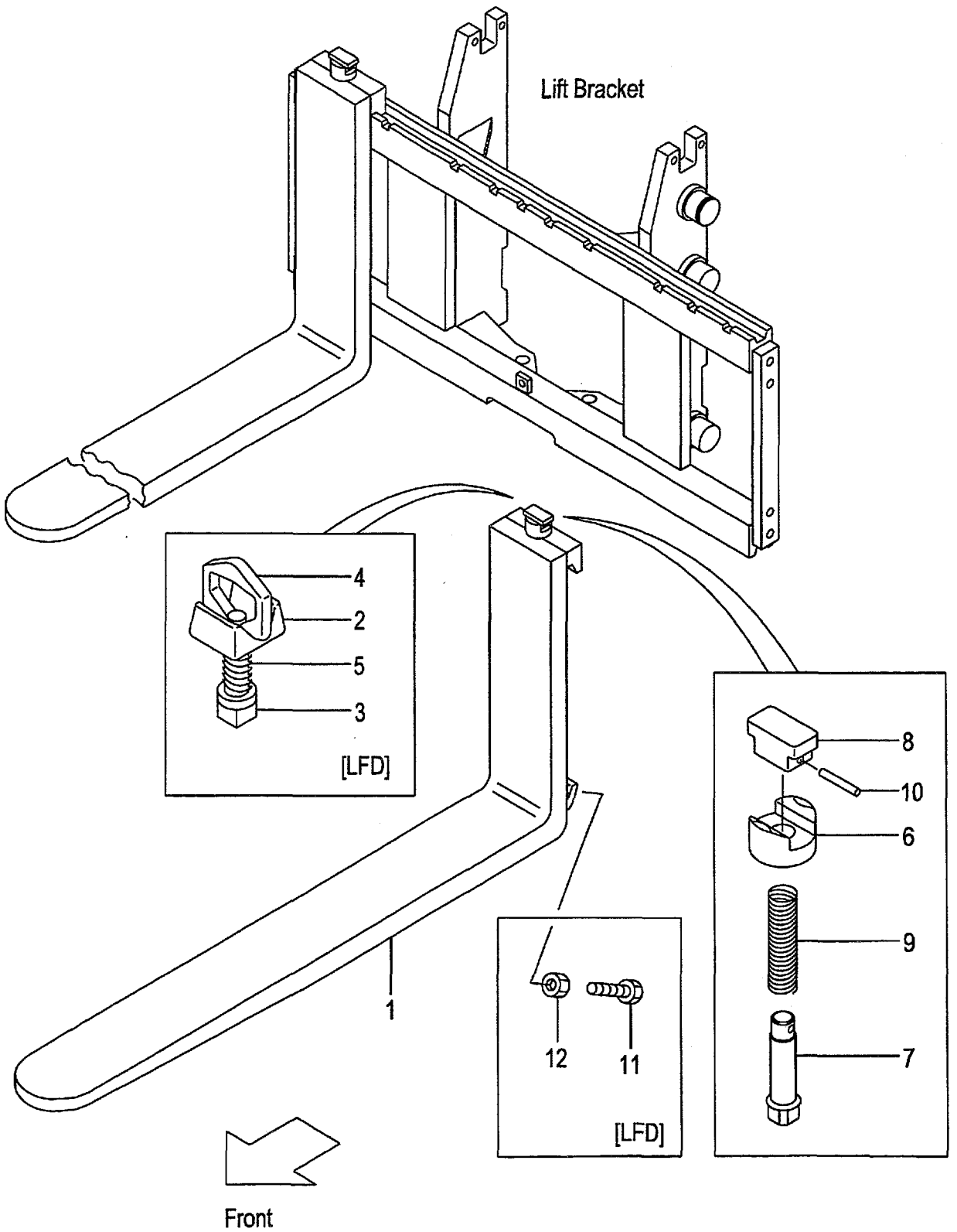

A:VFM39A(2T)
B:VFM39A(2.5T)

FIG.217
(M5028130)

Item No	Part No.	Mark	Description		Req'd	Remarks : Serial No.
1	231A8-10101		FORK	ﾌｫｰｸ	2	A (L=920) INC.6-10
-	214A8-10512		FORK	ﾌｫｰｸ	2	B (L=1070) INC.6-10
-	214A8-10512		FORK	ﾌｫｰｸ	2	[EX] INC.6-10
-	LB24H8-10131		FORK	ﾌｫｰｸ	2	(L=1100)(EU PRODUCT ONLY) INC.6-10
-	231A8-10171		FORK	ﾌｫｰｸ	2	A [LF090] INC.6-10
-	231F8-10571		FORK	ﾌｫｰｸ	2	B [LF090] INC.6-10
-	231A8-10101		FORK	ﾌｫｰｸ	2	A [LF092] INC.6-10
-	231F8-10501		FORK	ﾌｫｰｸ	2	B [LF092] INC.6-10
-	214A8-10582		FORK	ﾌｫｰｸ	2	[LF100] INC.6-10
-	214A8-10512		FORK	ﾌｫｰｸ	2	[LF107] INC.6-10
-	214A8-10592		FORK	ﾌｫｰｸ	2	[LF110] INC.6-10
-	214A8-10602		FORK	ﾌｫｰｸ	2	[LF120] INC.6-10
-	214A8-10522		FORK	ﾌｫｰｸ	2	[LF122] INC.6-10
-	214A8-10612		FORK	ﾌｫｰｸ	2	[LF130] INC.6-10
-	214A8-10532		FORK	ﾌｫｰｸ	2	[LF137] INC.6-10
-	214A8-10622		FORK	ﾌｫｰｸ	2	[LF140] INC.6-10
-	214A8-10632		FORK	ﾌｫｰｸ	2	[LF150] INC.6-10
-	214A8-10542		FORK	ﾌｫｰｸ	2	[LF152] INC.6-10
-	214A8-10642		FORK	ﾌｫｰｸ	2	[LF160] INC.6-10
-	214A8-10552		FORK	ﾌｫｰｸ	2	[LF167] INC.6-10
-	214A8-10653		FORK	ﾌｫｰｸ	2	[LF170] INC.6-10
-	214A8-10663		FORK	ﾌｫｰｸ	2	[LF180] INC.6-10
-	214A8-10563		FORK	ﾌｫｰｸ	2	[LF182] INC.6-10
-	214A8-10673		FORK	ﾌｫｰｸ	2	[LF190] INC.6-10
-	214A8-10683		FORK	ﾌｫｰｸ	2	[LF200] INC.6-10
-	234A8-10571		FORK	ﾌｫｰｸ	2	[LFD090] INC.2-5
-	234A8-10501		FORK	ﾌｫｰｸ	2	[LFD092] INC.2-5
-	234A8-10581		FORK	ﾌｫｰｸ	2	[LFD100] INC.2-5
-	234A8-10511		FORK	ﾌｫｰｸ	2	[LFD107] INC.2-5
-	234A8-10591		FORK	ﾌｫｰｸ	2	[LFD110] INC.2-5
-	234A8-10601		FORK	ﾌｫｰｸ	2	[LFD120] INC.2-5
-	234A8-10521		FORK	ﾌｫｰｸ	2	[LFD122] INC.2-5
-	234A8-10611		FORK	ﾌｫｰｸ	2	[LFD130] INC.2-5
-	234A8-10531		FORK	ﾌｫｰｸ	2	[LFD137] INC.2-5
-	234A8-10621		FORK	ﾌｫｰｸ	2	[LFD140] INC.2-5
-	234A8-10631		FORK	ﾌｫｰｸ	2	[LFD150] INC.2-5
-	234A8-10541		FORK	ﾌｫｰｸ	2	[LFD152] INC.2-5
-	234A8-10641		FORK	ﾌｫｰｸ	2	[LFD160] INC.2-5
-	234A8-10551		FORK	ﾌｫｰｸ	2	[LFD167] INC.2-5
-	234A8-10652		FORK	ﾌｫｰｸ	2	[LFD170] INC.2-5
-	234A8-10662		FORK	ﾌｫｰｸ	2	[LFD180] INC.2-5
-	234A8-10562		FORK	ﾌｫｰｸ	2	[LFD182] INC.2-5
-	234A8-10672		FORK	ﾌｫｰｸ	2	[LFD190] INC.2-5

FIG.217 FORK [VFM39A]

(M5028130) フォーク

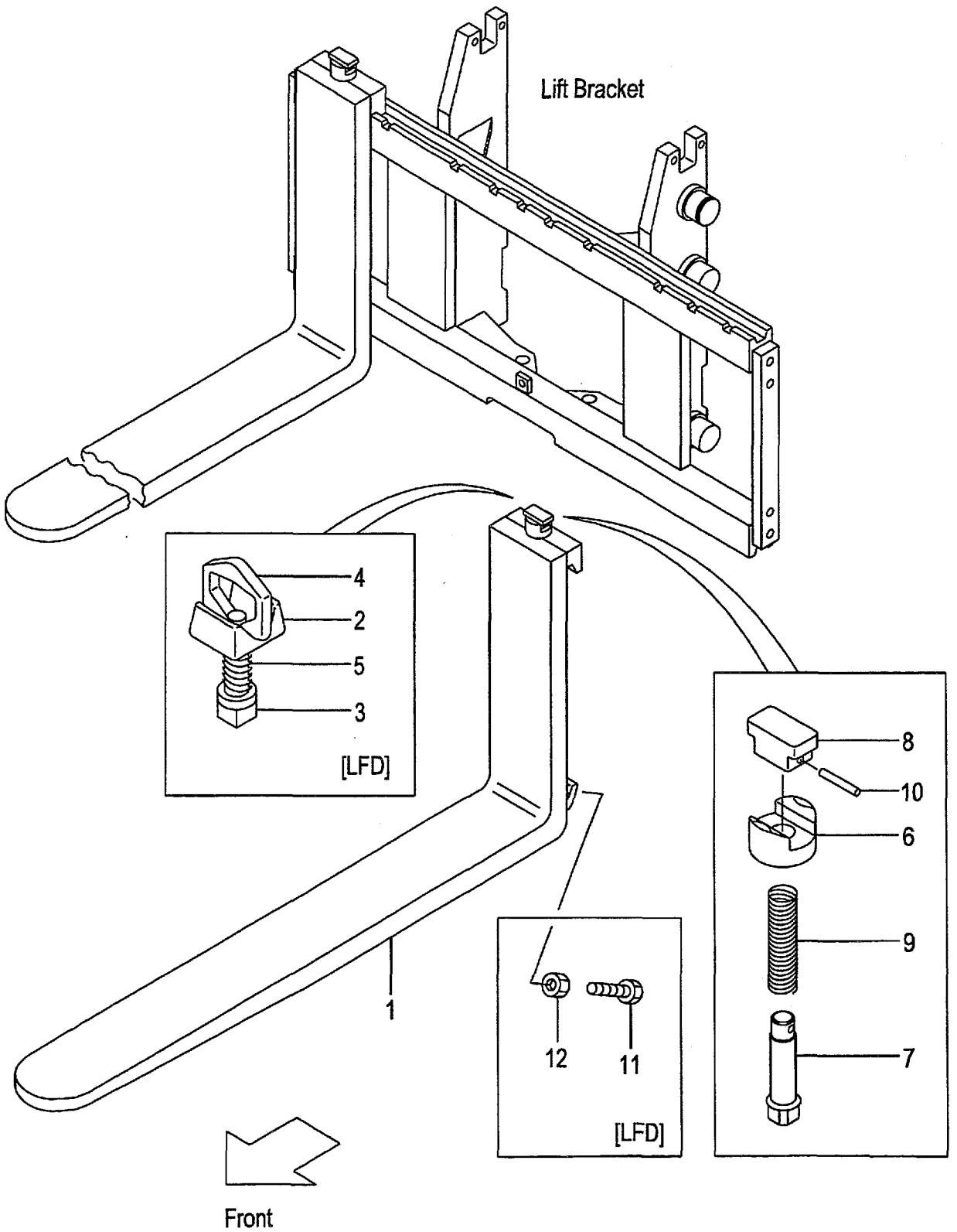

A:VFM39A(2T)
B:VFM39A(2.5T)

FIG.217
(M5028130)

Item No	Part No.	Mark	Description		Req'd	Remarks : Serial No.
-	234A8-10682		FORK	ﾌｫｰｸ	2	[LFD200] INC.2-5
A1	214A8-11001		STOPPER-ASSY,FORK	ｽﾄｯﾊﾟｱｯｾﾝ	2	[LFD] INC.2-5
2	214A8-12001		HEAD,FORK	ﾍｯﾄﾞ	2	[LFD]
3	214A8-12011		STOPPER,FORK	ｽﾄｯﾊﾟ	2	[LFD]
4	214A8-12021		HANDLE	ﾊﾝﾄﾞﾙ	2	[LFD]
5	214A8-12031		SPRING	ｽﾌﾟﾘﾝｸﾞ	2	[LFD]
6	216G8-12921		HOLDER	ﾎﾙﾀﾞ	2	[LF]
7	231A8-12001		PIN	ﾋﾟﾝ	2	[LF]
8	231A8-12011		KNOB	ﾉﾌﾞ	2	[LF]
9	231A8-12021		SPRING	ｽﾌﾟﾘﾝｸﾞ	2	[LF]
10	231A8-12031		PIN,SPRING	ﾋﾟﾝ	2	[LF]
11	216G8-12101		BOLT	ﾎﾞﾙﾄ	4	[LFD]
12	01402-00010		NUT	ﾅｯﾄ	4	[LFD]

FIG.218 LIFT BRACKET [VFM39A]

(M5020610) リフトブラケット

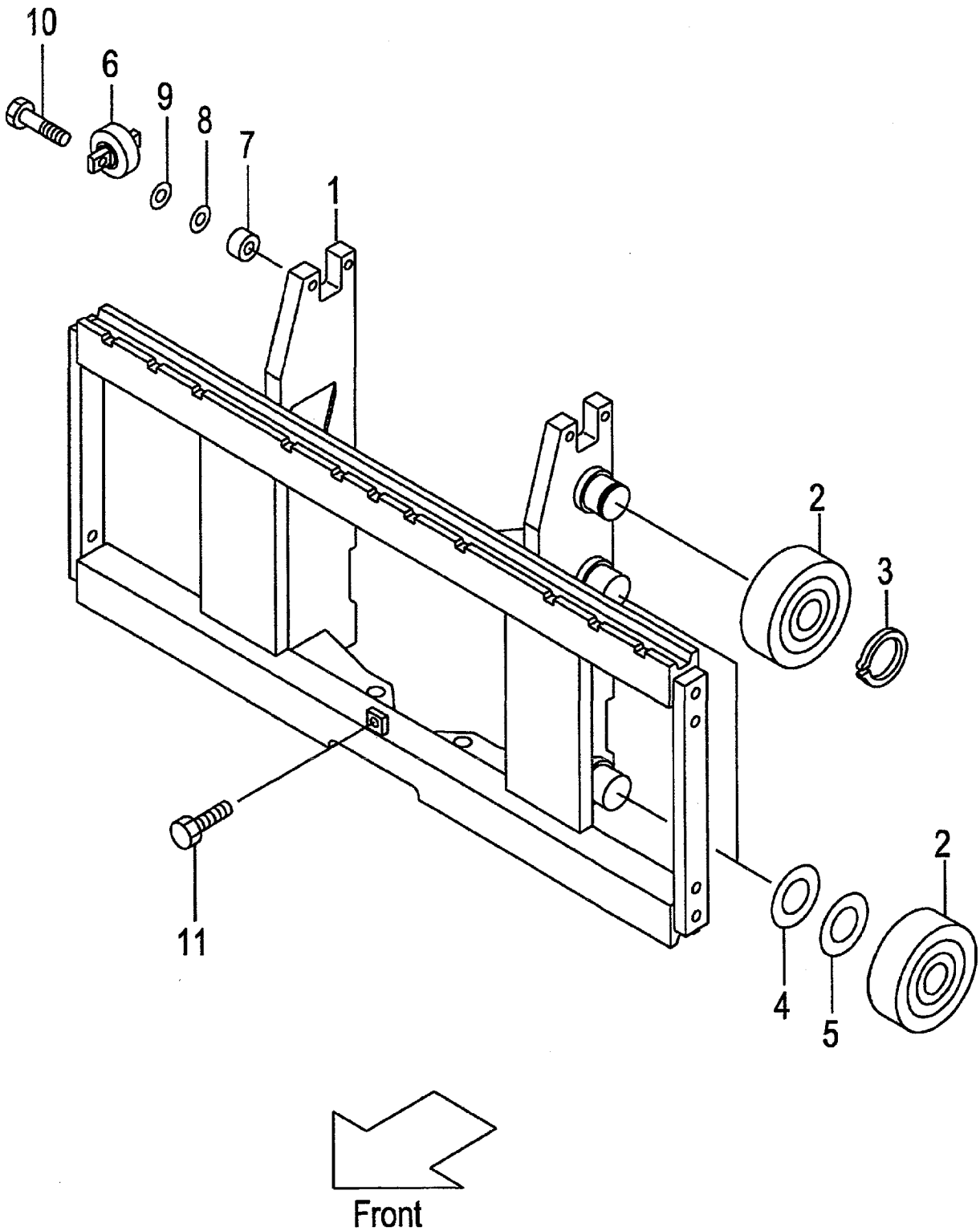

A:VFM39A(2T)
B:VFM39A(2.5T)

FIG.218
(M5020610)

Item No	Part No.	Mark	Description		Req'd	Remarks : Serial No.
1	239A0-60101		BRACKET,LIFT	ﾌﾞﾗｹｯﾄ	1	
-	539A1-64101		BRACKET,LIFT	ﾌﾞﾗｹｯﾄ	1	[WFX110][WFX114][WFX127] [WFX135][WFX138]
-	539A1-64111		BRACKET,LIFT (L)	ﾌﾞﾗｹｯﾄ	1	[WFX135][WFX138][WFX145] [WFX146][WFX154][WFX180]
2	277P8-22051		ROLLER,END	ﾛｰﾗ	6	
-	277P8-22061		ROLLER,END	ﾛｰﾗ	(6)	
-	577P3-74001		ROLLER,END	ﾛｰﾗ	6	[FC][CS35][FCS35][FCS45]
-	577P3-74011		ROLLER,END	ﾛｰﾗ	(4)	[FC][CS35][FCS35][FCS45]
3	02100-00045		RING,SNAP	ｽﾅｯﾌﾟﾘﾝｸﾞ	2	
4	277P8-22071		SHIM,T-0.5	ｼﾑ	5	
5	277P8-22081		SHIM,T-1.0	ｼﾑ	5	
6	23458-32052		ROLLER,SIDE	ﾛｰﾗ	2	
-	514A3-71702		ROLLER,SIDE	ﾛｰﾗ	2	[FC][CS35][FCS35][FCS45]
7	22548-34031		SPACER	ｽﾍﾟｰｻ	4	
8	22548-34051		SHIM,T-0.5	ｼﾑ	5	
9	22548-34061		SHIM,T-1.0	ｼﾑ	5	
10	01184-12050		BOLT & WASHER	ﾎﾞﾙﾄ&ﾜｯｼｬ	4	
-	01184-12040		BOLT & WASHER	ﾎﾞﾙﾄ&ﾜｯｼｬ	4	[FC][CS35][FCS35][FCS45]
11	01184-12025		BOLT & WASHER	ﾎﾞﾙﾄ&ﾜｯｼｬ	1	

FIG.219 BACKREST [VFM39A]

(M5028250) ﾊﾞｯｸﾚｽﾄ

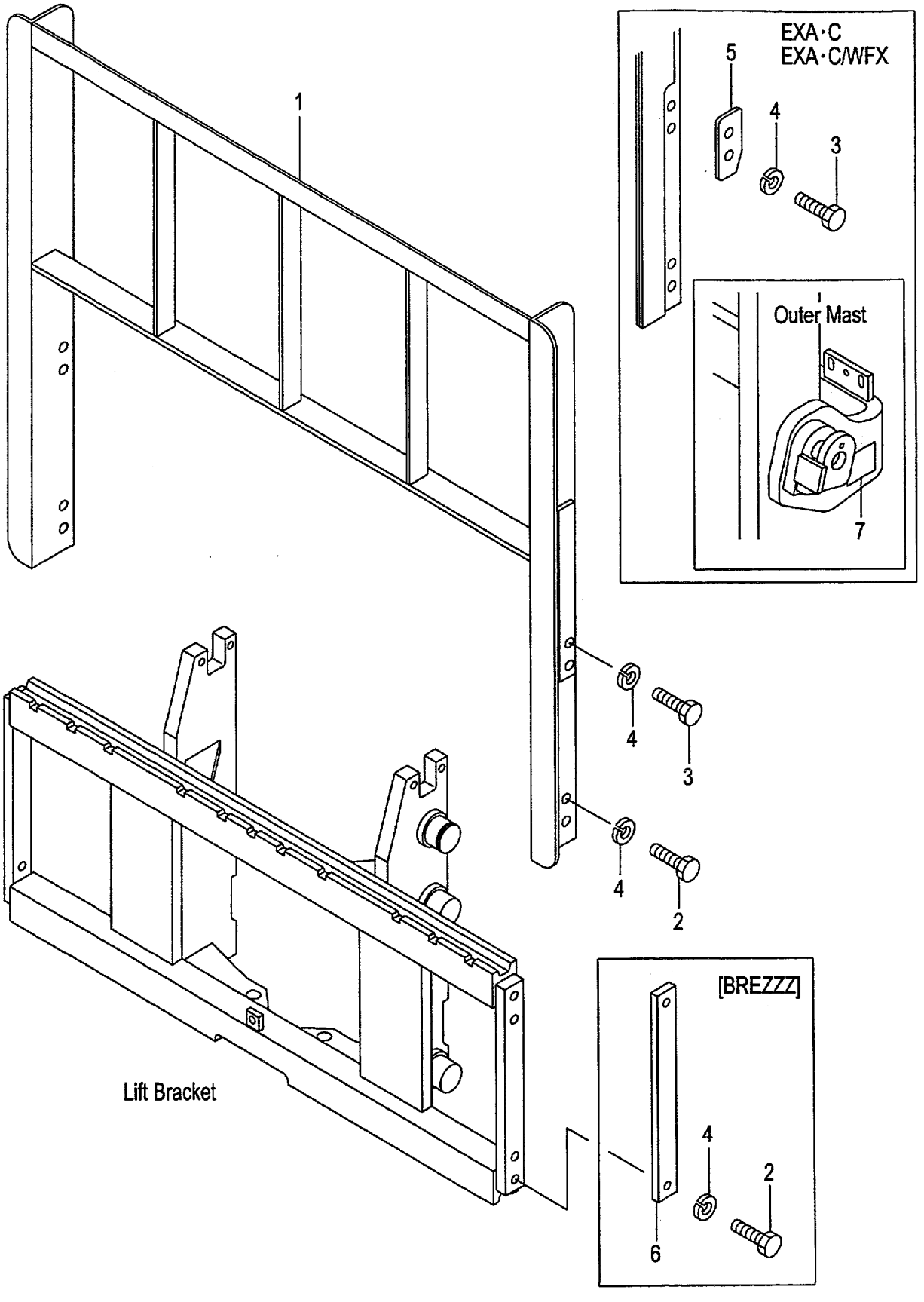

A:VFM39A(2T)
B:VFM39A(2.5T)

FIG.219
(M5028250)

Item No	Part No.	Mark	Description		Req'd	Remarks : Serial No.
1	234A8-22202		BACKREST	ﾊﾞｯｸﾚｽﾄ	1	(WITHOUT BREZZZ)
-	534A2-74001		BACKREST	ﾊﾞｯｸﾚｽﾄ	1	[EXA][EXC]
-	239A8-20101		BACKREST	ﾊﾞｯｸﾚｽﾄ	1	[HBR110]
-	239A8-20111		BACKREST	ﾊﾞｯｸﾚｽﾄ	1	[HBR120]
-	239A8-20121		BACKREST	ﾊﾞｯｸﾚｽﾄ	1	[HBR130]
-	239A8-20131		BACKREST	ﾊﾞｯｸﾚｽﾄ	1	[HBR140]
-	239A8-20141		BACKREST	ﾊﾞｯｸﾚｽﾄ	1	[HBR150]
-	534A1-64402		BACKREST	ﾊﾞｯｸﾚｽﾄ	1	[WFX135]
-	534A1-64412		BACKREST	ﾊﾞｯｸﾚｽﾄ	1	[WFX146]
-	534A2-74101		BACKREST	ﾊﾞｯｸﾚｽﾄ	1	[WFX135/EXA][WFX135/EXC]
-	534A2-74201		BACKREST	ﾊﾞｯｸﾚｽﾄ	1	[WFX146/EXA][WFX146/EXC]
2	01100-14025		BOLT	ﾎﾞﾙﾄ	4	
-	01100-14030		BOLT	ﾎﾞﾙﾄ	4	[HBR]
3	01100-14030		BOLT	ﾎﾞﾙﾄ	4	(WITHOUT BREZZZ)
-	01100-14035		BOLT	ﾎﾞﾙﾄ	4	[EXA][EXC][WFX/EXA] [WFX/EXC]
4	02010-00014		WASHER	ﾜｯｼｬ	8	
-	02010-00014		WASHER	ﾜｯｼｬ	4	[BREZZZ]
5	534A2-74051		PLATE,STOPPER	ﾌﾟﾚｰﾄ	2	[EXA][EXC][WFX/EXA] [WFX/EXC]
6	23659-42161		PLATE	ﾌﾟﾚｰﾄ	2	[BREZZZ]
7	534A2-74301		DECAL,CAUTION	ﾃﾞｶﾙ	1	[EXA][EXC][WFX/EXA] [WFX/EXC]

FIG.220 MAST [VFM39A]

(M5020410) マスト

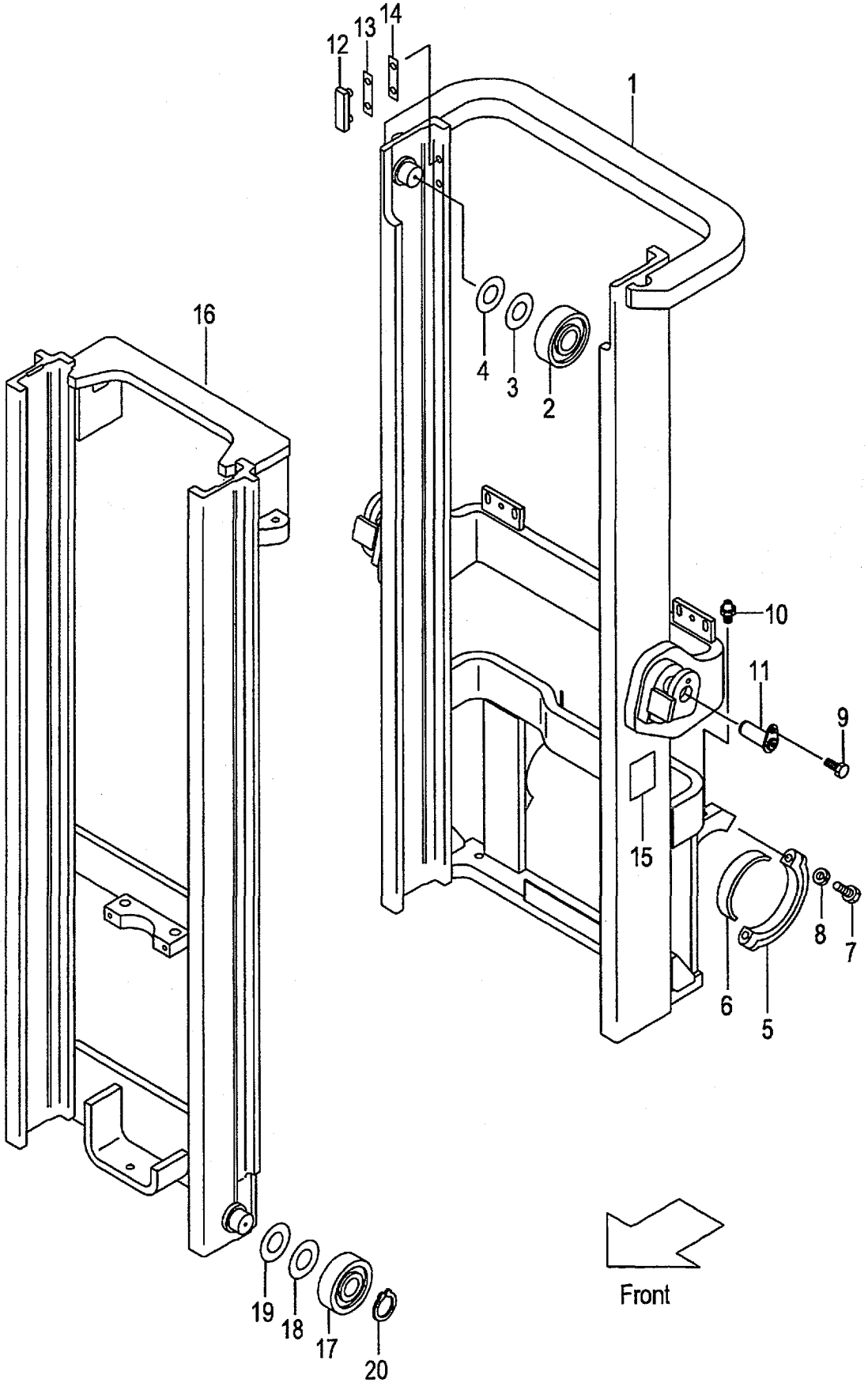

A:VFM39A(2T)
B:VFM39A(2.5T)

FIG.220
(M5020410)

Item No	Part No.	Mark	Description		Req'd	Remarks : Serial No.
1	239A0-40011		MAST,OUTER VFM200	アウタマスト	1	
-	239A0-40021		MAST,OUTER VFM225	アウタマスト	1	
-	239A0-40031		MAST,OUTER VFM250	アウタマスト	1	
-	239A0-40041		MAST,OUTER VFM270	アウタマスト	1	
-	239A0-40051		MAST,OUTER VFM275	アウタマスト	1	
-	239A0-40001		MAST,OUTER VFM300	アウタマスト	1	
-	239A0-40061		MAST,OUTER VFM325	アウタマスト	1	
-	239A0-40071		MAST,OUTER VFM330	アウタマスト	1	
-	239A0-40081		MAST,OUTER VFM350	アウタマスト	1	
-	239A0-40091		MAST,OUTER VFM366	アウタマスト	1	
-	239A0-40101		MAST,OUTER VFM370	アウタマスト	1	
-	239A0-40111		MAST,OUTER VFM375	アウタマスト	1	
-	239A0-40121		MAST,OUTER VFM400	アウタマスト	1	
-	239A0-40131		MAST,OUTER VFM425	アウタマスト	1	
-	239A0-40141		MAST,OUTER VFM450	アウタマスト	1	
-	239A0-40151		MAST,OUTER VFM475	アウタマスト	1	
-	239A0-40161		MAST,OUTER VFM500	アウタマスト	1	
-	239A0-40171		MAST,OUTER VFM550	アウタマスト	1	
-	239A0-40181		MAST,OUTER VFM600	アウタマスト	1	
-	539A3-91211		MAST,OUTER VFM200	アウタマスト	1	[RW][HC][EXR]
-	539A3-91221		MAST,OUTER VFM225	アウタマスト	1	[RW][HC][EXR]
-	539A3-91231		MAST,OUTER VFM250	アウタマスト	1	[RW][HC][EXR]
-	539A3-91241		MAST,OUTER VFM270	アウタマスト	1	[RW][HC][EXR]
-	539A3-91251		MAST,OUTER VFM275	アウタマスト	1	[RW][HC][EXR]
-	539A3-91201		MAST,OUTER VFM300	アウタマスト	1	[RW][HC][EXR]
-	539A3-91261		MAST,OUTER VFM325	アウタマスト	1	[RW][HC][EXR]
-	539A3-91271		MAST,OUTER VFM330	アウタマスト	1	[RW][HC][EXR]
-	539A3-91281		MAST,OUTER VFM350	アウタマスト	1	[RW][HC][EXR]
-	539A3-91291		MAST,OUTER VFM366	アウタマスト	1	[RW][HC][EXR]
-	539A3-91301		MAST,OUTER VFM370	アウタマスト	1	[RW][HC][EXR]
-	539A3-91311		MAST,OUTER VFM375	アウタマスト	1	[RW][HC][EXR]
-	539A3-91321		MAST,OUTER VFM400	アウタマスト	1	[RW][HC][EXR]
-	539A3-91331		MAST,OUTER VFM425	アウタマスト	1	[RW][HC][EXR]
-	539A3-91341		MAST,OUTER VFM450	アウタマスト	1	[RW][HC][EXR]
-	539A3-91351		MAST,OUTER VFM475	アウタマスト	1	[RW][HC][EXR]
-	539A3-91361		MAST,OUTER VFM500	アウタマスト	1	[RW][HC][EXR]
-	539A3-91371		MAST,OUTER VFM550	アウタマスト	1	[RW][HC][EXR]
-	539A3-91381		MAST,OUTER VFM600	アウタマスト	1	[RW][HC][EXR]
2	277P8-22051		ROLLER,END	ローラ	2	
-	577P3-74001		ROLLER,END	ローラ	2	[FC][CS35][FCS35][FCS45] [FCS55]
3	277P8-22071		SHIM,T-0.5	シム	12	
4	277P8-22081		SHIM,T-1.0	シム	12	
5	22018-30065		CAP,MAST-SUPPORT	キャップ	2	
-	22018-30064		CAP,MAST-SUPPORT	キャップ	2	(EU PRODUCT ONLY)
6	214A8-02201		BUSHING	ブッシング	2	
7	01103-16065		BOLT	ボルト	4	
8	02011-00016		WASHER	ワッシャ	4	
9	216G8-52301		BOLT & WASHER	ボルト&ワッシャ	2	
-	01184-10020		BOLT & WASHER	ボルト&ワッシャ	2	(EU PRODUCT ONLY)

FIG.220 MAST [VFM39A]

(M5020410) マスト

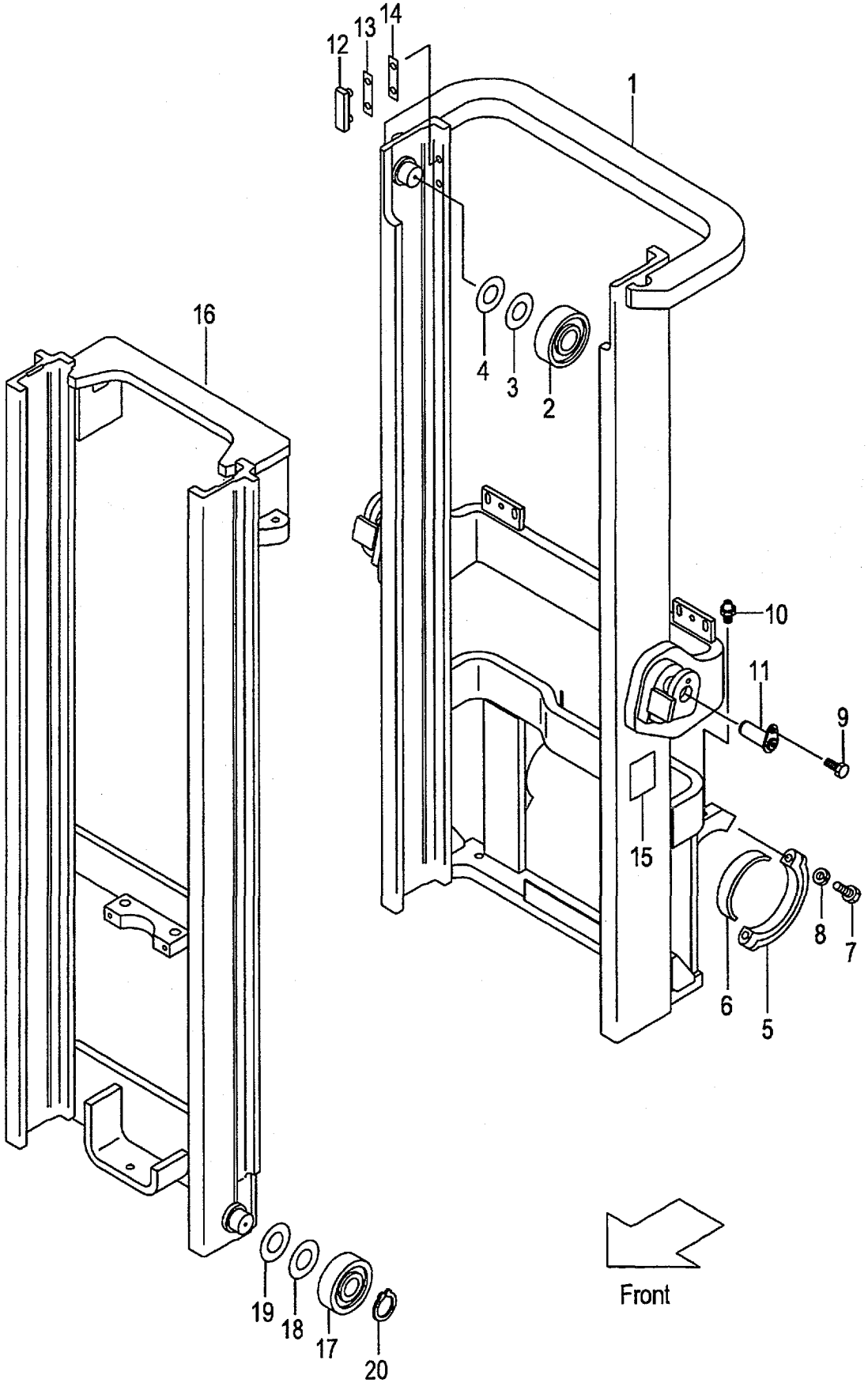

A:VFM39A(2T)
B:VFM39A(2.5T)

Item No	Part No.	Mark	Description		Req'd	Remarks : Serial No.
10	04901-00100		FITTING	ﾌｨｯﾃｨﾝｸﾞ	2	
11	272K8-52201		PIN	ﾋﾟﾝ	2	
-	234A8-02001		PIN	ﾋﾟﾝ	2	(EU PRODUCT ONLY)
12	216G8-33401		SLIPPER	ｽﾘｯﾊﾟ	2	
13	216G8-33361		SHIM,T-0.5	ｼﾑ	8	
14	216G8-33371		SHIM,T-1.0	ｼﾑ	4	
15	23678-06002		PLATE,NAME	ﾌﾟﾚｰﾄ	1	
16	231A0-40212		MAST,INNER VFM200	ｲﾝﾅﾏｽﾄ	1	
-	231A0-40222		MAST,INNER VFM225	ｲﾝﾅﾏｽﾄ	1	
-	231A0-40232		MAST,INNER VFM250	ｲﾝﾅﾏｽﾄ	1	
-	231A0-40242		MAST,INNER VFM270	ｲﾝﾅﾏｽﾄ	1	
-	231A0-40252		MAST,INNER VFM275	ｲﾝﾅﾏｽﾄ	1	
-	231A0-40202		MAST,INNER VFM300	ｲﾝﾅﾏｽﾄ	1	
-	231A0-40262		MAST,INNER VFM325	ｲﾝﾅﾏｽﾄ	1	
-	231A0-40272		MAST,INNER VFM330	ｲﾝﾅﾏｽﾄ	1	
-	231A0-40282		MAST,INNER VFM350	ｲﾝﾅﾏｽﾄ	1	
-	231A0-40292		MAST,INNER VFM366	ｲﾝﾅﾏｽﾄ	1	
-	231A0-40302		MAST,INNER VFM370	ｲﾝﾅﾏｽﾄ	1	
-	231A0-40312		MAST,INNER VFM375	ｲﾝﾅﾏｽﾄ	1	
-	231A0-40322		MAST,INNER VFM400	ｲﾝﾅﾏｽﾄ	1	
-	231A0-40332		MAST,INNER VFM425	ｲﾝﾅﾏｽﾄ	1	
-	231A0-40342		MAST,INNER VFM450	ｲﾝﾅﾏｽﾄ	1	
-	231A0-40352		MAST,INNER VFM475	ｲﾝﾅﾏｽﾄ	1	
-	231A0-40362		MAST,INNER VFM500	ｲﾝﾅﾏｽﾄ	1	
-	231A0-40372		MAST,INNER VFM550	ｲﾝﾅﾏｽﾄ	1	
-	231A0-40382		MAST,INNER VFM600	ｲﾝﾅﾏｽﾄ	1	
17	277P8-22051		ROLLER,END	ﾛｰﾗ	2	
-	577P3-74001		ROLLER,END	ﾛｰﾗ	2	[FC][CS35][FCS35][FCS45] [FCS55]
-	277P8-22061		ROLLER,END	ﾛｰﾗ	(2)	
-	577P3-74011		ROLLER,END	ﾛｰﾗ	(2)	[FC][CS35][FCS35][FCS45] [FCS55]
18	277P8-22071		SHIM,T-0.5	ｼﾑ	12	
-	277P8-22071		SHIM,T-0.5	ｼﾑ	10	[FC][CS35][FCS35][FCS45] [FCS55]
19	277P8-22081		SHIM,T-1.0	ｼﾑ	12	
-	277P8-22081		SHIM,T-1.0	ｼﾑ	10	[FC][CS35][FCS35][FCS45] [FCS55]
20	09192-30044		RING,SNAP	ｽﾅｯﾌﾟﾘﾝｸﾞ	2	

FIG.221 TILT GAUGE [VFM39A/(TG,PPC,PR,PRC,MPC)]

(M5020420) ﾃｨﾙﾄｹﾞｰｼﾞ

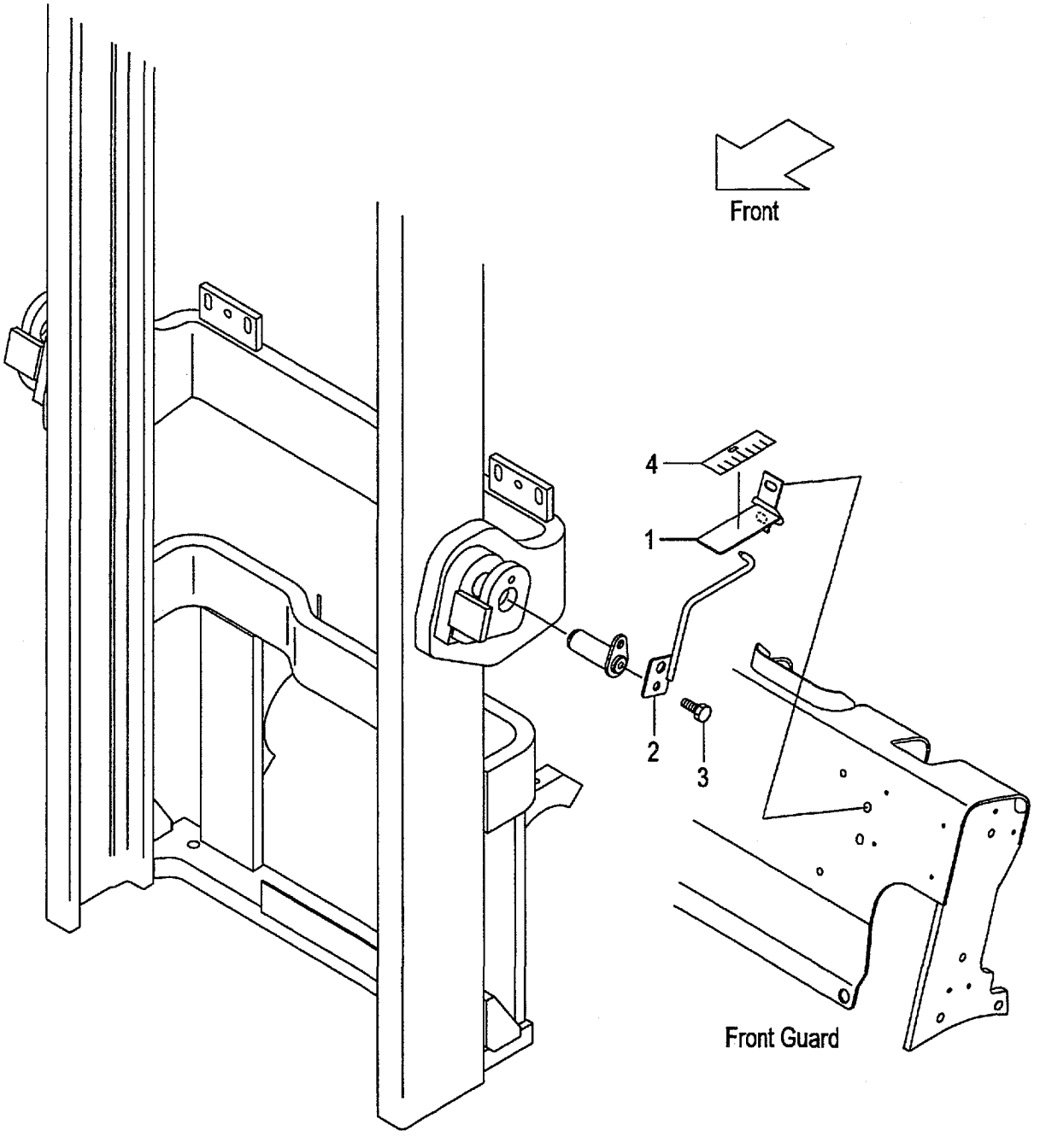

A:VFM39A(2T)
B:VFM39A(2.5T)

FIG.221
(M5020420)

Item No	Part No.	Mark	Description		Req'd	Remarks : Serial No.
1	639A0-10011		GAUGE,TILT	ｹﾞｰｼﾞ	1	[TG/VFM250-600] [PPC/VFM250-600] [PR/VFM250-600]
-	639A0-10011		GAUGE,TILT	ｹﾞｰｼﾞ	1	[PRC/VFM250-600] [MPC/VFM250-600]
2	639A0-10051		INDICATOR	ｲﾝｼﾞｹｰﾀ	1	[TG/VFM250-600] [PPC/VFM250-600] [PR/VFM250-600]
-	639A0-10051		INDICATOR	ｲﾝｼﾞｹｰﾀ	1	[PRC/VFM250-600] [MPC/VFM250-600]
3	216G4-12251		BOLT	ﾎﾞﾙﾄ	1	[TG/VFM250-600] [PPC/VFM250-600] [PR/VFM250-600]
-	216G4-12251		BOLT	ﾎﾞﾙﾄ	1	[PRC/VFM250-600] [MPC/VFM250-600]
4	62459-23371		SEAL,GAUGE	ｼｰﾙ	1	[TG/VFM250-600] [PPC/VFM250-600] [PR/VFM250-600]
-	62459-23371		SEAL,GAUGE	ｼｰﾙ	1	[PRC/VFM250-600] [MPC/VFM250-600]

FIG.222 LIFT CYLINDER (FRONT)[VFM39A]

(M5020510) リフトシリンダ(フロント)

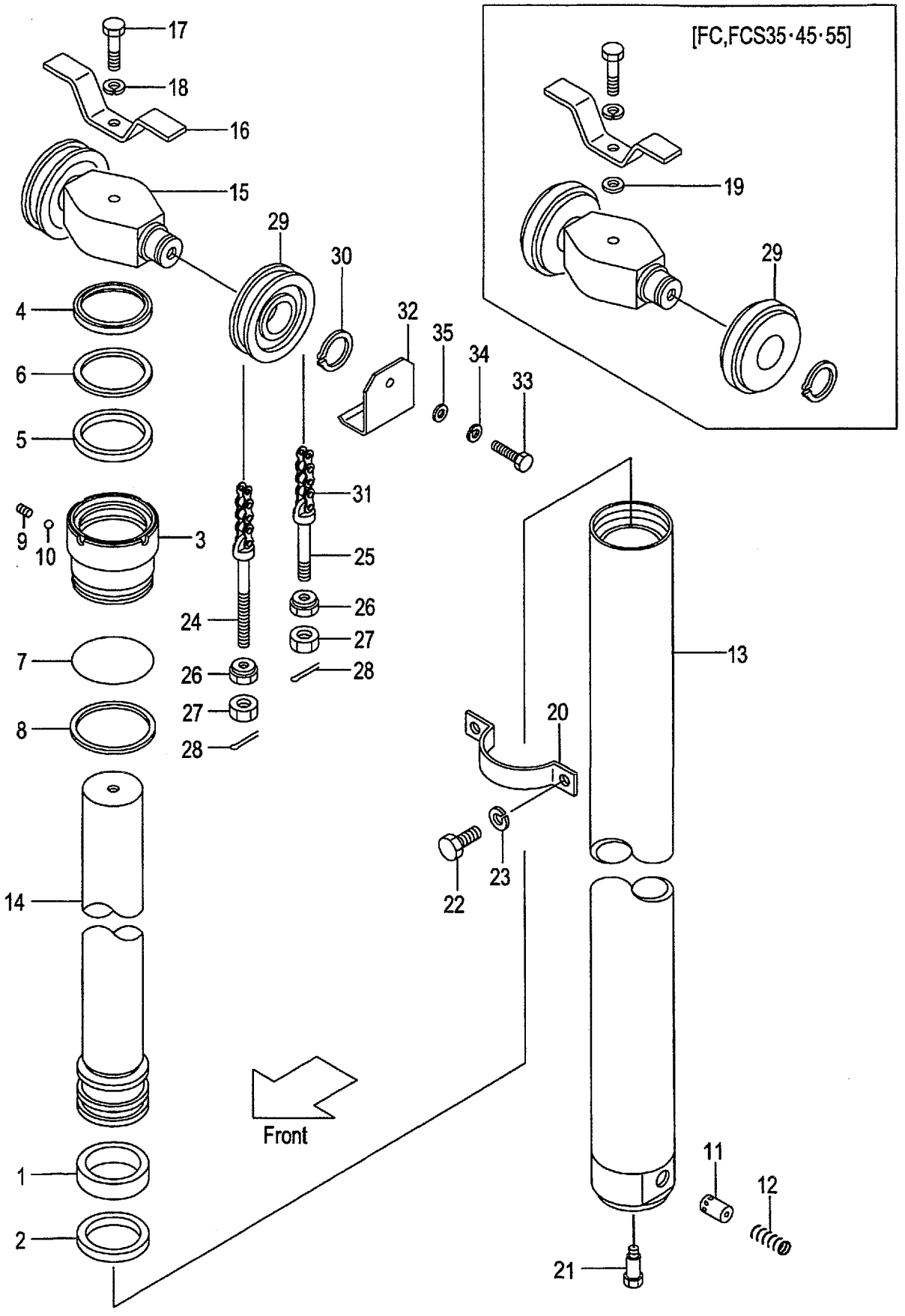

A:VFM39A(2T)
B:VFM39A(2.5T)

FIG.222
(M5020510)

Item No	Part No.	Mark	Description	Req'd	Remarks : Serial No.
A1	277P0-50111		CYL-ASSY,LIFT VFM200 ﾘﾌﾄｼﾘﾝﾀﾞｱｯｾﾝ	1	INC.1-14
-	277P0-50121		CYL-ASSY,LIFT VFM225 ﾘﾌﾄｼﾘﾝﾀﾞｱｯｾﾝ	1	INC.1-14
-	277P0-50131		CYL-ASSY,LIFT VFM250 ﾘﾌﾄｼﾘﾝﾀﾞｱｯｾﾝ	1	INC.1-14
-	277P0-50141		CYL-ASSY,LIFT VFM270 ﾘﾌﾄｼﾘﾝﾀﾞｱｯｾﾝ	1	INC.1-14
-	277P0-50151		CYL-ASSY,LIFT VFM275 ﾘﾌﾄｼﾘﾝﾀﾞｱｯｾﾝ	1	INC.1-14
-	277P0-50101		CYL-ASSY,LIFT VFM300 ﾘﾌﾄｼﾘﾝﾀﾞｱｯｾﾝ	1	INC.1-14
-	277P0-50161		CYL-ASSY,LIFT VFM325 ﾘﾌﾄｼﾘﾝﾀﾞｱｯｾﾝ	1	INC.1-14
-	277P0-50171		CYL-ASSY,LIFT VFM330 ﾘﾌﾄｼﾘﾝﾀﾞｱｯｾﾝ	1	INC.1-14
-	277P0-50181		CYL-ASSY,LIFT VFM350 ﾘﾌﾄｼﾘﾝﾀﾞｱｯｾﾝ	1	INC.1-14
-	277P0-50191		CYL-ASSY,LIFT VFM366 ﾘﾌﾄｼﾘﾝﾀﾞｱｯｾﾝ	1	INC.1-14
-	277P0-50201		CYL-ASSY,LIFT VFM370 ﾘﾌﾄｼﾘﾝﾀﾞｱｯｾﾝ	1	INC.1-14
-	277P0-50211		CYL-ASSY,LIFT VFM375 ﾘﾌﾄｼﾘﾝﾀﾞｱｯｾﾝ	1	INC.1-14
-	277P0-50221		CYL-ASSY,LIFT VFM400 ﾘﾌﾄｼﾘﾝﾀﾞｱｯｾﾝ	1	INC.1-14
-	277P0-50231		CYL-ASSY,LIFT VFM425 ﾘﾌﾄｼﾘﾝﾀﾞｱｯｾﾝ	1	INC.1-14
-	277P0-50241		CYL-ASSY,LIFT VFM450 ﾘﾌﾄｼﾘﾝﾀﾞｱｯｾﾝ	1	INC.1-14
-	277P0-50251		CYL-ASSY,LIFT VFM475 ﾘﾌﾄｼﾘﾝﾀﾞｱｯｾﾝ	1	INC.1-14
-	277P0-50261		CYL-ASSY,LIFT VFM500 ﾘﾌﾄｼﾘﾝﾀﾞｱｯｾﾝ	1	INC.1-14
-	277P0-50271		CYL-ASSY,LIFT VFM550 ﾘﾌﾄｼﾘﾝﾀﾞｱｯｾﾝ	1	INC.1-14
-	277P0-50281		CYL-ASSY,LIFT VFM600 ﾘﾌﾄｼﾘﾝﾀﾞｱｯｾﾝ	1	INC.1-14
1	22438-42641	*	WEARING ｳｴｱﾘﾝｸﾞ	1	
2	53658-42011	*	RING,PISTON ﾘﾝｸﾞ	1	
3	277P0-82061		CAP,CYL ｷｬｯﾌﾟ	1	
4	27410-53201	*	SEAL,DUST ｼｰﾙ	1	
5	23670-82251	*	PACKING ﾊﾟｯｷﾝｸﾞ	1	
6	23670-82261	*	RING,BACK-UP ﾘﾝｸﾞ	1	
7	03350-00850	*	O-RING Oﾘﾝｸﾞ	1	
8	277P0-82071	*	RING,BACK-UP ﾘﾝｸﾞ	1	
9	234A0-52611		PLUG ﾌﾟﾗｸﾞ	1	
10	03190-00006		BALL ﾎﾞｰﾙ	1	
11	229F0-82101		PISTON ﾋﾟｽﾄﾝ	1	
12	24389-46021		SPRING ｽﾌﾟﾘﾝｸﾞ	1	
13	277P0-50311		TUBE,CYL VFM200 ﾁｭｰﾌﾞ	1	
-	277P0-50321		TUBE,CYL VFM225 ﾁｭｰﾌﾞ	1	
-	277P0-50331		TUBE,CYL VFM250 ﾁｭｰﾌﾞ	1	
-	277P0-50341		TUBE,CYL VFM270 ﾁｭｰﾌﾞ	1	
-	277P0-50351		TUBE,CYL VFM275 ﾁｭｰﾌﾞ	1	
-	277P0-50301		TUBE,CYL VFM300 ﾁｭｰﾌﾞ	1	
-	277P0-50361		TUBE,CYL VFM325 ﾁｭｰﾌﾞ	1	
-	277P0-50371		TUBE,CYL VFM330 ﾁｭｰﾌﾞ	1	
-	277P0-50381		TUBE,CYL VFM350 ﾁｭｰﾌﾞ	1	
-	277P0-50391		TUBE,CYL VFM366 ﾁｭｰﾌﾞ	1	
-	277P0-80561		TUBE,CYL VFM370 ﾁｭｰﾌﾞ	1	
-	277P0-50411		TUBE,CYL VFM375 ﾁｭｰﾌﾞ	1	
-	277P0-50421		TUBE,CYL VFM400 ﾁｭｰﾌﾞ	1	
-	277P0-50431		TUBE,CYL VFM425 ﾁｭｰﾌﾞ	1	
-	277P0-50441		TUBE,CYL VFM450 ﾁｭｰﾌﾞ	1	
-	277P0-50451		TUBE,CYL VFM475 ﾁｭｰﾌﾞ	1	
-	277P0-50461		TUBE,CYL VFM500 ﾁｭｰﾌﾞ	1	
-	277P0-50471		TUBE,CYL VFM550 ﾁｭｰﾌﾞ	1	
-	277P0-50481		TUBE,CYL VFM600 ﾁｭｰﾌﾞ	1	

FIG.222 LIFT CYLINDER (FRONT)[VFM39A]

(M5020510) リフトシリンダ(フロント)

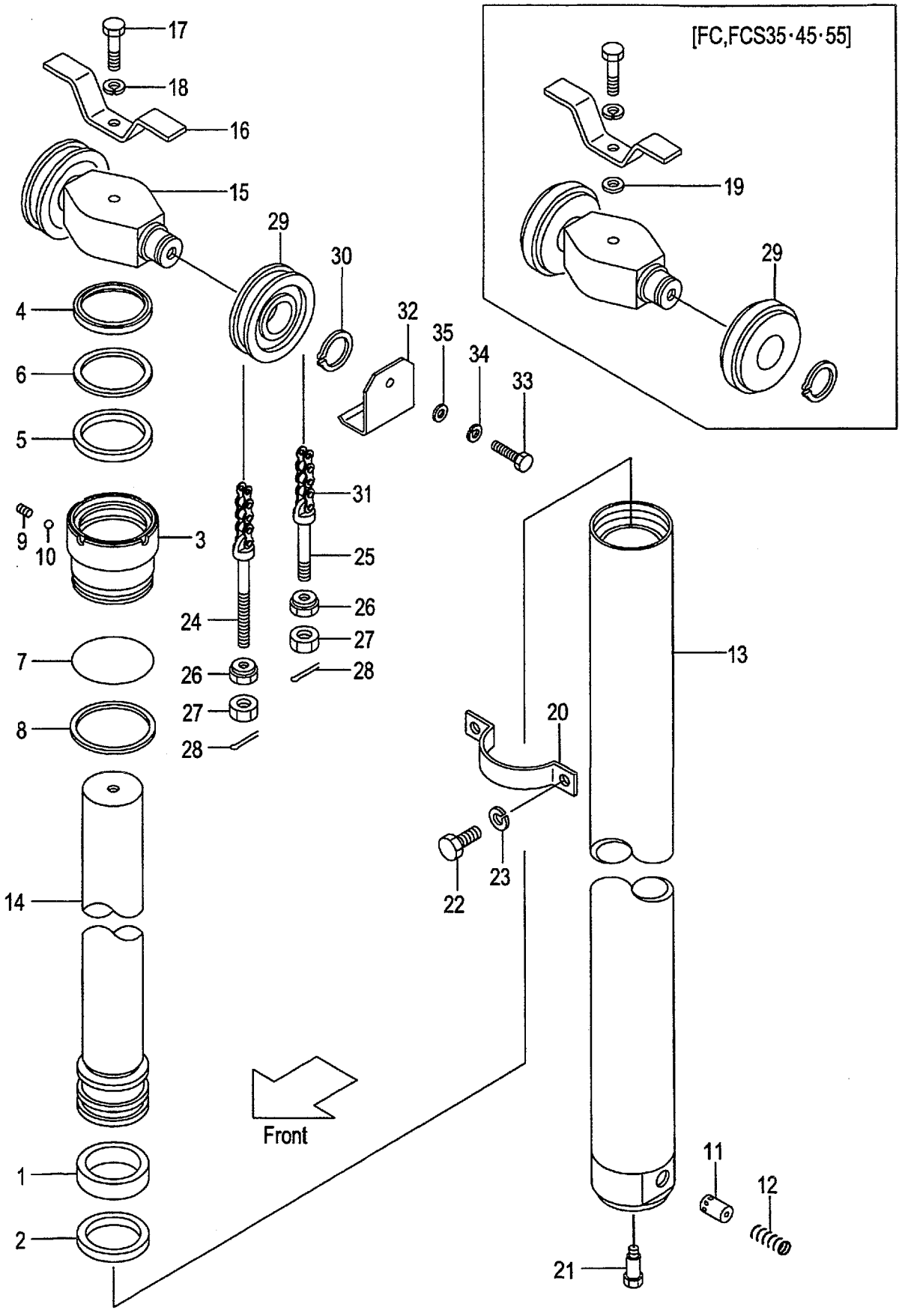

A:VFM39A(2T)
B:VFM39A(2.5T)

Item No	Part No.	Mark	Description		Req'd	Remarks : Serial No.
14	277P0-50511		ROD,PISTON VFM200	ﾛｯﾄﾞ	1	
-	277P0-50521		ROD,PISTON VFM225	ﾛｯﾄﾞ	1	
-	277P0-50531		ROD,PISTON VFM250	ﾛｯﾄﾞ	1	
-	277P0-50541		ROD,PISTON VFM270	ﾛｯﾄﾞ	1	
-	277P0-50551		ROD,PISTON VFM275	ﾛｯﾄﾞ	1	
-	277P0-50501		ROD,PISTON VFM300	ﾛｯﾄﾞ	1	
-	277P0-50561		ROD,PISTON VFM325	ﾛｯﾄﾞ	1	
-	277P0-50571		ROD,PISTON VFM330	ﾛｯﾄﾞ	1	
-	277P0-50581		ROD,PISTON VFM350	ﾛｯﾄﾞ	1	
-	277P0-50591		ROD,PISTON VFM366	ﾛｯﾄﾞ	1	
-	277P0-50601		ROD,PISTON VFM370	ﾛｯﾄﾞ	1	
-	277P0-50611		ROD,PISTON VFM375	ﾛｯﾄﾞ	1	
-	277P0-50621		ROD,PISTON VFM400	ﾛｯﾄﾞ	1	
-	277P0-50631		ROD,PISTON VFM425	ﾛｯﾄﾞ	1	
-	277P0-50641		ROD,PISTON VFM450	ﾛｯﾄﾞ	1	
-	277P0-50651		ROD,PISTON VFM475	ﾛｯﾄﾞ	1	
-	277P0-50661		ROD,PISTON VFM500	ﾛｯﾄﾞ	1	
-	277P0-50671		ROD,PISTON VFM550	ﾛｯﾄﾞ	1	
-	277P0-50681		ROD,PISTON VFM600	ﾛｯﾄﾞ	1	
15	277P0-82501		HEAD,PISTON	ﾍｯﾄﾞ	1	
16	214A0-82681		STOPPER,CHAIN	ｽﾄｯﾊﾟ	1	
17	01100-16075		BOLT	ﾎﾞﾙﾄ	1	
18	02010-00016		WASHER	ﾜｯｼｬ	1	
19	02000-20016		WASHER	ﾜｯｼｬ	1	[FC][FCS35][FCS45][FCS55]
20	214A0-82651		SUPPORT,CYL	ｻﾎﾟｰﾄ	1	
21	214A0-82831		BOLT	ﾎﾞﾙﾄ	1	
22	01103-10020		BOLT	ﾎﾞﾙﾄ	2	
23	02011-00010		WASHER	ﾜｯｼｬ	2	
24	52672-72231		PIN,ANCHOR	ﾋﾟﾝ	2	
-	22218-42111		PIN,ANCHOR	ﾋﾟﾝ	2	[FC][FCS35][FCS45][FCS55]
25	23500-82001		PIN,ANCHOR	ﾋﾟﾝ	2	
-	231A0-82001		PIN,ANCHOR	ﾋﾟﾝ	2	[FC][FCS35][FCS45][FCS55]
26	22218-40191		NUT	ﾅｯﾄ	4	
27	01400-00018		NUT	ﾅｯﾄ	4	
28	02200-03030		PIN	ﾋﾟﾝ	4	
29	234A8-43501		SHEAVE	ｼｰﾌﾞ	2	
-	22208-40031		SHEAVE	ｼｰﾌﾞ	2	[FC][FCS35][FCS45][FCS55]
30	02100-00040		RING,SNAP	ｽﾅｯﾌﾟﾘﾝｸﾞ	2	
31	22679-45611		CHAIN,LEAF VFM200	ﾁｪｰﾝ	2	
-	22679-45671		CHAIN,LEAF VFM225	ﾁｪｰﾝ	2	
-	22679-45711		CHAIN,LEAF VFM250	ﾁｪｰﾝ	2	
-	22679-45771		CHAIN,LEAF VFM270	ﾁｪｰﾝ	2	
-	22679-45791		CHAIN,LEAF VFM275	ﾁｪｰﾝ	2	
-	22679-45811		CHAIN,LEAF VFM300	ﾁｪｰﾝ	2	
-	22679-45891		CHAIN,LEAF VFM325	ﾁｪｰﾝ	2	
-	22679-45891		CHAIN,LEAF VFM330	ﾁｪｰﾝ	2	
-	22679-45951		CHAIN,LEAF VFM350	ﾁｪｰﾝ	2	
-	22679-45991		CHAIN,LEAF VFM366	ﾁｪｰﾝ	2	
-	22679-45991		CHAIN,LEAF VFM370	ﾁｪｰﾝ	2	
-	22679-46011		CHAIN,LEAF VFM375	ﾁｪｰﾝ	2	

FIG.222 LIFT CYLINDER (FRONT)[VFM39A]

(M5020510) リフトシリンダ(フロント)

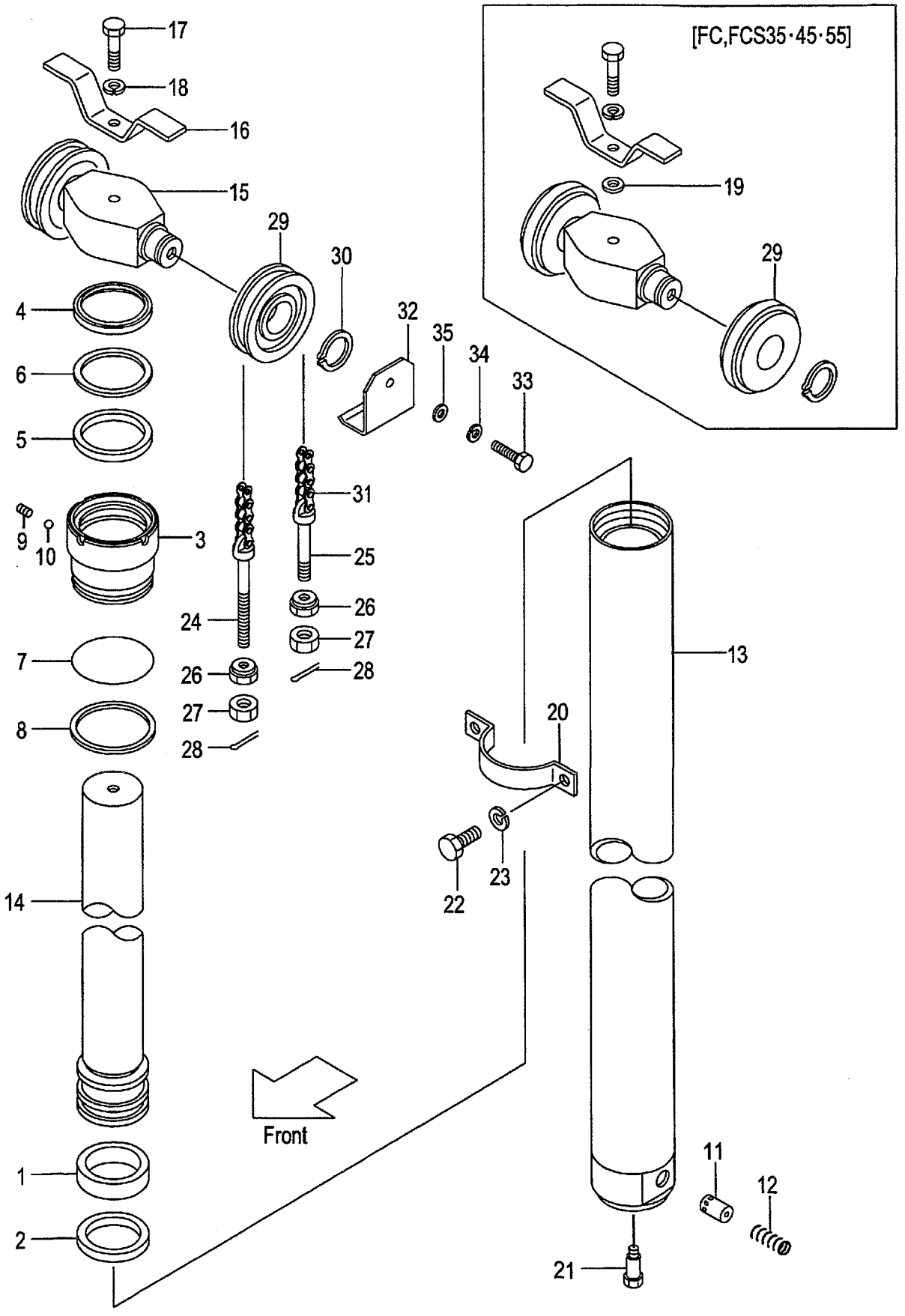

A:VFM39A(2T)
B:VFM39A(2.5T)

FIG.222
(M5020510)

Item No	Part No.	Mark	Description	Req'd	Remarks : Serial No.
-	22679-46111		CHAIN,LEAF VFM400 チェーン	2	
-	22679-46171		CHAIN,LEAF VFM425 チェーン	2	
-	22679-46231		CHAIN,LEAF VFM450 チェーン	2	
-	22679-46311		CHAIN,LEAF VFM475 チェーン	2	
-	22679-46371		CHAIN,LEAF VFM500 チェーン	2	
-	22679-46531		CHAIN,LEAF VFM550 チェーン	2	
-	22679-46651		CHAIN,LEAF VFM600 チェーン	2	
-	09001-10035		CHAIN,ROLLER VFM200 チェーン	2	[FC][FCS35][FCS45][FCS55]
-	09001-10039		CHAIN,ROLLER VFM225 チェーン	2	[FC][FCS35][FCS45][FCS55]
-	09001-10041		CHAIN,ROLLER VFM250 チェーン	2	[FC][FCS35][FCS45][FCS55]
-	09001-10045		CHAIN,ROLLER VFM270 チェーン	2	[FC][FCS35][FCS45][FCS55]
-	09001-10045		CHAIN,ROLLER VFM275 チェーン	2	[FC][FCS35][FCS45][FCS55]
-	09001-10047		CHAIN,ROLLER VFM300 チェーン	2	[FC][FCS35][FCS45][FCS55]
-	09001-10051		CHAIN,ROLLER VFM325 チェーン	2	[FC][FCS35][FCS45][FCS55]
-	09001-10051		CHAIN,ROLLER VFM330 チェーン	2	[FC][FCS35][FCS45][FCS55]
-	09001-10055		CHAIN,ROLLER VFM350 チェーン	2	[FC][FCS35][FCS45][FCS55]
-	09001-10057		CHAIN,ROLLER VFM366 チェーン	2	[FC][FCS35][FCS45][FCS55]
-	09001-10059		CHAIN,ROLLER VFM370 チェーン	2	[FC][FCS35][FCS45][FCS55]
-	09001-10059		CHAIN,ROLLER VFM375 チェーン	2	[FC][FCS35][FCS45][FCS55]
-	09001-10065		CHAIN,ROLLER VFM400 チェーン	2	[FC][FCS35][FCS45][FCS55]
-	09001-10069		CHAIN,ROLLER VFM425 チェーン	2	[FC][FCS35][FCS45][FCS55]
-	09001-10073		CHAIN,ROLLER VFM450 チェーン	2	[FC][FCS35][FCS45][FCS55]
-	09001-10077		CHAIN,ROLLER VFM475 チェーン	2	[FC][FCS35][FCS45][FCS55]
-	09001-10081		CHAIN,ROLLER VFM500 チェーン	2	[FC][FCS35][FCS45][FCS55]
-	09001-10089		CHAIN,ROLLER VFM550 チェーン	2	[FC][FCS35][FCS45][FCS55]
-	09001-10097		CHAIN,ROLLER VFM600 チェーン	2	[FC][FCS35][FCS45][FCS55]
32	534A3-04001		COVER,CHAIN カバー	2	[EXE][EXN]
33	01100-16016		BOLT ボルト	2	[EXE][EXN]
34	02010-00016		WASHER ワッシャ	2	[EXE][EXN]
35	02000-00016		WASHER ワッシャ	2	[EXE][EXN]
K1	277P0-59801		KIT,OVERHAUL オーバホールキット	1	INC.1,2,4-8

FIG.223 LIFT CYLINDER (REAR) [VFM39A]

(M5020520) リフトシリンダ(リヤー)

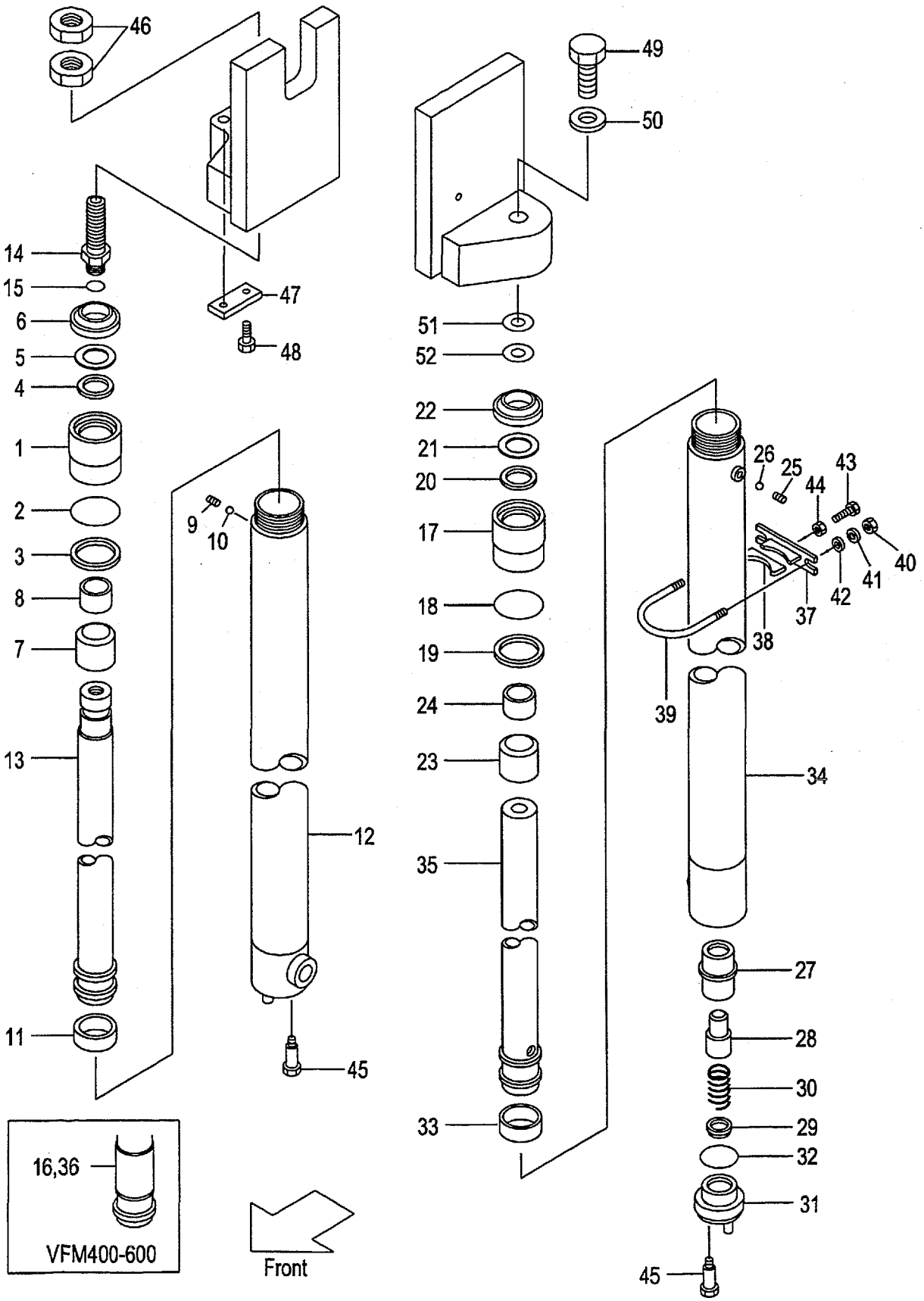

A:VFM39A(2T)
B:VFM39A(2.5T)

FIG.223
(M5020520)

Item No	Part No.	Mark	Description		Req'd	Remarks : Serial No.
A1	234A0-50211		CYL-ASSY,LIFT,RH VFM200	リフトシリンダアッセン	1	INC.1-15
-	234A0-50221		CYL-ASSY,LIFT,RH VFM225	リフトシリンダアッセン	1	INC.1-15
-	234A0-50231		CYL-ASSY,LIFT,RH VFM250	リフトシリンダアッセン	1	INC.1-15
-	234A0-50241		CYL-ASSY,LIFT,RH VFM270	リフトシリンダアッセン	1	INC.1-15
-	234A0-50251		CYL-ASSY,LIFT,RH VFM275	リフトシリンダアッセン	1	INC.1-15
-	234A0-50201		CYL-ASSY,LIFT,RH VFM300	リフトシリンダアッセン	1	INC.1-15
-	234A0-50261		CYL-ASSY,LIFT,RH VFM325	リフトシリンダアッセン	1	INC.1-15
-	234A0-50271		CYL-ASSY,LIFT,RH VFM330	リフトシリンダアッセン	1	INC.1-15
-	234A0-50281		CYL-ASSY,LIFT,RH VFM350	リフトシリンダアッセン	1	INC.1-15
-	234A0-50291		CYL-ASSY,LIFT,RH VFM366	リフトシリンダアッセン	1	INC.1-15
-	234A0-50301		CYL-ASSY,LIFT,RH VFM370	リフトシリンダアッセン	1	INC.1-15
-	234A0-50311		CYL-ASSY,LIFT,RH VFM375	リフトシリンダアッセン	1	INC.1-15
-	234A0-50321		CYL-ASSY,LIFT,RH VFM400	リフトシリンダアッセン	1	INC.1-16
-	234A0-50331		CYL-ASSY,LIFT,RH VFM425	リフトシリンダアッセン	1	INC.1-16
-	234A0-50341		CYL-ASSY,LIFT,RH VFM450	リフトシリンダアッセン	1	INC.1-16
-	234A0-50351		CYL-ASSY,LIFT,RH VFM475	リフトシリンダアッセン	1	INC.1-16
-	234A0-50361		CYL-ASSY,LIFT,RH VFM500	リフトシリンダアッセン	1	INC.1-16
-	234A0-50371		CYL-ASSY,LIFT,RH VFM550	リフトシリンダアッセン	1	INC.1-16
-	234A0-50381		CYL-ASSY,LIFT,RH VFM600	リフトシリンダアッセン	1	INC.1-16
1	234A0-52501		CAP,CYL	キャップ	1	
2	210F8-42631	*	O-RING	Oリング	1	
3	214A0-53681	*	RING,BACK-UP	リング	1	
4	23650-52851	*	U-PACKING	Uパッキング	1	
5	23650-52861	*	RING,BACK-UP	リング	1	
6	27410-53111	*	SEAL,DUST	シール	1	
7	234A0-52511		SLEEVE	スリーブ	1	
8	23650-52841		BUSHING	ブッシング	1	
9	234A0-52611		PLUG	プラグ	1	
10	03190-00006		BALL	ボール	1	
11	22580-53321	*	WEARING	ウエアリング	1	
12	234A0-50711		TUBE,RH VFM200	チューブ	1	

FIG.223 LIFT CYLINDER (REAR) [VFM39A]

(M5020520) リフトシリンダ(リヤー)

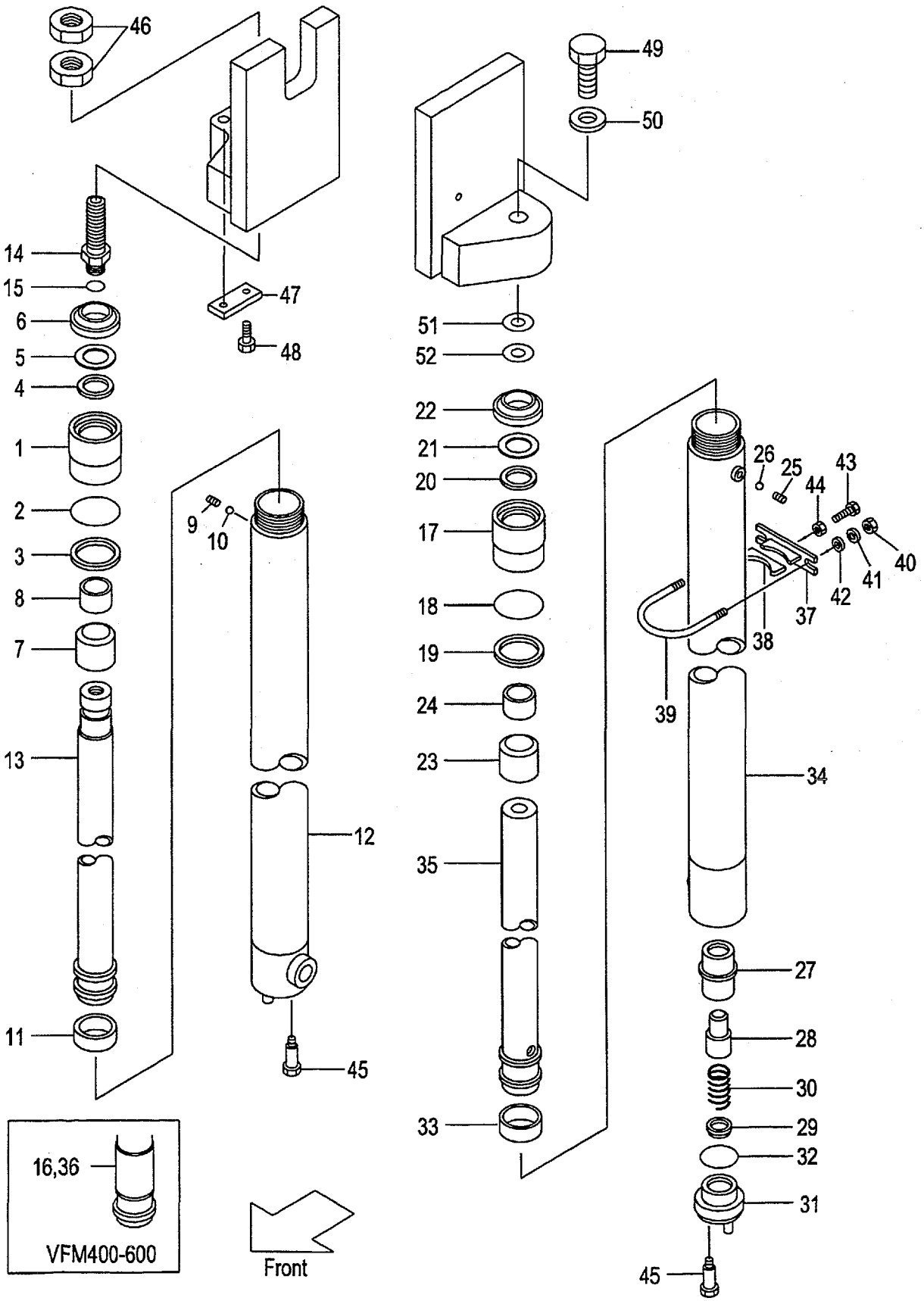

A:VFM39A(2T)
B:VFM39A(2.5T)

FIG.223
(M5020520)

Item No	Part No.	Mark	Description	Req'd	Remarks : Serial No.
-	234A0-50721		TUBE,RH VFM225 ﾁｭｰﾌﾞ	1	
-	234A0-50731		TUBE,RH VFM250 ﾁｭｰﾌﾞ	1	
-	234A0-50741		TUBE,RH VFM270 ﾁｭｰﾌﾞ	1	
-	234A0-50751		TUBE,RH VFM275 ﾁｭｰﾌﾞ	1	
-	234A0-50701		TUBE,RH VFM300 ﾁｭｰﾌﾞ	1	
-	234A0-50761		TUBE,RH VFM325 ﾁｭｰﾌﾞ	1	
-	234A0-50771		TUBE,RH VFM330 ﾁｭｰﾌﾞ	1	
-	234A0-50781		TUBE,RH VFM350 ﾁｭｰﾌﾞ	1	
-	234A0-50791		TUBE,RH VFM366 ﾁｭｰﾌﾞ	1	
-	234A0-50801		TUBE,RH VFM370 ﾁｭｰﾌﾞ	1	
-	234A0-50811		TUBE,RH VFM375 ﾁｭｰﾌﾞ	1	
-	234A0-50821		TUBE,RH VFM400 ﾁｭｰﾌﾞ	1	
-	234A0-50831		TUBE,RH VFM425 ﾁｭｰﾌﾞ	1	
-	234A0-50841		TUBE,RH VFM450 ﾁｭｰﾌﾞ	1	
-	234A0-50851		TUBE,RH VFM475 ﾁｭｰﾌﾞ	1	
-	234A0-50861		TUBE,RH VFM500 ﾁｭｰﾌﾞ	1	
-	234A0-50871		TUBE,RH VFM550 ﾁｭｰﾌﾞ	1	
-	234A0-50881		TUBE,RH VFM600 ﾁｭｰﾌﾞ	1	
13	214A0-51711		ROD,PISTON,RH VFM200 ﾛｯﾄﾞ	1	
-	214A0-51721		ROD,PISTON,RH VFM225 ﾛｯﾄﾞ	1	
-	214A0-51731		ROD,PISTON,RH VFM250 ﾛｯﾄﾞ	1	
-	214A0-51741		ROD,PISTON,RH VFM270 ﾛｯﾄﾞ	1	
-	214A0-51751		ROD,PISTON,RH VFM275 ﾛｯﾄﾞ	1	
-	214A0-51701		ROD,PISTON,RH VFM300 ﾛｯﾄﾞ	1	
-	214A0-51761		ROD,PISTON,RH VFM325 ﾛｯﾄﾞ	1	
-	214A0-51771		ROD,PISTON,RH VFM330 ﾛｯﾄﾞ	1	
-	214A0-51781		ROD,PISTON,RH VFM350 ﾛｯﾄﾞ	1	
-	214A0-51791		ROD,PISTON,RH VFM366 ﾛｯﾄﾞ	1	
-	214A0-51801		ROD,PISTON,RH VFM370 ﾛｯﾄﾞ	1	
-	214A0-51811		ROD,PISTON,RH VFM375 ﾛｯﾄﾞ	1	
-	214A0-51821		ROD,PISTON,RH VFM400 ﾛｯﾄﾞ	1	
-	214A0-51831		ROD,PISTON,RH VFM425 ﾛｯﾄﾞ	1	
-	214A0-51841		ROD,PISTON,RH VFM450 ﾛｯﾄﾞ	1	
-	214A0-51851		ROD,PISTON,RH VFM475 ﾛｯﾄﾞ	1	
-	214A0-51861		ROD,PISTON,RH VFM500 ﾛｯﾄﾞ	1	
-	214A0-51871		ROD,PISTON,RH VFM550 ﾛｯﾄﾞ	1	
-	214A0-51881		ROD,PISTON,RH VFM600 ﾛｯﾄﾞ	1	
14	214A0-53721		NIPPLE ﾆｯﾌﾟﾙ	1	
15	03320-00180	*	O-RING Oﾘﾝｸﾞ	1	
16	214A0-53901		SPACER ｽﾍﾟｰｻ	1	(VFM400-500)
-	214A0-53901		SPACER ｽﾍﾟｰｻ	2	(VFM550-600)
A2	234A0-50011		CYL-ASSY,LIFT,LH VFM200 ﾘﾌﾄｼﾘﾝﾀﾞｱｯｾﾝ	1	INC.17-35
-	234A0-50021		CYL-ASSY,LIFT,LH VFM225 ﾘﾌﾄｼﾘﾝﾀﾞｱｯｾﾝ	1	INC.17-35
-	234A0-50031		CYL-ASSY,LIFT,LH VFM250 ﾘﾌﾄｼﾘﾝﾀﾞｱｯｾﾝ	1	INC.17-35
-	234A0-50041		CYL-ASSY,LIFT,LH VFM270 ﾘﾌﾄｼﾘﾝﾀﾞｱｯｾﾝ	1	INC.17-35

FIG.223 LIFT CYLINDER (REAR) [VFM39A]

(M5020520) リフトシリンダ(リヤー)

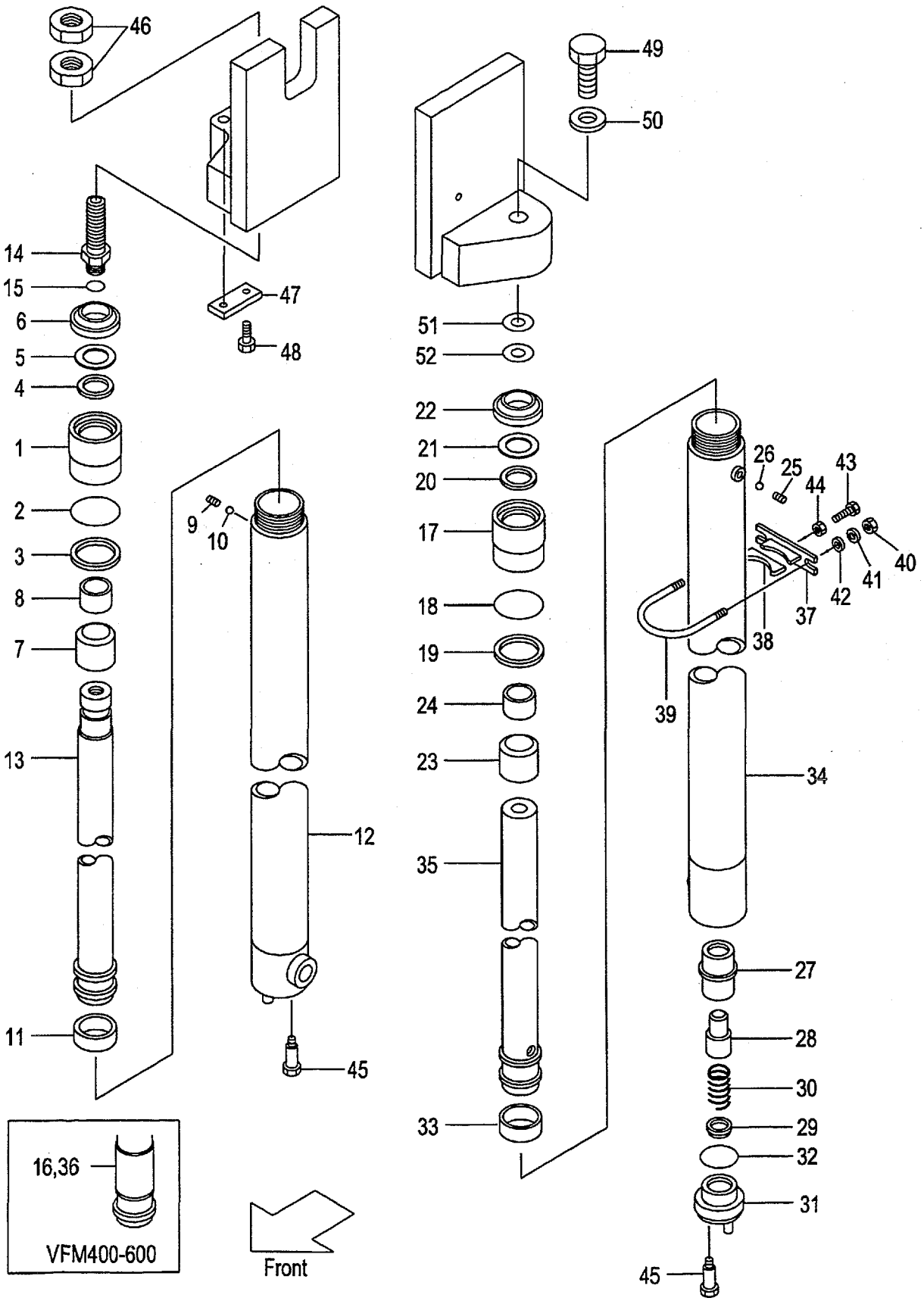

A:VFM39A(2T)
B:VFM39A(2.5T)

FIG.223
(M5020520)

Item No	Part No.	Mark	Description		Req'd	Remarks : Serial No.
-	234A0-50051		CYL-ASSY,LIFT,LH VFM275	リフトシリンダアッセン	1	INC.17-35
-	234A0-50001		CYL-ASSY,LIFT,LH VFM300	リフトシリンダアッセン	1	INC.17-35
-	234A0-50061		CYL-ASSY,LIFT,LH VFM325	リフトシリンダアッセン	1	INC.17-35
-	234A0-50071		CYL-ASSY,LIFT,LH VFM330	リフトシリンダアッセン	1	INC.17-35
-	234A0-50081		CYL-ASSY,LIFT,LH VFM350	リフトシリンダアッセン	1	INC.17-35
-	234A0-50091		CYL-ASSY,LIFT,LH VFM366	リフトシリンダアッセン	1	INC.17-35
-	234A0-50101		CYL-ASSY,LIFT,LH VFM370	リフトシリンダアッセン	1	INC.17-35
-	234A0-50111		CYL-ASSY,LIFT,LH VFM375	リフトシリンダアッセン	1	INC.17-35
-	234A0-50121		CYL-ASSY,LIFT,LH VFM400	リフトシリンダアッセン	1	INC.17-36
-	234A0-50131		CYL-ASSY,LIFT,LH VFM425	リフトシリンダアッセン	1	INC.17-36
-	234A0-50141		CYL-ASSY,LIFT,LH VFM450	リフトシリンダアッセン	1	INC.17-36
-	234A0-50151		CYL-ASSY,LIFT,LH VFM475	リフトシリンダアッセン	1	INC.17-36
-	234A0-50161		CYL-ASSY,LIFT,LH VFM500	リフトシリンダアッセン	1	INC.17-36
-	234A0-50171		CYL-ASSY,LIFT,LH VFM550	リフトシリンダアッセン	1	INC.17-36
-	234A0-50181		CYL-ASSY,LIFT,LH VFM600	リフトシリンダアッセン	1	INC.17-36
17	234A0-52501		CAP,CYL	キャップ	1	
18	210F8-42631	*	O-RING	Oリング	1	
19	214A0-53681	*	RING,BACK-UP	リング	1	
20	23650-52851	*	U-PACKING	Uパッキング	1	
21	23650-52861	*	RING,BACK-UP	リング	1	
22	27410-53111	*	SEAL,DUST	シール	1	
23	234A0-52511		SLEEVE	スリーブ	1	
24	23650-52841		BUSHING	ブッシング	1	
25	234A0-52611		PLUG	プラグ	1	
26	03190-00006		BALL	ボール	1	
27	53658-43021		SLEEVE	スリーブ	1	
28	53658-43011		PISTON	ピストン	1	
29	53658-43001		CHECK	チェック	1	
30	53658-43031		SPRING	スプリング	1	
31	53658-43041		PLUG	プラグ	1	
32	03320-00340	*	O-RING	Oリング	1	
33	22580-53321	*	WEARING	ウエアリング	1	
34	234A0-50511		TUBE,LH VFM200	チューブ	1	
-	234A0-50521		TUBE,LH VFM225	チューブ	1	
-	234A0-50531		TUBE,LH VFM250	チューブ	1	

FIG.223 LIFT CYLINDER (REAR) [VFM39A]

(M5020520) リフトシリンダ(リヤー)

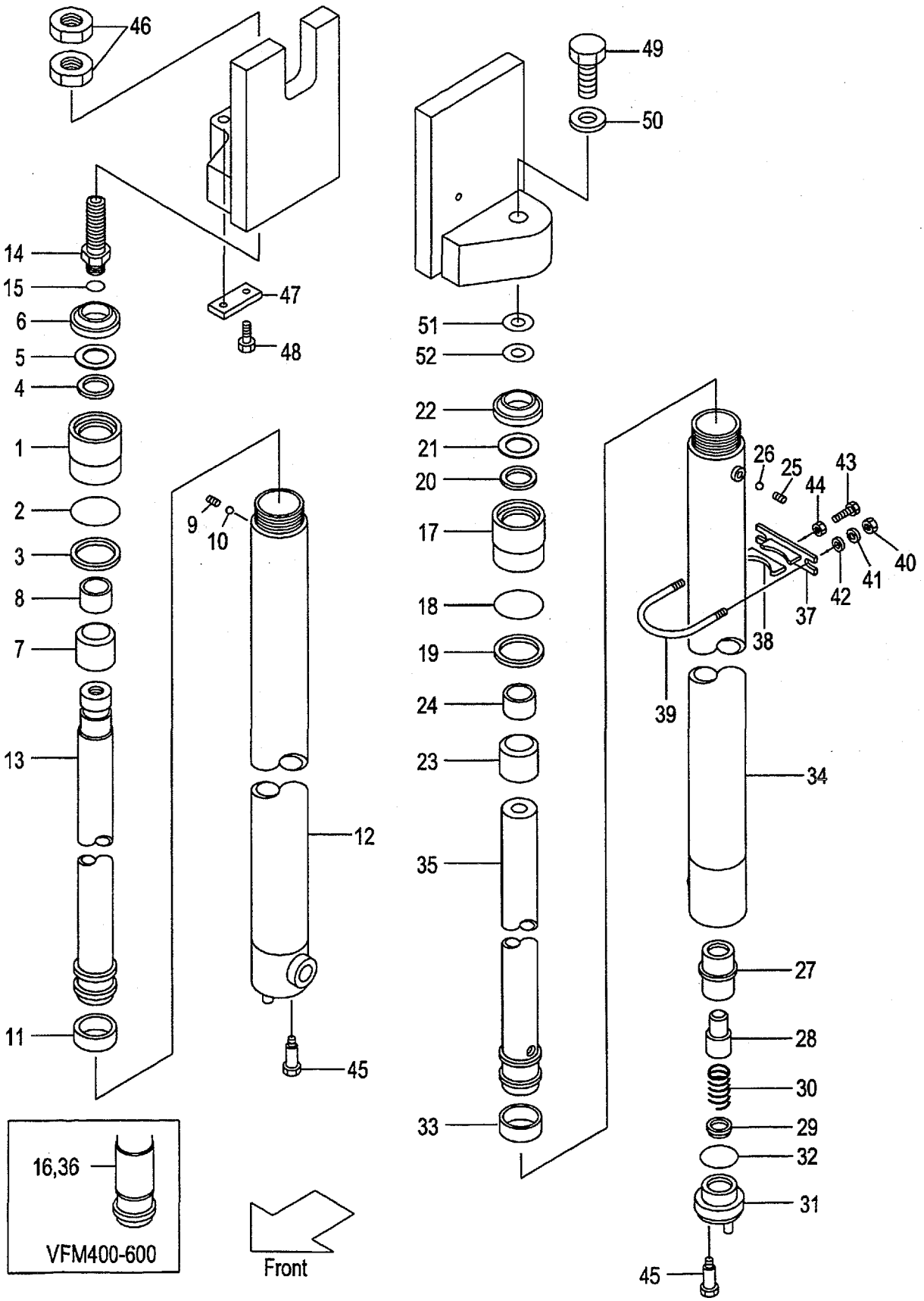

A:VFM39A(2T)
B:VFM39A(2.5T)

FIG.223
(M5020520)

Item No	Part No.	Mark	Description		Req'd	Remarks : Serial No.
-	234A0-50541		TUBE,LH VFM270	ﾁｭｰﾌﾞ	1	
-	234A0-50551		TUBE,LH VFM275	ﾁｭｰﾌﾞ	1	
-	234A0-50501		TUBE,LH VFM300	ﾁｭｰﾌﾞ	1	
-	234A0-50561		TUBE,LH VFM325	ﾁｭｰﾌﾞ	1	
-	234A0-50571		TUBE,LH VFM330	ﾁｭｰﾌﾞ	1	
-	234A0-50581		TUBE,LH VFM350	ﾁｭｰﾌﾞ	1	
-	234A0-50591		TUBE,LH VFM366	ﾁｭｰﾌﾞ	1	
-	234A0-50601		TUBE,LH VFM370	ﾁｭｰﾌﾞ	1	
-	234A0-50611		TUBE,LH VFM375	ﾁｭｰﾌﾞ	1	
-	234A0-50621		TUBE,LH VFM400	ﾁｭｰﾌﾞ	1	
-	234A0-50631		TUBE,LH VFM425	ﾁｭｰﾌﾞ	1	
-	234A0-50641		TUBE,LH VFM450	ﾁｭｰﾌﾞ	1	
-	234A0-50651		TUBE,LH VFM475	ﾁｭｰﾌﾞ	1	
-	234A0-50661		TUBE,LH VFM500	ﾁｭｰﾌﾞ	1	
-	234A0-50671		TUBE,LH VFM550	ﾁｭｰﾌﾞ	1	
-	234A0-50681		TUBE,LH VFM600	ﾁｭｰﾌﾞ	1	
35	229F0-51211		ROD,PISTON,LH VFM200	ﾛｯﾄﾞ	1	
-	229F0-51221		ROD,PISTON,LH VFM225	ﾛｯﾄﾞ	1	
-	229F0-51231		ROD,PISTON,LH VFM250	ﾛｯﾄﾞ	1	
-	229F0-51241		ROD,PISTON,LH VFM270	ﾛｯﾄﾞ	1	
-	229F0-51251		ROD,PISTON,LH VFM275	ﾛｯﾄﾞ	1	
-	229F0-51201		ROD,PISTON,LH VFM300	ﾛｯﾄﾞ	1	
-	229F0-51261		ROD,PISTON,LH VFM325	ﾛｯﾄﾞ	1	
-	229F0-51271		ROD,PISTON,LH VFM330	ﾛｯﾄﾞ	1	
-	229F0-51281		ROD,PISTON,LH VFM350	ﾛｯﾄﾞ	1	
-	229F0-51291		ROD,PISTON,LH VFM366	ﾛｯﾄﾞ	1	
-	229F0-51301		ROD,PISTON,LH VFM370	ﾛｯﾄﾞ	1	
-	229F0-51311		ROD,PISTON,LH VFM375	ﾛｯﾄﾞ	1	
-	229F0-51321		ROD,PISTON,LH VFM400	ﾛｯﾄﾞ	1	
-	229F0-51331		ROD,PISTON,LH VFM425	ﾛｯﾄﾞ	1	
-	229F0-51341		ROD,PISTON,LH VFM450	ﾛｯﾄﾞ	1	
-	229F0-51351		ROD,PISTON,LH VFM475	ﾛｯﾄﾞ	1	
-	229F0-51361		ROD,PISTON,LH VFM500	ﾛｯﾄﾞ	1	
-	229F0-51371		ROD,PISTON,LH VFM550	ﾛｯﾄﾞ	1	
-	229F0-51381		ROD,PISTON,LH VFM600	ﾛｯﾄﾞ	1	
36	214A0-53901		SPACER	ｽﾍﾟｰｻ	1	(VFM400-500)
-	214A0-53901		SPACER	ｽﾍﾟｰｻ	2	(VFM550-600)
A3	215E8-42171		SUPPORT-ASSY	ｻﾎﾟｰﾄｱｯｾﾝ	2	INC.37,38
37	215E8-72181		SUPPORT	ｻﾎﾟｰﾄ	1	
38	24868-42111		RUBBER	ﾗﾊﾞｰ	1	
39	234A8-42551		U-BOLT	Uﾎﾞﾙﾄ	2	
40	234A8-42561		NUT	ﾅｯﾄ	4	
41	02010-20010		WASHER	ﾜｯｼｬ	4	
42	02000-20010		WASHER	ﾜｯｼｬ	4	
43	232A8-42201		BOLT	ﾎﾞﾙﾄ	2	
44	234A8-42571		NUT	ﾅｯﾄ	2	
45	214A8-42661		BOLT	ﾎﾞﾙﾄ	2	
46	24320-52001		NUT,RH	ﾅｯﾄ	2	
47	23648-50161		PLATE,KEY,RH	ﾌﾟﾚｰﾄ	1	
48	01184-10020		BOLT,RH	ﾎﾞﾙﾄ	2	

FIG.223 LIFT CYLINDER (REAR) [VFM39A]

(M5020520) リフトシリンダ(リヤー)

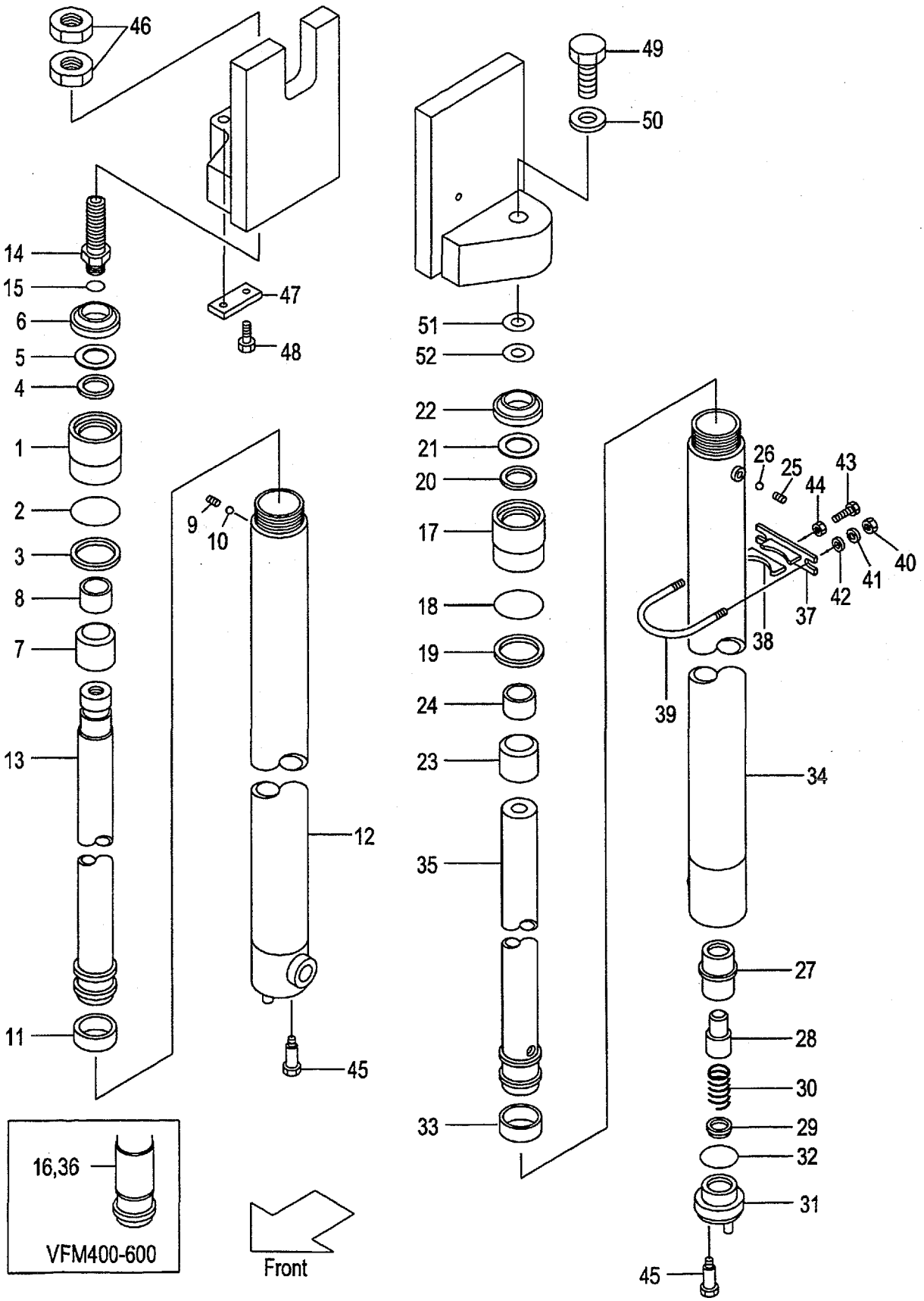

A:VFM39A(2T)
B:VFM39A(2.5T)

FIG.223
(M5020520)

Item No	Part No.	Mark	Description		Req'd	Remarks : Serial No.
49	01103-14040		BOLT,LH	ﾎﾞﾙﾄ	1	
50	02011-00014		WASHER,LH	ﾜｯｼｬ	1	
51	23917-42191		SHIM,T-1.0,LH	ｼﾑ	5	
52	22679-43831		SHIM,T-0.2,LH	ｼﾑ	5	
K1	214A0-59821		KIT,OVERHAUL	ｵｰﾊﾞｰﾎｰﾙｷｯﾄ	1	INC.2-6,11,15,18-22,32,33

FIG.224 MAST PIPING [VFM39A]

(M5020530) ﾏｽﾄﾊﾟｲﾋﾟﾝｸﾞ

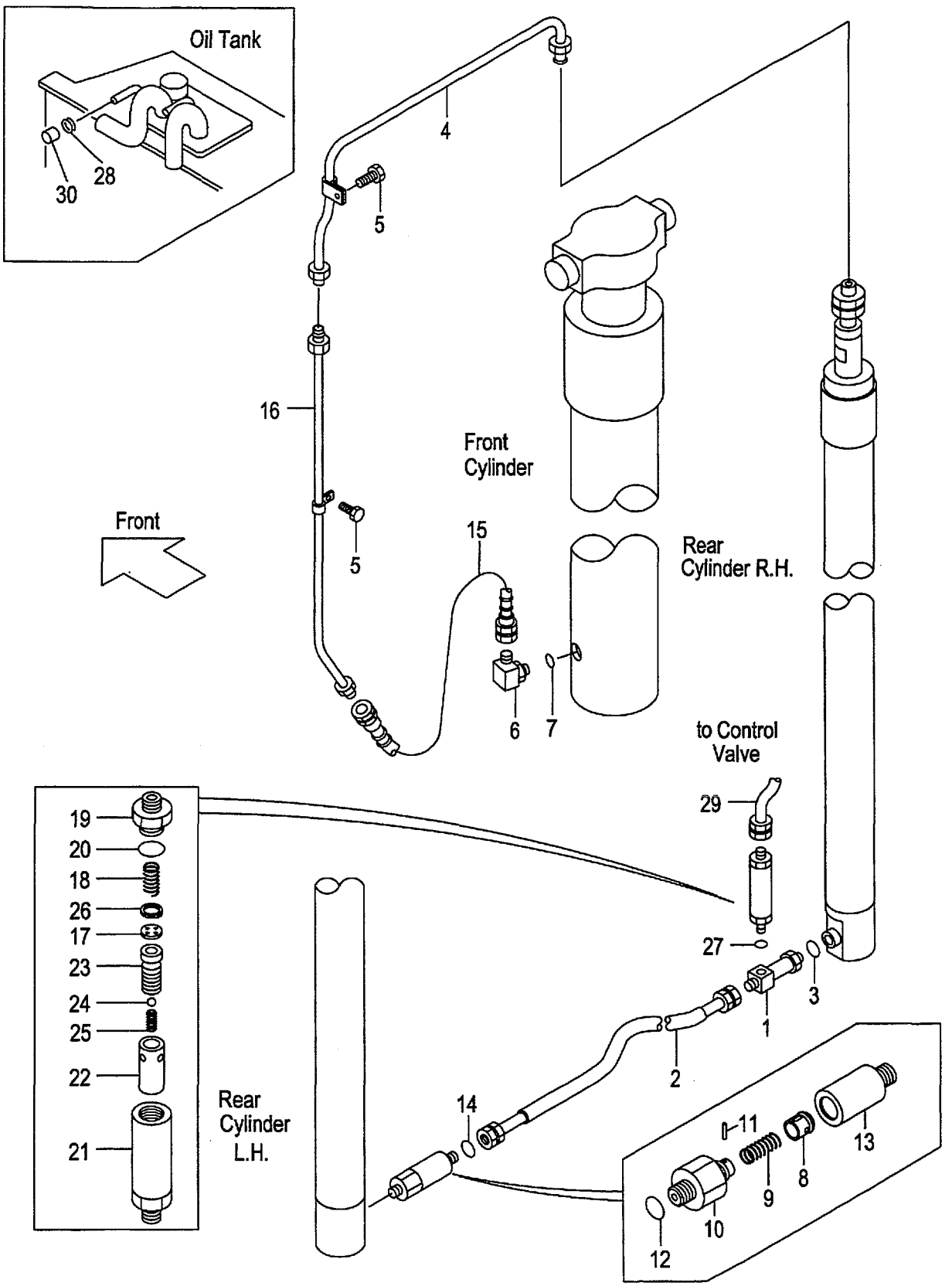

A:VFM39A(2T)
B:VFM39A(2.5T)

FIG.224
(M5020530)

Item No	Part No.	Mark	Description		Req'd	Remarks : Serial No.
A1	234A8-41101		THREE-WAY-ASSY	ｽﾘｰｳｪｲｱｯｾﾝ	1	INC.1,3
1	NO PART NO.	#	THREE-WAY	ｽﾘｰｳｴｲ	1	
2	277T0-62071		HOSE	ﾎｰｽ	1	
3	03320-00140		O-RING	Oﾘﾝｸﾞ	1	
4	232A0-62001		PIPE	ﾊﾟｲﾌﾟ	1	
5	01183-06016		BOLT	ﾎﾞﾙﾄ	2	
A2	229F0-91001		ELBOW-ASSY	ｴﾙﾎﾞｱｯｾﾝ	1	INC.6,7
6	NO PART NO.	#	ELBOW	ｴﾙﾎﾞ	1	
7	03320-00240		O-RING	Oﾘﾝｸﾞ	1	
A3	234A0-62051		VALVE-ASSY,CUT	ｶｯﾄﾊﾞﾙﾌﾞｱｯｾﾝ	1	INC.8-14
A4	234A8-40701		VALVE-SUB-ASSY,CUT	ｶｯﾄﾊﾞﾙﾌﾞｻﾌﾞｱｯｾﾝ	1	INC.8-12
8	234A8-42602		PISTON	ﾋﾟｽﾄﾝ	1	
9	234A8-42611		SPRING	ｽﾌﾟﾘﾝｸﾞ	1	
10	234A8-42622		NIPPLE	ﾆｯﾌﾟﾙ	1	
11	02270-01014		PIN	ﾋﾟﾝ	1	
12	03320-00140		O-RING	Oﾘﾝｸﾞ	1	
13	234A0-62111		ADAPTER	ｱﾀﾞﾌﾟﾀ	1	
14	03320-00140		O-RING	Oﾘﾝｸﾞ	1	
15	214A0-62151		HOSE	ﾎｰｽ	1	
16	277P0-60301		PIPE VFM200	ﾊﾟｲﾌﾟ	1	
-	277P0-60311		PIPE VFM225	ﾊﾟｲﾌﾟ	1	
-	277P0-60321		PIPE VFM250	ﾊﾟｲﾌﾟ	1	
-	277P0-60331		PIPE VFM270	ﾊﾟｲﾌﾟ	1	
-	277P0-60341		PIPE VFM275	ﾊﾟｲﾌﾟ	1	
-	277P0-60351		PIPE VFM300	ﾊﾟｲﾌﾟ	1	
-	277P0-60361		PIPE VFM325	ﾊﾟｲﾌﾟ	1	
-	277P0-60371		PIPE VFM330	ﾊﾟｲﾌﾟ	1	
-	277P0-60381		PIPE VFM350	ﾊﾟｲﾌﾟ	1	
-	277P0-60391		PIPE VFM366	ﾊﾟｲﾌﾟ	1	
-	277P0-60401		PIPE VFM370	ﾊﾟｲﾌﾟ	1	
-	277P0-60411		PIPE VFM375	ﾊﾟｲﾌﾟ	1	
-	277P0-60421		PIPE VFM400	ﾊﾟｲﾌﾟ	1	
-	277P0-60431		PIPE VFM425	ﾊﾟｲﾌﾟ	1	
-	277P0-60441		PIPE VFM450	ﾊﾟｲﾌﾟ	1	
-	277P0-60451		PIPE VFM475	ﾊﾟｲﾌﾟ	1	
-	277P0-60461		PIPE VFM500	ﾊﾟｲﾌﾟ	1	
-	277P0-60471		PIPE VFM550	ﾊﾟｲﾌﾟ	1	
-	277P0-60481		PIPE VFM600	ﾊﾟｲﾌﾟ	1	
A5	234A8-41001		REGULATOR-ASSY	ﾚｷﾞｭﾚｰﾀｱｯｾﾝ	1	INC.17-26
17	NO PART NO.	#	PLATE	ﾌﾟﾚｰﾄ	1	
18	27979-43101		SPRING	ｽﾌﾟﾘﾝｸﾞ	1	
19	NO PART NO.	#	NIPPLE	ﾆｯﾌﾟﾙ	1	
20	03320-00280		O-RING	Oﾘﾝｸﾞ	1	
21	NO PART NO.	#	CASE	ｹｰｽ	1	
22	NO PART NO.	#	SLEEVE	ｽﾘｰﾌﾞ	1	
23	NO PART NO.	#	PISTON	ﾋﾟｽﾄﾝ	1	
24	24459-42951		BALL	ﾎﾞｰﾙ	1	
25	214A8-44151		SPRING	ｽﾌﾟﾘﾝｸﾞ	1	
26	02110-00018		RING,SNAP	ｽﾅｯﾌﾟﾘﾝｸﾞ	1	
27	03320-00180		O-RING	Oﾘﾝｸﾞ	1	

FIG.224 MAST PIPING [VFM39A]

(M5020530) ﾏｽﾄﾊﾟｲﾋﾟﾝｸﾞ

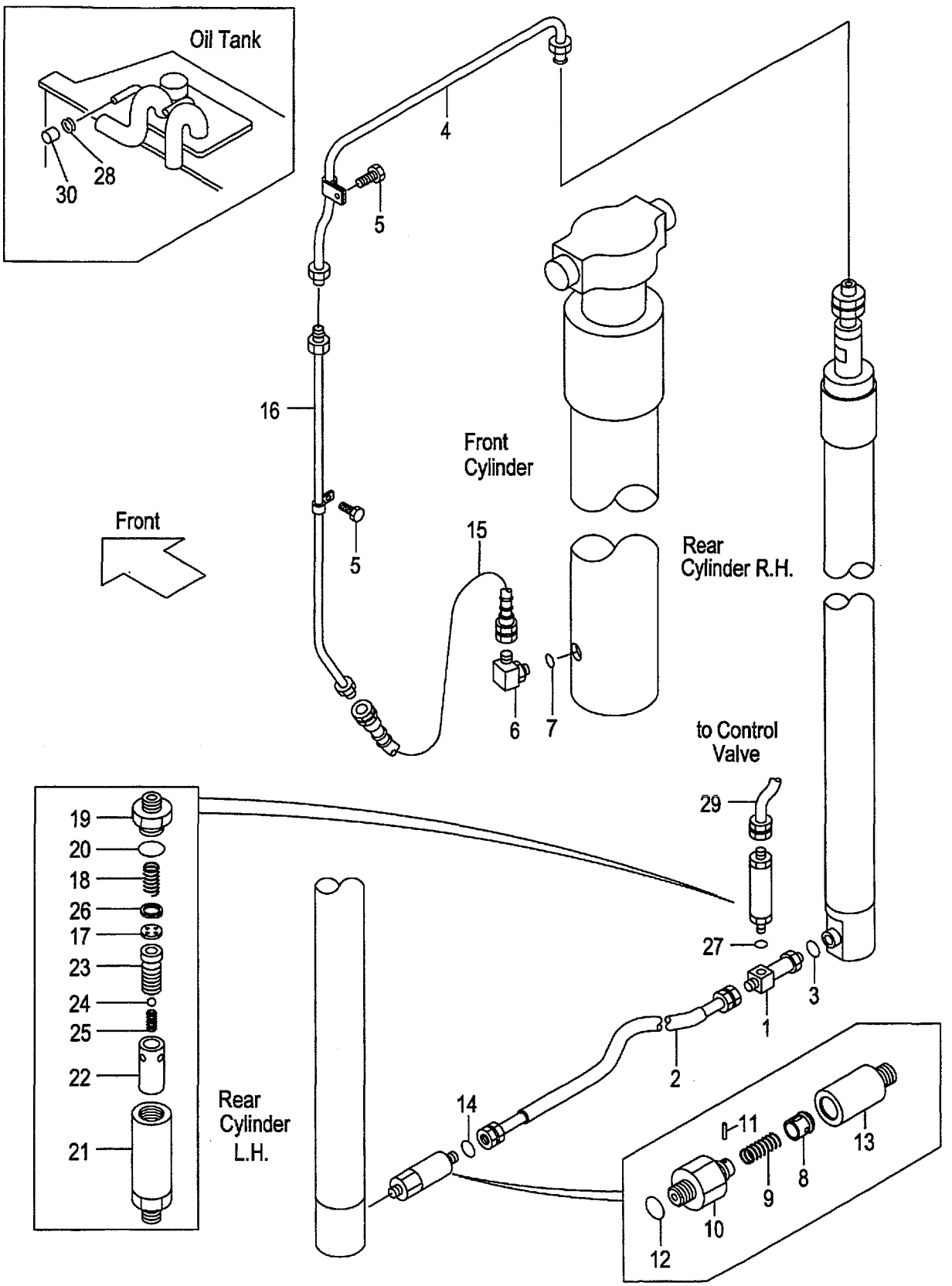

FIG.224

(M5020530)

A:VFM39A(2T)
B:VFM39A(2.5T)

Item No	Part No.	Mark	Description	Req'd	Remarks : Serial No.
28	04914-00019		CLIP クリップ	1	
29	239A8-42001		HOSE ホース	1	
30	55593-62551		CAP キャップ	1	

FIG.225 FORK[VFHM39A]

(M5028150) フォーク

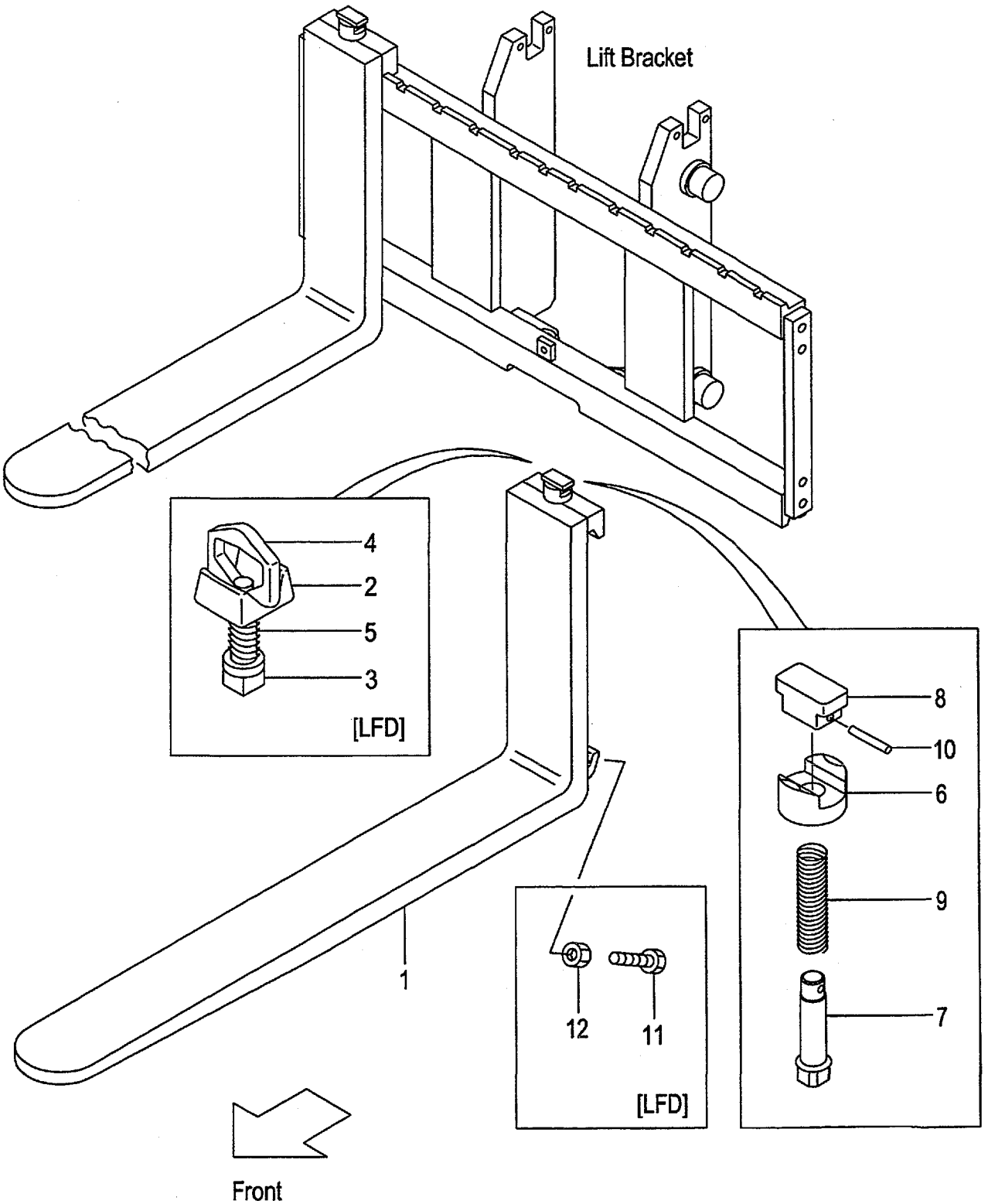

A:VFHM39A(2T)
B:VFHM39A(2.5T)

Item No	Part No.	Mark	Description		Req'd	Remarks : Serial No.
1	231A8-10101		FORK	ﾌｫｰｸ	2	A (L=920) INC.6-10
-	214A8-10512		FORK	ﾌｫｰｸ	2	B (L=1070) INC.6-10
-	214A8-10512		FORK	ﾌｫｰｸ	2	[EX] INC.6-10
-	231A8-10171		FORK	ﾌｫｰｸ	2	A [LF090] INC.6-10
-	231F8-10571		FORK	ﾌｫｰｸ	2	B [LF090] INC.6-10
-	231A8-10101		FORK	ﾌｫｰｸ	2	A [LF092] INC.6-10
-	231F8-10501		FORK	ﾌｫｰｸ	2	B [LF092] INC.6-10
-	214A8-10582		FORK	ﾌｫｰｸ	2	[LF100] INC.6-10
-	214A8-10512		FORK	ﾌｫｰｸ	2	[LF107] INC.6-10
-	214A8-10592		FORK	ﾌｫｰｸ	2	[LF110] INC.6-10
-	214A8-10602		FORK	ﾌｫｰｸ	2	[LF120] INC.6-10
-	214A8-10522		FORK	ﾌｫｰｸ	2	[LF122] INC.6-10
-	214A8-10612		FORK	ﾌｫｰｸ	2	[LF130] INC.6-10
-	214A8-10532		FORK	ﾌｫｰｸ	2	[LF137] INC.6-10
-	214A8-10622		FORK	ﾌｫｰｸ	2	[LF140] INC.6-10
-	214A8-10632		FORK	ﾌｫｰｸ	2	[LF150] INC.6-10
-	214A8-10542		FORK	ﾌｫｰｸ	2	[LF152] INC.6-10
-	214A8-10642		FORK	ﾌｫｰｸ	2	[LF160] INC.6-10
-	214A8-10552		FORK	ﾌｫｰｸ	2	[LF167] INC.6-10
-	214A8-10653		FORK	ﾌｫｰｸ	2	[LF170] INC.6-10
-	214A8-10663		FORK	ﾌｫｰｸ	2	[LF180] INC.6-10
-	214A8-10563		FORK	ﾌｫｰｸ	2	[LF182] INC.6-10
-	214A8-10673		FORK	ﾌｫｰｸ	2	[LF190] INC.6-10
-	214A8-10683		FORK	ﾌｫｰｸ	2	[LF200] INC.6-10
-	234A8-10571		FORK	ﾌｫｰｸ	2	[LFD090] INC.2-5
-	234A8-10501		FORK	ﾌｫｰｸ	2	[LFD092] INC.2-5
-	234A8-10581		FORK	ﾌｫｰｸ	2	[LFD100] INC.2-5
-	234A8-10511		FORK	ﾌｫｰｸ	2	[LFD107] INC.2-5
-	234A8-10591		FORK	ﾌｫｰｸ	2	[LFD110] INC.2-5
-	234A8-10601		FORK	ﾌｫｰｸ	2	[LFD120] INC.2-5
-	234A8-10521		FORK	ﾌｫｰｸ	2	[LFD122] INC.2-5
-	234A8-10611		FORK	ﾌｫｰｸ	2	[LFD130] INC.2-5
-	234A8-10531		FORK	ﾌｫｰｸ	2	[LFD137] INC.2-5
-	234A8-10621		FORK	ﾌｫｰｸ	2	[LFD140] INC.2-5
-	234A8-10631		FORK	ﾌｫｰｸ	2	[LFD150] INC.2-5
-	234A8-10541		FORK	ﾌｫｰｸ	2	[LFD152] INC.2-5
-	234A8-10641		FORK	ﾌｫｰｸ	2	[LFD160] INC.2-5
-	234A8-10551		FORK	ﾌｫｰｸ	2	[LFD167] INC.2-5
-	234A8-10652		FORK	ﾌｫｰｸ	2	[LFD170] INC.2-5
-	234A8-10662		FORK	ﾌｫｰｸ	2	[LFD180] INC.2-5
-	234A8-10562		FORK	ﾌｫｰｸ	2	[LFD182] INC.2-5
-	234A8-10672		FORK	ﾌｫｰｸ	2	[LFD190] INC.2-5
-	234A8-10682		FORK	ﾌｫｰｸ	2	[LFD200] INC.2-5
A1	214A8-11001		STOPPER-ASSY,FORK	ｽﾄｯﾊﾟｱｯｾﾝ	2	[LFD] INC.2-5

FIG.225 FORK[VFHM39A]

(M5028150) フォーク

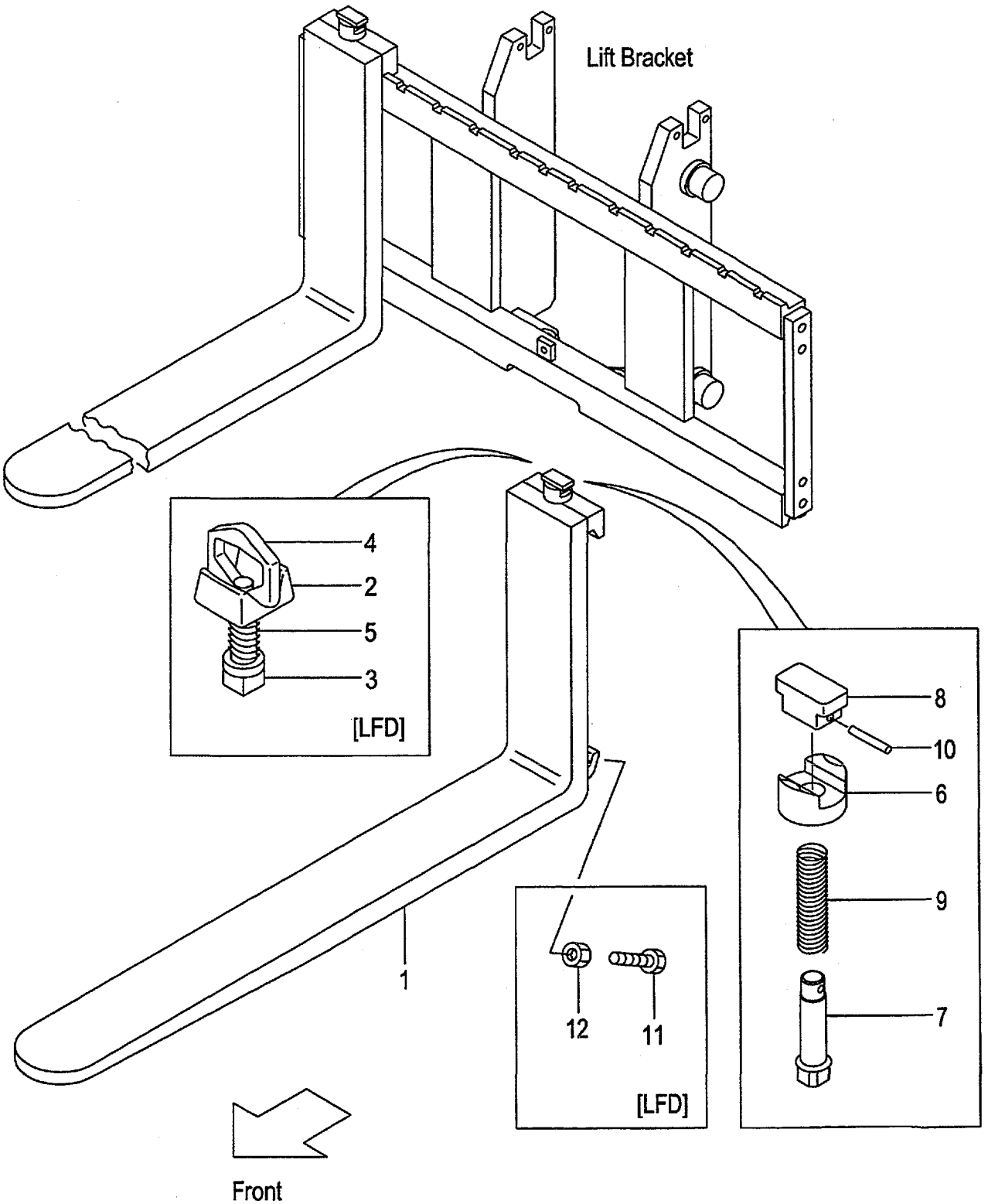

A:VFHM39A(2T)
B:VFHM39A(2.5T)

FIG.225
(M5028150)

Item No	Part No.	Mark	Description		Req'd	Remarks : Serial No.
2	214A8-12001		HEAD	ﾍｯﾄﾞ	2	[LFD]
3	214A8-12011		STOPPER	ｽﾄｯﾊﾟ	2	[LFD]
4	214A8-12021		HANDLE	ﾊﾝﾄﾞﾙ	2	[LFD]
5	214A8-12031		SPRING	ｽﾌﾟﾘﾝｸﾞ	2	[LFD]
6	216G8-12921		HOLDER	ﾎﾙﾀﾞ	2	[LF]
7	231A8-12001		PIN	ﾋﾟﾝ	2	[LF]
8	231A8-12011		KNOB	ﾉﾌﾞ	2	[LF]
9	231A8-12021		SPRING	ｽﾌﾟﾘﾝｸﾞ	2	[LF]
10	231A8-12031		PIN,SPRING	ﾋﾟﾝ	2	[LF]
11	216G8-12101		BOLT	ﾎﾞﾙﾄ	4	[LFD]
12	01402-00010		NUT	ﾅｯﾄ	4	[LFD]

FIG.226 LIFT BRACKET[VFHM39A]

(M5020910) ﾘﾌﾄﾌﾞﾗｹｯﾄ

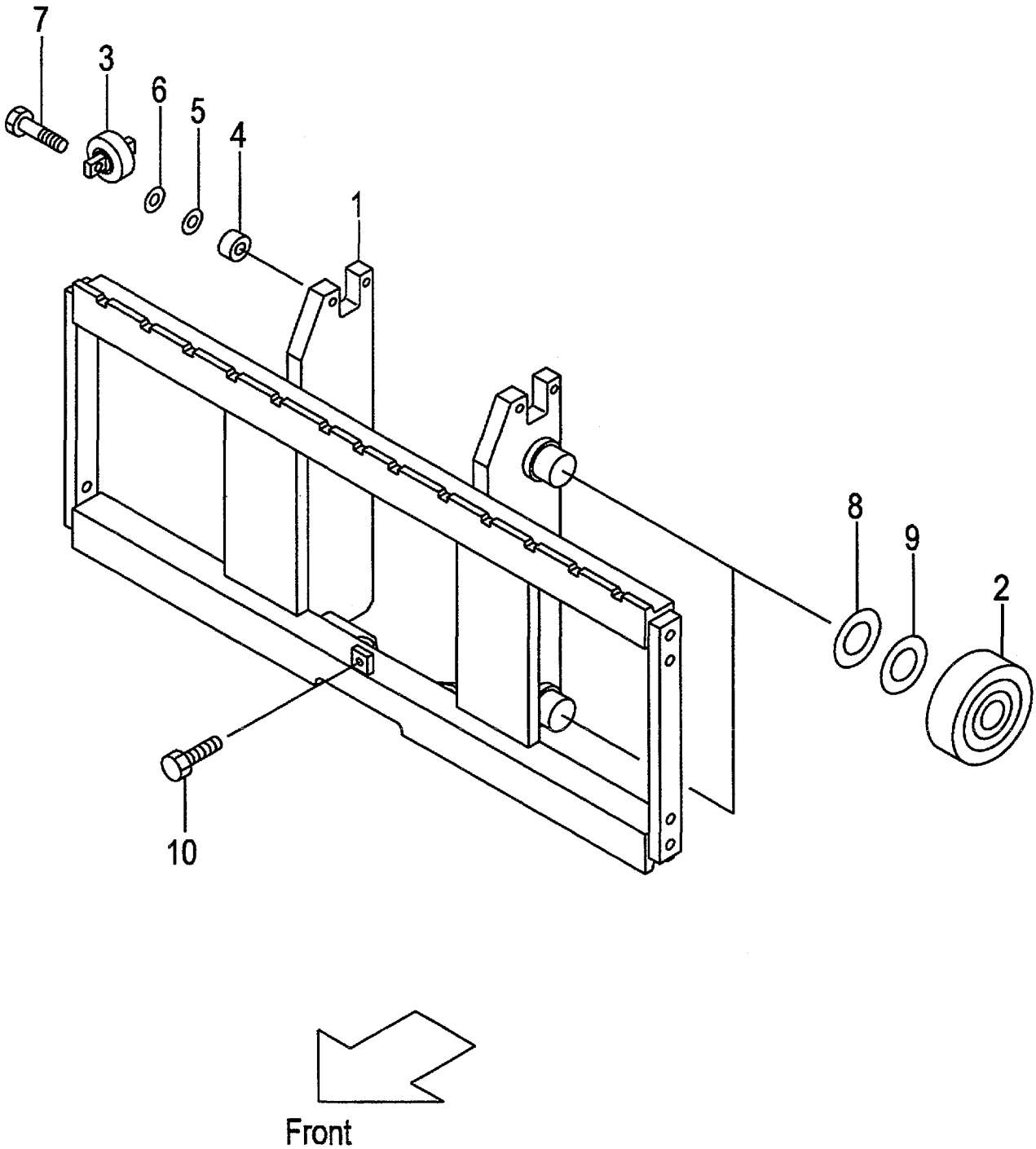

A:VFHM39A(2T)
B:VFHM39A(2.5T)

FIG.226
(M5020910)

Item No	Part No.	Mark	Description		Req'd	Remarks : Serial No.
1	239A0-90101		BRACKET,LIFT	ﾌﾞﾗｹｯﾄ	1	
-	539A1-64201		BRACKET,LIFT	ﾌﾞﾗｹｯﾄ	1	[WFY110][WFY114][WFY127] [WFY135][WFY138]
-	539A1-64211		BRACKET,LIFT(L)	ﾌﾞﾗｹｯﾄ	1	[WFY135][WFY138][WFY145] [WFY146][WFY154][WFY180]
2	277P8-22051		ROLLER,END	ﾛｰﾗ	4	
-	277P8-22061		ROLLER,END	ﾛｰﾗ	(4)	
-	577P3-74001		ROLLER,END	ﾛｰﾗ	4	[FC][CS35][FCS35][FCS45] [FCS55]
-	577P3-74011		ROLLER,END	ﾛｰﾗ	(4)	[FC][CS35][FCS35][FCS45] [FCS55]
3	23458-32052		ROLLER,SIDE	ﾛｰﾗ	2	
-	514A3-71702		ROLLER,SIDE	ﾛｰﾗ	2	[FC][CS35][FCS35][FCS45] [FCS55]
4	22548-34031		SPACER	ｽﾍﾟｰｻ	4	
5	22548-34051		SHIM,T-0.5	ｼﾑ	5	
6	22548-34061		SHIM,T-1.0	ｼﾑ	5	
7	01184-12040		BOLT & WASHER	ﾎﾞﾙﾄ&ﾜｯｼｬ	4	
8	277P8-22071		SHIM,T-0.5	ｼﾑ	10	
9	277P8-22081		SHIM,T-1.0	ｼﾑ	10	
10	01184-12025		BOLT & WASHER	ﾎﾞﾙﾄ&ﾜｯｼｬ	1	
11	214A0-93001	+	CHART,CAPACITY	ﾁｬｰﾄ	1	A (VFHM360-500)
-	214A0-93011	+	CHART,CAPACITY	ﾁｬｰﾄ	1	A (VFHM540-750)
-	214A0-93101	+	CHART,CAPACITY	ﾁｬｰﾄ	1	B (VFHM360-500)
-	214A0-93111	+	CHART,CAPACITY	ﾁｬｰﾄ	1	B (VFHM540-750)
-	214A0-93031	+	CHART,CAPACITY	ﾁｬｰﾄ	1	A [VFHM360-500/EXA]
-	214A0-93041	+	CHART,CAPACITY	ﾁｬｰﾄ	1	A [VFHM540-750/EXA]
-	214A0-93131	+	CHART,CAPACITY	ﾁｬｰﾄ	1	B [VFHM360-500/EXA]
-	214A0-93141	+	CHART,CAPACITY	ﾁｬｰﾄ	1	B [VFHM540-750/EXA]
-	514A3-82301	+	CHART,CAPACITY	ﾁｬｰﾄ	1	[EXB][EXC][EXE][EXN]
-	514A3-82321	+	CHART,CAPACITY	ﾁｬｰﾄ	1	[EXD]
-	524T3-84031	+	CHART,CAPACITY	ﾁｬｰﾄ	1	[EXR]
-	63110-18921	+	CHART,CAPACITY	ﾁｬｰﾄ	1	[EXB/CNP]
-	514A3-82341	+	CHART,CAPACITY	ﾁｬｰﾄ	1	[EXB/FNP][EXE/FNP]
-	514A3-82331	+	CHART,CAPACITY	ﾁｬｰﾄ	1	[EXB/SNP][EXE/SNP]
-	514A3-82361	+	CHART,CAPACITY	ﾁｬｰﾄ	1	[EXEEC/DNP][EXNEC/DNP]
-	514A3-82381	+	CHART,CAPACITY	ﾁｬｰﾄ	1	[EXEEC/GNP]
-	514A3-82371	+	CHART,CAPACITY	ﾁｬｰﾄ	1	[EXEEC/INP]
-	514A3-82351	+	CHART,CAPACITY	ﾁｬｰﾄ	1	[EXEEC/ONP]
-	514A3-82391	+	CHART,CAPACITY	ﾁｬｰﾄ	1	[EXEEC/PNP]
-	529F3-82101	+	CHART,CAPACITY	ﾁｬｰﾄ	1	[EXNEC/FINP]
-	529F3-82111	+	CHART,CAPACITY	ﾁｬｰﾄ	1	[EXNEC/SENP]

FIG.226 LIFT BRACKET[VFHM39A]

(M5020910) ﾘﾌﾄﾌﾞﾗｹｯﾄ

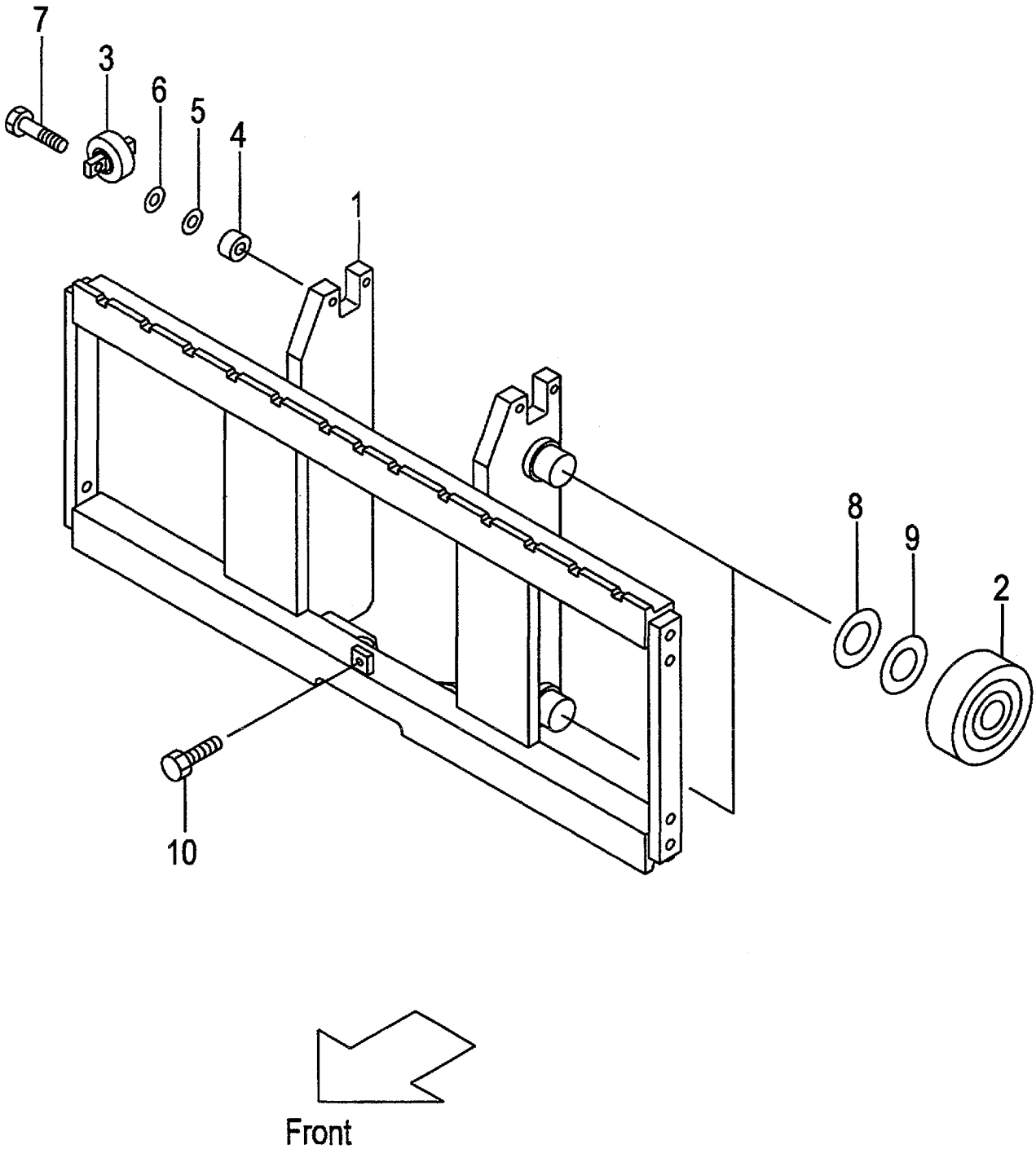

A:VFHM39A(2T)
B:VFHM39A(2.5T)

FIG.226
(M5020910)

Item No	Part No.	Mark	Description	Req'd	Remarks : Serial No.
12	02432-01008	+	RIVET リベット	4	

FIG.227 BACKREST[VFHM91A]

(M5028270) ﾊﾞｯｸﾚｽﾄ

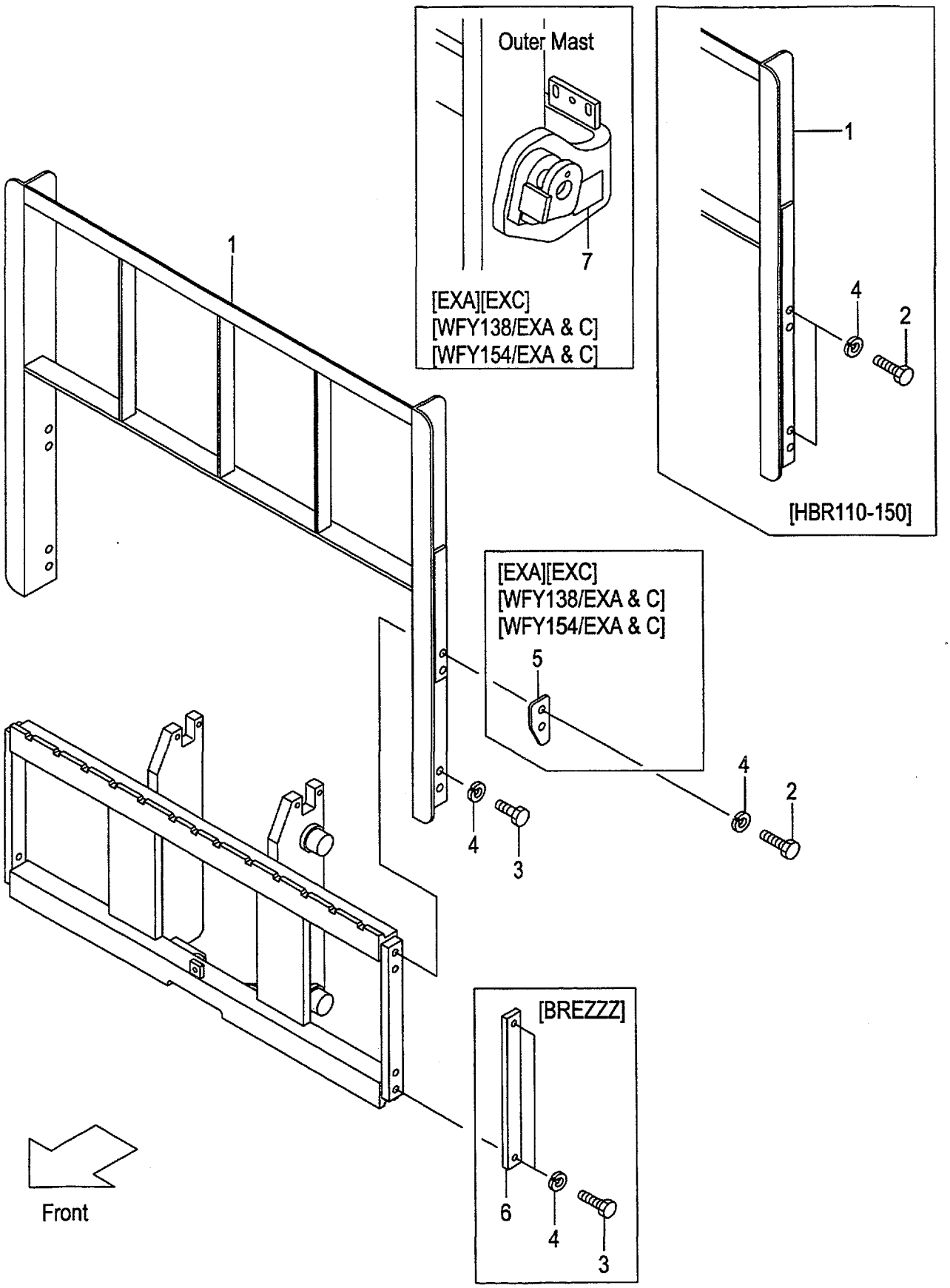

A:VFHM39A(2T)
B:VFHM39A(2.5T)

FIG.227
(M5028270)

Item No	Part No.	Mark	Description		Req'd	Remarks : Serial No.
1	234A8-22202		BACKREST	ﾊﾞｯｸﾚｽﾄ	1	(WITHOUT BREZZZ)
-	534A2-74001		BACKREST	ﾊﾞｯｸﾚｽﾄ	1	[EXA][EXC]
-	239A8-20101		BACKREST	ﾊﾞｯｸﾚｽﾄ	1	[HBR110]
-	239A8-22111		BACKREST	ﾊﾞｯｸﾚｽﾄ	1	[HBR120]
-	239A8-20121		BACKREST	ﾊﾞｯｸﾚｽﾄ	1	[HBR130]
-	239A8-20131		BACKREST	ﾊﾞｯｸﾚｽﾄ	1	[HBR140]
-	239A8-20141		BACKREST	ﾊﾞｯｸﾚｽﾄ	1	[HBR150]
-	534A1-64402		BACKREST	ﾊﾞｯｸﾚｽﾄ	1	[WFY135]
-	534A1-64412		BACKREST	ﾊﾞｯｸﾚｽﾄ	1	[WFY146]
-	534A2-74101		BACKREST	ﾊﾞｯｸﾚｽﾄ	1	[WFY135/EXA][WFY135/EXC]
-	534A2-74201		BACKREST	ﾊﾞｯｸﾚｽﾄ	1	[WFY146/EXA][WFY146/EXC]
2	01100-14030		BOLT	ﾎﾞﾙﾄ	4	(WITHOUT BREZZZ)
-	01100-14035		BOLT	ﾎﾞﾙﾄ	4	[EXA][EXC][WFY135/EXA&C] [WFY146/EXA&C]
-	01100-14030		BOLT	ﾎﾞﾙﾄ	8	[HBR110-150]
3	01100-14025		BOLT	ﾎﾞﾙﾄ	4	(WITHOUT HBR110-150)
4	02010-00014		WASHER	ﾜｯｼｬ	8	
-	02010-00014		WASHER	ﾜｯｼｬ	4	[BREZZZ]
5	534A2-74051		PLATE,STOPPER	ﾌﾟﾚｰﾄ	2	[EXA][EXC][WFY135/EXA&C] [WFY146/EXA&C]
6	23659-42161		PLATE,SIDE	ﾌﾟﾚｰﾄ	2	[BREZZZ]
7	534A2-74301		DECAL,CAUTION	ﾃﾞｶﾙ	1	[EXA][EXC][WFY135/EXA&C] [WFY146/EXA&C]

FIG.228 MAST[VFHM39A]

(M5020710) マスト

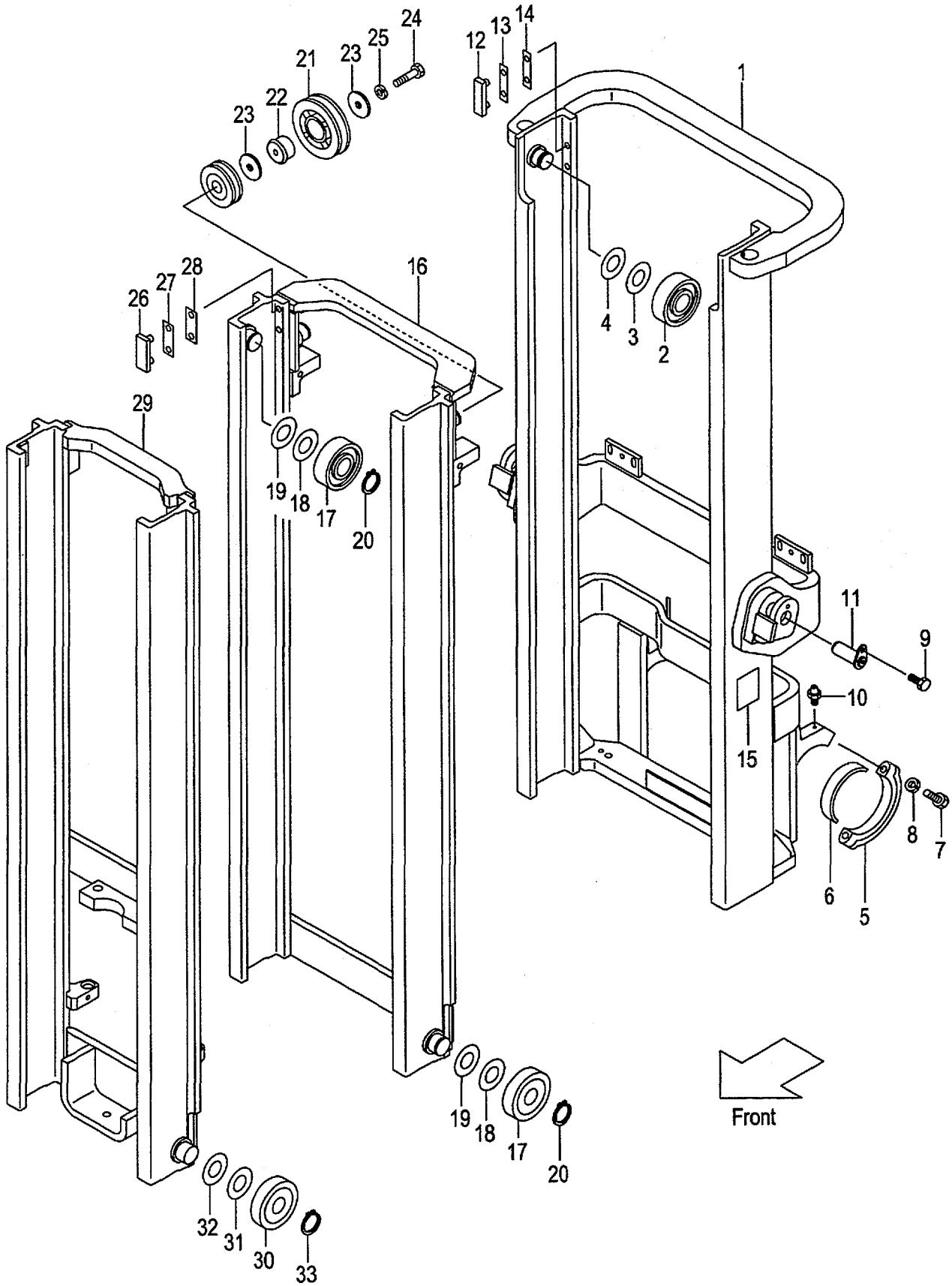

A:VFHM39A(2T)
B:VFHM39A(2.5T)

FIG.228
(M5020710)

Item No	Part No.	Mark	Description	Req'd	Remarks : Serial No.
1	239A0-70211		MAST,OUTER VFHM360 アウタマスト	1	
-	239A0-70221		MAST,OUTER VFHM400 アウタマスト	1	
-	239A0-70201		MAST,OUTER VFHM435 アウタマスト	1	
-	239A0-70231		MAST,OUTER VFHM480 アウタマスト	1	
-	239A0-70241		MAST,OUTER VFHM500 アウタマスト	1	
-	239A0-70251		MAST,OUTER VFHM540 アウタマスト	1	
-	239A0-70261		MAST,OUTER VFHM550 アウタマスト	1	
-	239A0-70271		MAST,OUTER VFHM600 アウタマスト	1	
-	239A0-70281		MAST,OUTER VFHM650 アウタマスト	1	
-	239A0-70291		MAST,OUTER VFHM700 アウタマスト	1	
-	239A0-70301		MAST,OUTER VFHM750 アウタマスト	1	
-	539A3-91411		MAST,OUTER VFHM360 アウタマスト	1	[EXR][RW][HC]
-	539A3-91421		MAST,OUTER VFHM400 アウタマスト	1	[EXR][RW][HC]
-	539A3-91401		MAST,OUTER VFHM435 アウタマスト	1	[EXR][RW][HC]
-	539A3-91431		MAST,OUTER VFHM480 アウタマスト	1	[EXR][RW][HC]
-	539A3-91441		MAST,OUTER VFHM500 アウタマスト	1	[EXR][RW][HC]
-	539A3-91451		MAST,OUTER VFHM540 アウタマスト	1	[EXR][RW][HC]
-	539A3-91461		MAST,OUTER VFHM550 アウタマスト	1	[EXR][RW][HC]
-	539A3-91471		MAST,OUTER VFHM600 アウタマスト	1	[EXR][RW][HC]
-	539A3-91481		MAST,OUTER VFHM650 アウタマスト	1	[EXR][RW][HC]
-	539A3-91491		MAST,OUTER VFHM700 アウタマスト	1	[EXR][RW][HC]
-	539A3-91501		MAST,OUTER VFHM750 アウタマスト	1	[EXR][RW][HC]
2	277P8-22051		ROLLER,END ローラ	2	
-	577P3-74001		ROLLER,END ローラ	2	[FC][CS35][FCS35][FCS45] [FCS55]
3	277P8-22071		SHIM,T-0.5 シム	12	
4	277P8-22081		SHIM,T-1.0 シム	12	
5	22018-30065		CAP,MAST-SUPPORT キャップ	2	
6	214A8-02201		BUSHING ブッシング	2	
7	01103-16065		BOLT ボルト	4	
8	02011-00016		WASHER ワッシャ	4	
9	216G8-52301		BOLT & WASHER ボルト&ワッシャ	2	
10	04901-00100		FITTING フィッティング	2	
11	272K8-52201		PIN ピン	2	
12	216G8-33401		SLIPPER スリッパ	2	
13	216G8-33361		SHIM,T-0.5 シム	8	
14	216G8-33371		SHIM,T-1.0 シム	4	
15	23678-06002		PLATE,NAME プレート	1	
16	232A0-70411		MAST,MIDDLE VFHM360 ミドルマスト	1	
-	232A0-70421		MAST,MIDDLE VFHM400 ミドルマスト	1	
-	232A0-70401		MAST,MIDDLE VFHM435 ミドルマスト	1	
-	232A0-70431		MAST,MIDDLE VFHM480 ミドルマスト	1	
-	232A0-70441		MAST,MIDDLE VFHM500 ミドルマスト	1	
-	232A0-70451		MAST,MIDDLE VFHM540 ミドルマスト	1	
-	232A0-70461		MAST,MIDDLE VFHM550 ミドルマスト	1	
-	232A0-70471		MAST,MIDDLE VFHM600 ミドルマスト	1	
-	232A0-70481		MAST,MIDDLE VFHM650 ミドルマスト	1	
-	232A0-70491		MAST,MIDDLE VFHM700 ミドルマスト	1	
-	232A0-70501		MAST,MIDDLE VFHM750 ミドルマスト	1	
17	277P8-22051		ROLLER,END ローラ	4	

FIG.228 MAST[VFHM39A]

(M5020710) マスト

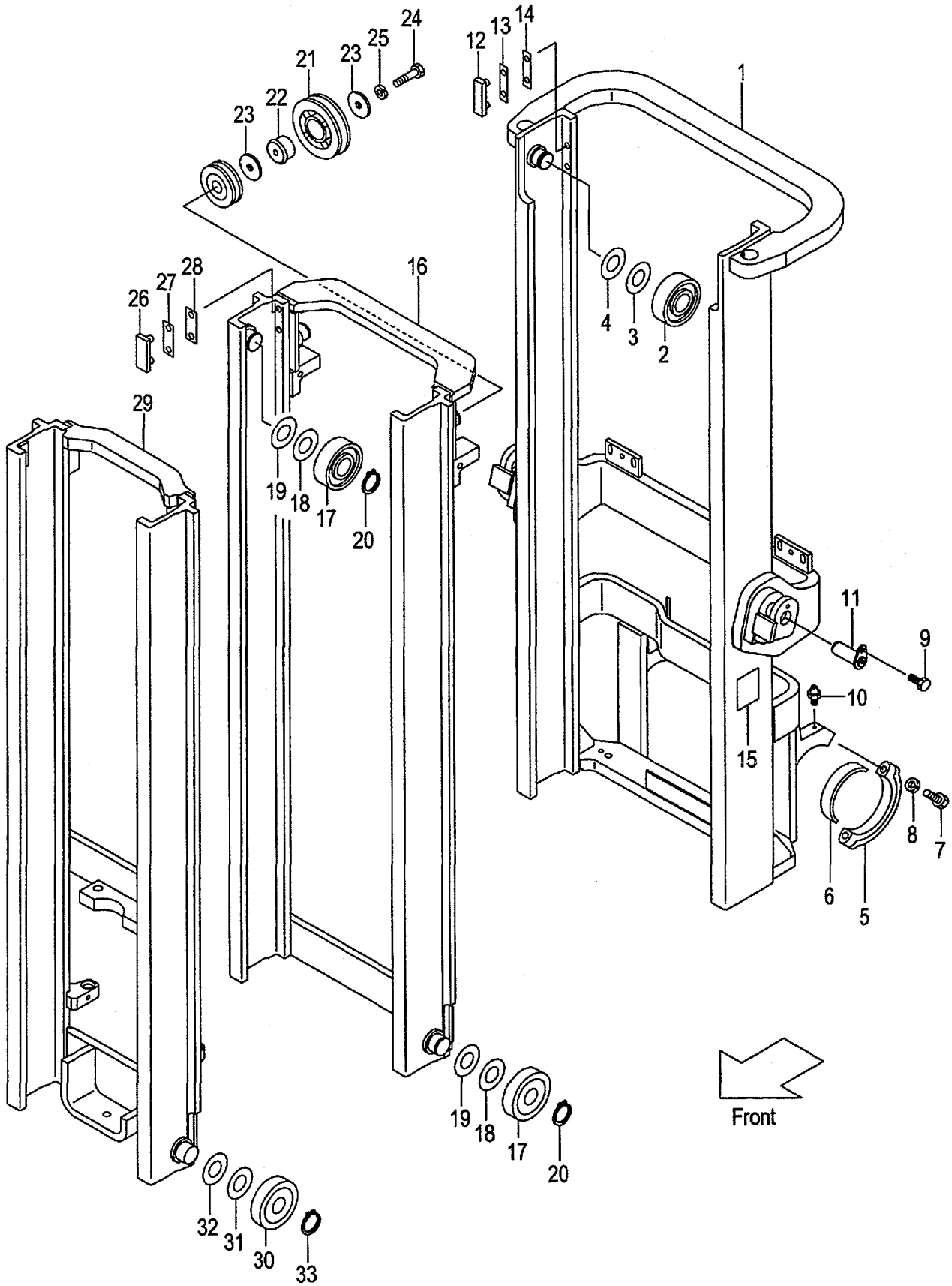

A:VFHM39A(2T)
B:VFHM39A(2.5T)

Item No	Part No.	Mark	Description		Req'd	Remarks : Serial No.
-	277P8-22061		ROLLER,END	ローラ	(2)	
-	577P3-74001		ROLLER,END	ローラ	4	[FC][CS35][FCS35][FCS45] [FCS55]
-	577P3-74011		ROLLER,END	ローラ	(2)	[FC][CS35][FCS35][FCS45] [FCS55]
18	277P8-22071		SHIM,T-0.5	シム	15	
19	277P8-22081		SHIM,T-1.0	シム	15	
20	09192-30044		RING,SNAP	スナップリング	4	
21	23670-73581		PULLEY	プーリ	1	
22	23200-72211		BRACKET	ブラケット	1	
23	23200-72221		WASHER	ワッシャ	2	
24	01100-16055		BOLT	ボルト	1	
25	02010-00016		WASHER	ワッシャ	1	
26	216G8-33351		SLIPPER	スリッパ	2	
27	216G8-33361		SHIM,T-0.5	シム	4	
28	216G8-33371		SHIM,T-1.0	シム	8	
29	231A0-70612		MAST,INNER VFHM360	インナマスト	1	
-	231A0-70622		MAST,INNER VFHM400	インナマスト	1	
-	231A0-70602		MAST,INNER VFHM435	インナマスト	1	
-	231A0-70632		MAST,INNER VFHM480	インナマスト	1	
-	231A0-70642		MAST,INNER VFHM500	インナマスト	1	
-	231A0-70652		MAST,INNER VFHM540	インナマスト	1	
-	231A0-70662		MAST,INNER VFHM550	インナマスト	1	
-	231A0-70672		MAST,INNER VFHM600	インナマスト	1	
-	231A0-70682		MAST,INNER VFHM650	インナマスト	1	
-	231A0-70692		MAST,INNER VFHM700	インナマスト	1	
-	231A0-70702		MAST,INNER VFHM750	インナマスト	1	
30	277P8-22051		ROLLER,END	ローラ	2	
-	277P8-22061		ROLLER,END	ローラ	(2)	
-	577P3-74001		ROLLER,END	ローラ	2	[FC][CS35][FCS35][FCS45] [FCS55]
-	577P3-74011		ROLLER,END	ローラ	(2)	[FC][CS35][FCS35][FCS45] [FCS55]
31	277P8-22071		SHIM,T-0.5	シム	12	
32	277P8-22081		SHIM,T-1.0	シム	12	
33	09192-30044		RING,SNAP	スナップリング	2	

FIG.229 TILT GAUGE[VFHM39A/(TG,PPC,PR,PRC,MPC)]

(M5020720) ﾃｨﾙﾄｹﾞｰｼﾞ

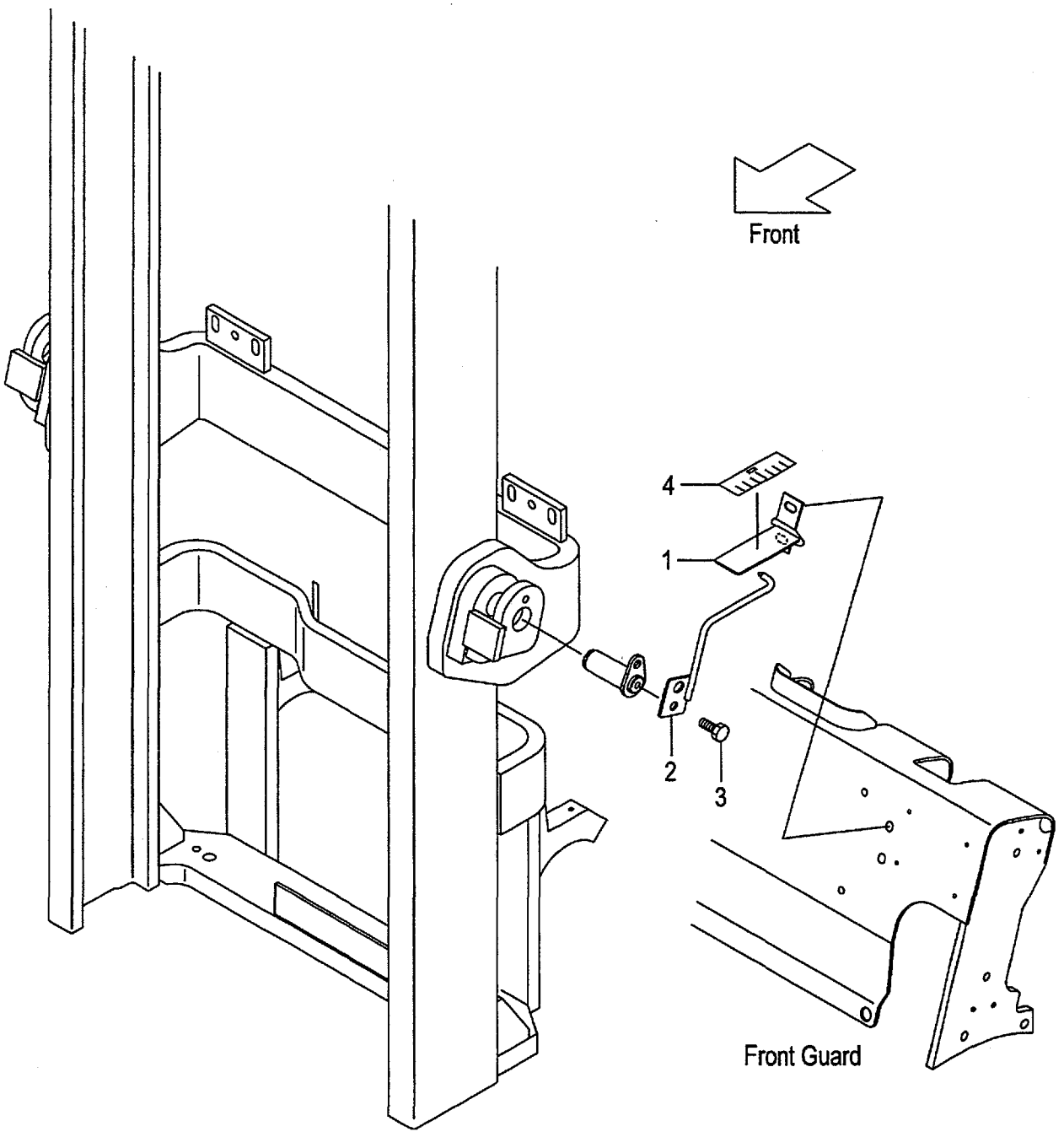

A:VFHM39A(2T)
B:VFHM39A(2.5T)

FIG.229
(M5020720)

Item No	Part No.	Mark	Description		Req'd	Remarks : Serial No.
1	639A0-10011		GAUGE,TILT	ｹﾞｰｼﾞ	1	[TG][PPC][PR][PRC][MPC]
2	639A0-10051		INDICATOR	ｲﾝｼﾞｹｰﾀ	1	[TG][PPC][PR][PRC][MPC]
3	216G4-12251		BOLT	ﾎﾞﾙﾄ	1	[TG][PPC][PR][PRC][MPC]
4	62459-23371		SEAL,GAUGE	ｼｰﾙ	1	[TG][PPC][PR][PRC][MPC]

FIG.230 LIFT CYLINDER(FRONT)[VFHM39A]

(M5020810) リフトシリンダ(フロント)

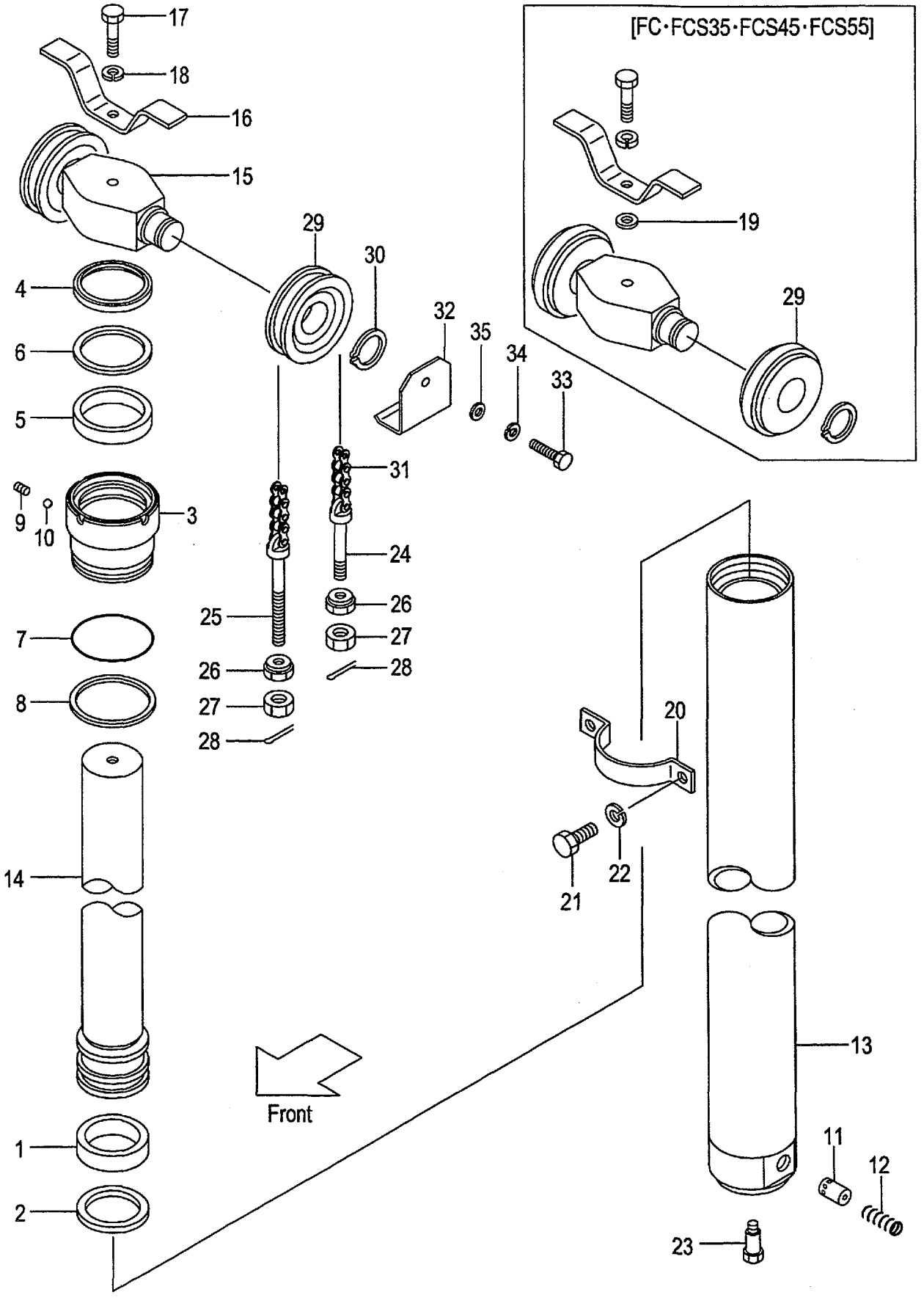

A:VFHM39A(2T)
B:VFHM39A(2.5T)

FIG.230
(M5020810)

Item No	Part No.	Mark	Description	Req'd	Remarks : Serial No.
A1	277P0-80011		CYL-ASSY,LIFT VFHM360 ﾘﾌﾄｼﾘﾝﾀﾞｱｯｾﾝ	1	INC.1-14
-	277P0-80021		CYL-ASSY,LIFT VFHM400 ﾘﾌﾄｼﾘﾝﾀﾞｱｯｾﾝ	1	INC.1-14
-	277P0-80001		CYL-ASSY,LIFT VFHM435 ﾘﾌﾄｼﾘﾝﾀﾞｱｯｾﾝ	1	INC.1-14
-	277P0-80031		CYL-ASSY,LIFT VFHM480 ﾘﾌﾄｼﾘﾝﾀﾞｱｯｾﾝ	1	INC.1-14
-	277P0-80041		CYL-ASSY,LIFT VFHM500 ﾘﾌﾄｼﾘﾝﾀﾞｱｯｾﾝ	1	INC.1-14
-	277P0-80051		CYL-ASSY,LIFT VFHM540 ﾘﾌﾄｼﾘﾝﾀﾞｱｯｾﾝ	1	INC.1-14
-	277P0-80061		CYL-ASSY,LIFT VFHM550 ﾘﾌﾄｼﾘﾝﾀﾞｱｯｾﾝ	1	INC.1-14
-	277P0-80071		CYL-ASSY,LIFT VFHM600 ﾘﾌﾄｼﾘﾝﾀﾞｱｯｾﾝ	1	INC.1-14
-	277P0-80081		CYL-ASSY,LIFT VFHM650 ﾘﾌﾄｼﾘﾝﾀﾞｱｯｾﾝ	1	INC.1-14
-	277P0-80091		CYL-ASSY,LIFT VFHM700 ﾘﾌﾄｼﾘﾝﾀﾞｱｯｾﾝ	1	INC.1-14
-	277P0-80101		CYL-ASSY,LIFT VFHM750 ﾘﾌﾄｼﾘﾝﾀﾞｱｯｾﾝ	1	INC.1-14
1	22438-42641	*	WEARING ｳｴｱﾘﾝｸﾞ	1	
2	53658-42011	*	RING,PISTON ﾘﾝｸﾞ	1	
3	277P0-82061		CAP,CYL ｷｬｯﾌﾟ	1	
4	27410-53201	*	SEAL,DUST ｼｰﾙ	1	
5	23670-82251	*	PACKING ﾊﾟｯｷﾝｸﾞ	1	
6	23670-82261	*	RING,BACK-UP ﾘﾝｸﾞ	1	
7	03350-00850	*	O-RING Oﾘﾝｸﾞ	1	
8	277P0-82071	*	RING,BACK-UP ﾘﾝｸﾞ	1	
9	234A0-52611		PLUG ﾌﾟﾗｸﾞ	1	
10	03190-00006		BALL ﾎﾞｰﾙ	1	
11	229F0-82101		PISTON ﾋﾟｽﾄﾝ	1	
12	24389-46021		SPRING ｽﾌﾟﾘﾝｸﾞ	1	
13	277P0-80511		TUBE,CYL VFHM360 ﾁｭｰﾌﾞ	1	
-	277P0-80521		TUBE,CYL VFHM400 ﾁｭｰﾌﾞ	1	
-	277P0-80501		TUBE,CYL VFHM435 ﾁｭｰﾌﾞ	1	
-	277P0-80531		TUBE,CYL VFHM480 ﾁｭｰﾌﾞ	1	
-	277P0-80541		TUBE,CYL VFHM500 ﾁｭｰﾌﾞ	1	
-	277P0-80551		TUBE,CYL VFHM540 ﾁｭｰﾌﾞ	1	
-	277P0-80561		TUBE,CYL VFHM550 ﾁｭｰﾌﾞ	1	
-	277P0-80571		TUBE,CYL VFHM600 ﾁｭｰﾌﾞ	1	
-	277P0-80581		TUBE,CYL VFHM650 ﾁｭｰﾌﾞ	1	
-	277P0-80591		TUBE,CYL VFHM700 ﾁｭｰﾌﾞ	1	
-	277P0-80601		TUBE,CYL VFHM750 ﾁｭｰﾌﾞ	1	
14	277P0-80311		ROD,PISTON VFHM360 ﾛｯﾄﾞ	1	
-	277P0-80321		ROD,PISTON VFHM400 ﾛｯﾄﾞ	1	
-	277P0-80301		ROD,PISTON VFHM435 ﾛｯﾄﾞ	1	
-	277P0-80331		ROD,PISTON VFHM480 ﾛｯﾄﾞ	1	
-	277P0-80341		ROD,PISTON VFHM500 ﾛｯﾄﾞ	1	
-	277P0-80351		ROD,PISTON VFHM540 ﾛｯﾄﾞ	1	
-	277P0-50601		ROD,PISTON VFHM550 ﾛｯﾄﾞ	1	
-	277P0-80371		ROD,PISTON VFHM600 ﾛｯﾄﾞ	1	
-	277P0-80381		ROD,PISTON VFHM650 ﾛｯﾄﾞ	1	
-	277P0-80391		ROD,PISTON VFHM700 ﾛｯﾄﾞ	1	
-	277P0-80401		ROD,PISTON VFHM750 ﾛｯﾄﾞ	1	
15	277P0-82501		HEAD,PISTON ﾍｯﾄﾞ	1	
16	214A0-82681		STOPPER,CHAIN ｽﾄｯﾊﾟ	1	
17	01100-16075		BOLT ﾎﾞﾙﾄ	1	
18	02010-00016		WASHER ﾜｯｼｬ	1	
19	02000-00016		WASHER ﾜｯｼｬ	1	[FC][FCS35][FCS45][FCS55]

FIG.230 LIFT CYLINDER(FRONT)[VFHM39A]

(M5020810) リフトシリンダ(フロント)

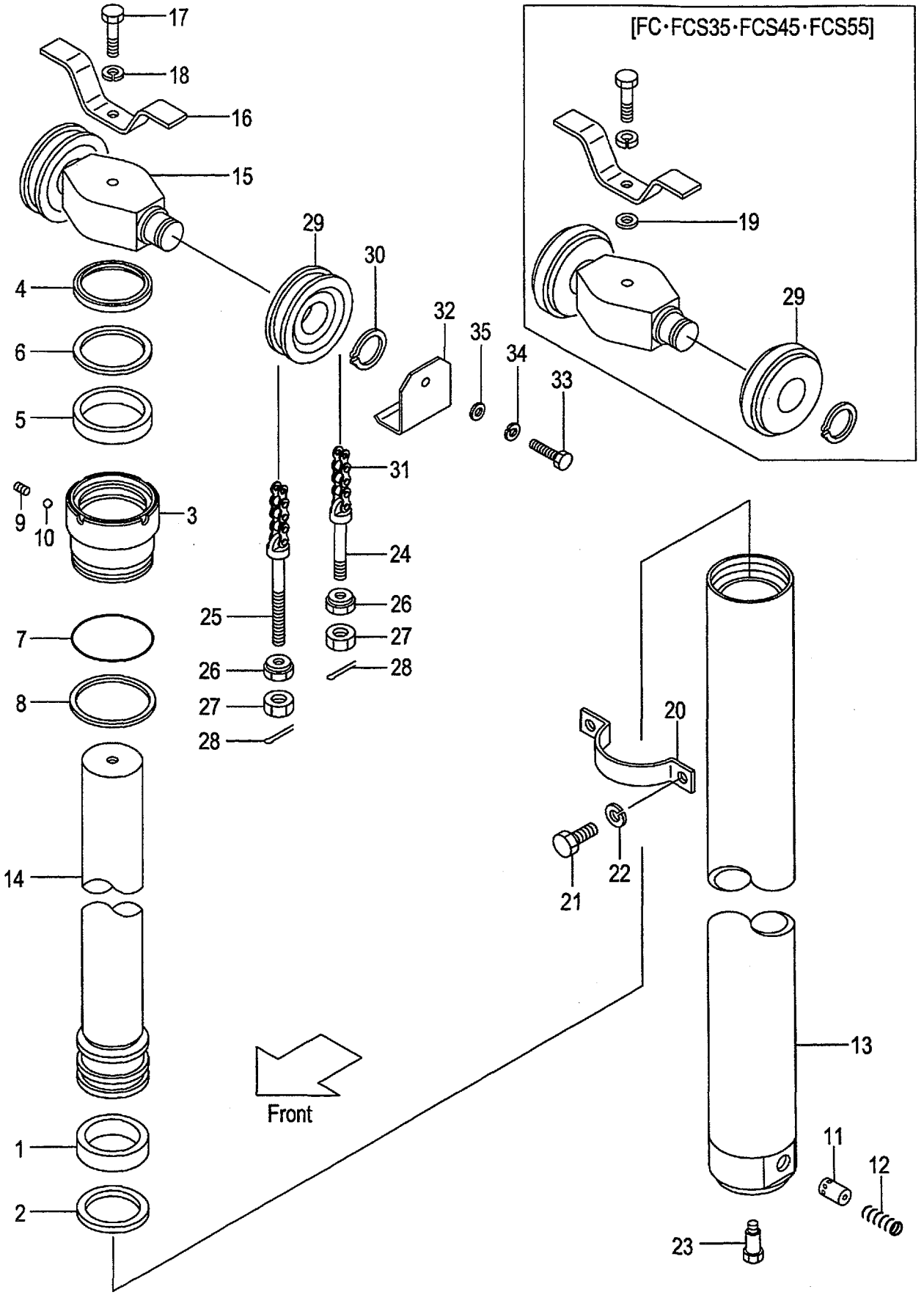

A:VFHM39A(2T)
B:VFHM39A(2.5T)

Item No	Part No.	Mark	Description		Req'd	Remarks : Serial No.
20	214A0-82651		SUPPORT,CYL	ｻﾎﾟｰﾄ	1	
21	01103-10020		BOLT	ﾎﾞﾙﾄ	2	
22	02011-00010		WASHER	ﾜｯｼｬ	2	
23	214A0-82831		BOLT	ﾎﾞﾙﾄ	1	
24	52672-72231		PIN,ANCHOR	ﾋﾟﾝ	2	
-	231A0-82001		PIN,ANCHOR	ﾋﾟﾝ	2	[FC][FCS35][FCS45][FCS55]
25	23500-82001		PIN,ANCHOR	ﾋﾟﾝ	2	
-	22218-42111		PIN,ANCHOR	ﾋﾟﾝ	2	[FC][FCS35][FCS45][FCS55]
26	22218-40191		NUT	ﾅｯﾄ	4	
27	01400-00018		NUT	ﾅｯﾄ	4	
28	02200-03030		PIN	ﾋﾟﾝ	4	
29	234A8-43501		SHEAVE	ｼｰﾌﾞ	2	
-	22208-40031		SHEAVE	ｼｰﾌﾞ	2	[FC][FCS35][FCS45][FCS55]
30	02100-00040		RING,SNAP	ｽﾅｯﾌﾟﾘﾝｸﾞ	2	
31	22679-45651		CHAIN,LEAF VFHM360	ﾁｪｰﾝ	2	
-	22679-45711		CHAIN,LEAF VFHM400	ﾁｪｰﾝ	2	
-	22679-45791		CHAIN,LEAF VFHM435	ﾁｪｰﾝ	2	
-	22679-45871		CHAIN,LEAF VFHM480	ﾁｪｰﾝ	2	
-	22679-45911		CHAIN,LEAF VFHM500	ﾁｪｰﾝ	2	
-	22679-45991		CHAIN,LEAF VFHM540	ﾁｪｰﾝ	2	
-	22679-45991		CHAIN,LEAF VFHM550	ﾁｪｰﾝ	2	
-	22679-46091		CHAIN,LEAF VFHM600	ﾁｪｰﾝ	2	
-	22679-46211		CHAIN,LEAF VFHM650	ﾁｪｰﾝ	2	
-	22679-46331		CHAIN,LEAF VFHM700	ﾁｪｰﾝ	2	
-	22679-46411		CHAIN,LEAF VFHM750	ﾁｪｰﾝ	2	
-	09001-10037		CHAIN,ROLLER VFHM360	ﾁｪｰﾝ	2	[FC][FCS35][FCS45][FCS55]
-	09001-10041		CHAIN,ROLLER VFHM400	ﾁｪｰﾝ	2	[FC][FCS35][FCS45][FCS55]
-	09001-10045		CHAIN,ROLLER VFHM435	ﾁｪｰﾝ	2	[FC][FCS35][FCS45][FCS55]
-	09001-10051		CHAIN,ROLLER VFHM480	ﾁｪｰﾝ	2	[FC][FCS35][FCS45][FCS55]
-	09001-10053		CHAIN,ROLLER VFHM500	ﾁｪｰﾝ	2	[FC][FCS35][FCS45][FCS55]
-	09001-10057		CHAIN,ROLLER VFHM540	ﾁｪｰﾝ	2	[FC][FCS35][FCS45][FCS55]
-	09001-10059		CHAIN,ROLLER VFHM550	ﾁｪｰﾝ	2	[FC][FCS35][FCS45][FCS55]
-	09001-10065		CHAIN,ROLLER VFHM600	ﾁｪｰﾝ	2	[FC][FCS35][FCS45][FCS55]
-	09001-10071		CHAIN,ROLLER VFHM650	ﾁｪｰﾝ	2	[FC][FCS35][FCS45][FCS55]
-	09001-10079		CHAIN,ROLLER VFHM700	ﾁｪｰﾝ	2	[FC][FCS35][FCS45][FCS55]
-	09001-10083		CHAIN,ROLLER VFHM750	ﾁｪｰﾝ	2	[FC][FCS35][FCS45][FCS55]
32	534A3-04001		COVER,CHAIN	ｶﾊﾞｰ	2	[EXE][EXN]
33	01100-16016		BOLT	ﾎﾞﾙﾄ	2	[EXE][EXN]
34	02010-00016		WASHER	ﾜｯｼｬ	2	[EXE][EXN]
35	02000-00016		WASHER	ﾜｯｼｬ	2	[EXE][EXN]
K1	277P0-59801		KIT,OVERHAUL	ｵｰﾊﾞｰﾎｰﾙｷｯﾄ	1	INC.1,2,4-8

FIG.231 LIFT CYLINDER(REAR)[VFHM39A]

(M5020820) リフトシリンダ(リヤー)

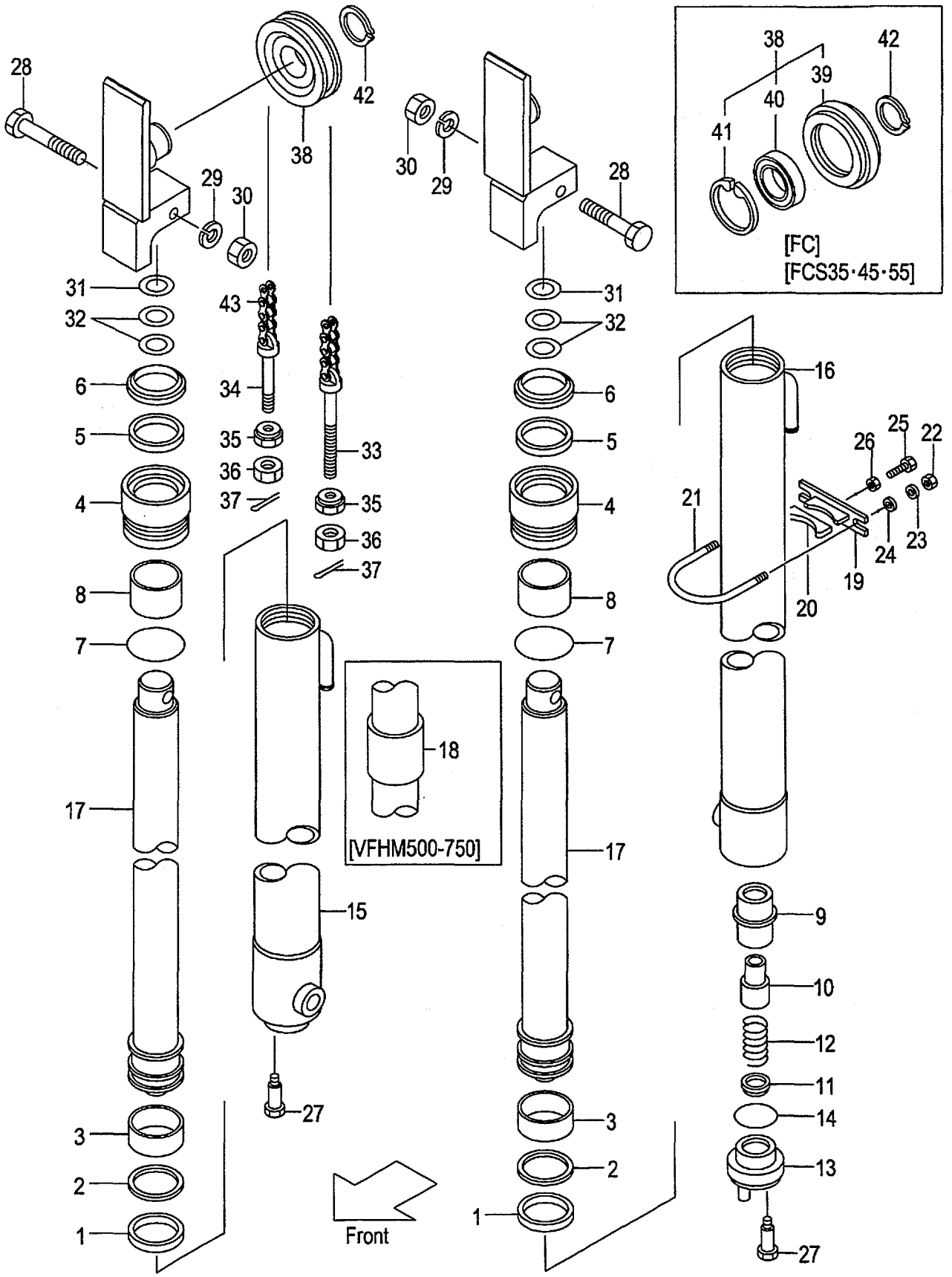

A:VFHM39A(2T)
B:VFHM39A(2.5T)

FIG.231
(M5020820)

Item No	Part No.	Mark	Description	Req'd	Remarks : Serial No.
A1	277P0-81712		CYL-ASSY,LIFT,RH VFHM360 リフトシリンダアッセン	1	INC.1-8,15,17
-	277P0-81722		CYL-ASSY,LIFT,RH VFHM400 リフトシリンダアッセン	1	INC.1-8,15,17
-	277P0-81702		CYL-ASSY,LIFT,RH VFHM435 リフトシリンダアッセン	1	INC.1-8,15,17
-	277P0-81732		CYL-ASSY,LIFT,RH VFHM480 リフトシリンダアッセン	1	INC.1-8,15,17
-	277P0-81742		CYL-ASSY,LIFT,RH VFHM500 リフトシリンダアッセン	1	INC.1-8,15,17,18
-	277P0-81752		CYL-ASSY,LIFT,RH VFHM540 リフトシリンダアッセン	1	INC.1-8,15,17,18
-	277P0-81762		CYL-ASSY,LIFT,RH VFHM550 リフトシリンダアッセン	1	INC.1-8,15,17,18
-	277P0-81772		CYL-ASSY,LIFT,RH VFHM600 リフトシリンダアッセン	1	INC.1-8,15,17,18
-	277P0-81782		CYL-ASSY,LIFT,RH VFHM650 リフトシリンダアッセン	1	INC.1-8,15,17,18
-	277P0-81792		CYL-ASSY,LIFT,RH VFHM700 リフトシリンダアッセン	1	INC.1-8,15,17,18
-	277P0-81802		CYL-ASSY,LIFT,RH VFHM750 リフトシリンダアッセン	1	INC.1-8,15,17,18
A2	277P0-81912		CYL-ASSY,LIFT,LH VFHM360 リフトシリンダアッセン	1	INC.1-14,16,17
-	277P0-81922		CYL-ASSY,LIFT,LH VFHM400 リフトシリンダアッセン	1	INC.1-14,16,17
-	277P0-81902		CYL-ASSY,LIFT,LH VFHM435 リフトシリンダアッセン	1	INC.1-14,16,17
-	277P0-81932		CYL-ASSY,LIFT,LH VFHM480 リフトシリンダアッセン	1	INC.1-14,16,17
-	277P0-81942		CYL-ASSY,LIFT,LH VFHM500 リフトシリンダアッセン	1	INC.1-14,16,17,18
-	277P0-81952		CYL-ASSY,LIFT,LH VFHM540 リフトシリンダアッセン	1	INC.1-14,16,17,18
-	277P0-81962		CYL-ASSY,LIFT,LH VFHM550 リフトシリンダアッセン	1	INC.1-14,16,17,18
-	277P0-81972		CYL-ASSY,LIFT,LH VFHM600 リフトシリンダアッセン	1	INC.1-14,16,17,18
-	277P0-81982		CYL-ASSY,LIFT,LH VFHM650 リフトシリンダアッセン	1	INC.1-14,16,17,18
-	277P0-81992		CYL-ASSY,LIFT,LH VFHM700 リフトシリンダアッセン	1	INC.1-14,16,17,18
-	277P0-82002		CYL-ASSY,LIFT,LH VFHM750 リフトシリンダアッセン	1	INC.1-14,16,17,18
1	23650-83521	*	PACKING パッキング	2	
2	23650-83531	*	RING,BACK-UP リング	2	
3	27970-53141	*	WEARING ウエアリング	2	
4	232A8-42601		CAP,CYL キャップ	2	
5	214A8-42721	*	PACKING パッキング	2	
6	214A8-46001	*	SEAL,DUST シール	2	

FIG.231 LIFT CYLINDER(REAR)[VFHM39A]

(M5020820) リフトシリンダ(リヤー)

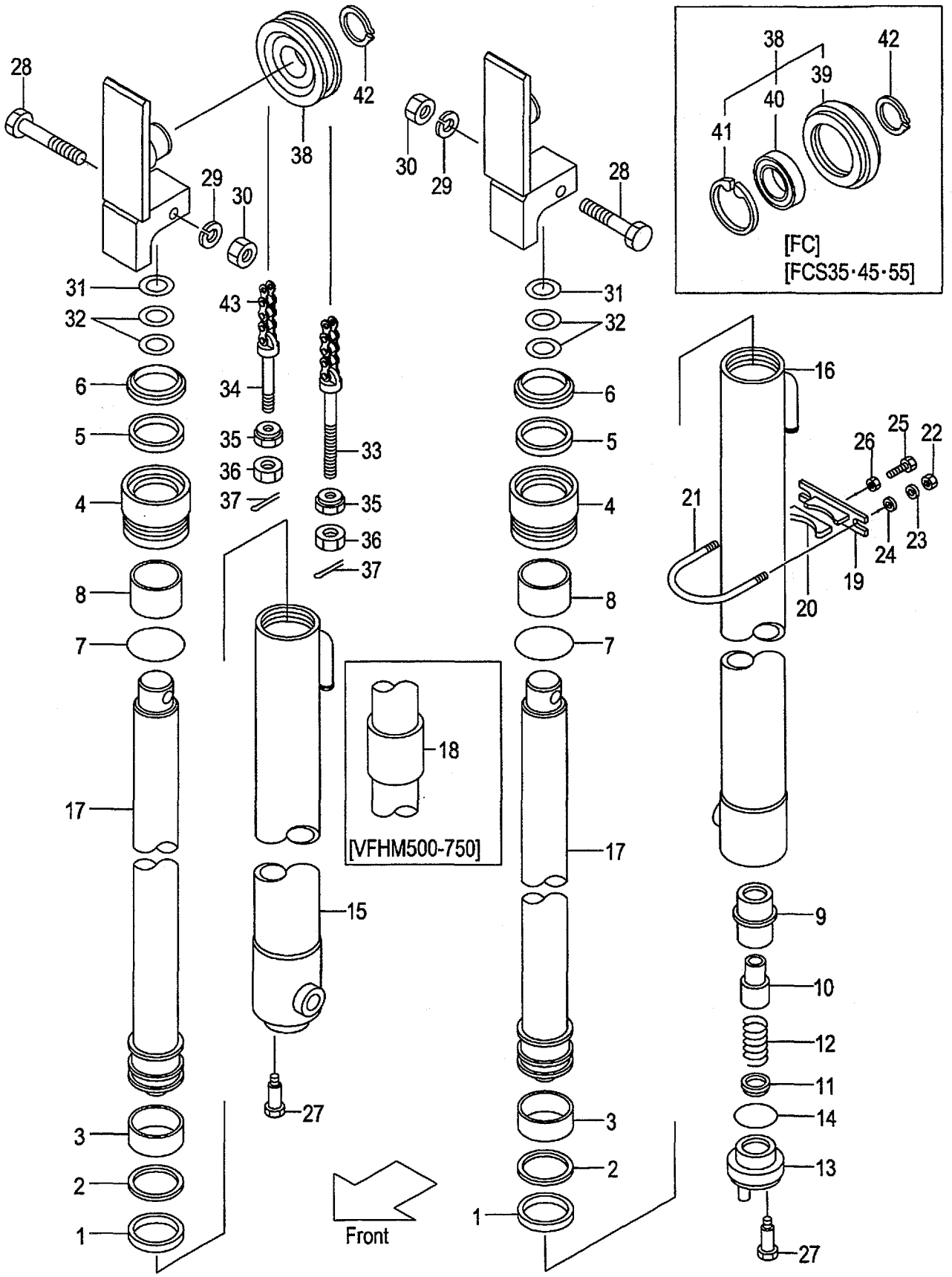

A:VFHM39A(2T)
B:VFHM39A(2.5T)

FIG.231
(M5020820)

Item No	Part No.	Mark	Description		Req'd	Remarks : Serial No.
7	232A8-42631	*	O-RING	Oﾘﾝｸﾞ	2	
8	232A8-42621		BUSHING	ﾌﾞｯｼﾝｸﾞ	2	
9	53658-43021		SLEEVE	ｽﾘｰﾌﾞ	1	(LH)
10	53658-43011		PISTON	ﾋﾟｽﾄﾝ	1	(LH)
11	53658-43001		VALVE,CHECK	ﾊﾞﾙﾌﾞ	1	(LH)
12	53658-43031		SPRING	ｽﾌﾟﾘﾝｸﾞ	1	(LH)
13	53658-43041		PLUG	ﾌﾟﾗｸﾞ	1	(LH)
14	03320-00340		O-RING	Oﾘﾝｸﾞ	1	(LH)
15	277P0-81312		TUBE,CYL,RH VFHM360	ﾁｭｰﾌﾞ	1	
-	277P0-81322		TUBE,CYL,RH VFHM400	ﾁｭｰﾌﾞ	1	
-	277P0-81302		TUBE,CYL,RH VFHM435	ﾁｭｰﾌﾞ	1	
-	277P0-81332		TUBE,CYL,RH VFHM480	ﾁｭｰﾌﾞ	1	
-	277P0-81342		TUBE,CYL,RH VFHM500	ﾁｭｰﾌﾞ	1	
-	277P0-81352		TUBE,CYL,RH VFHM540	ﾁｭｰﾌﾞ	1	
-	277P0-81362		TUBE,CYL,RH VFHM550	ﾁｭｰﾌﾞ	1	
-	277P0-81372		TUBE,CYL,RH VFHM600	ﾁｭｰﾌﾞ	1	
-	277P0-81382		TUBE,CYL,RH VFHM650	ﾁｭｰﾌﾞ	1	
-	277P0-81392		TUBE,CYL,RH VFHM700	ﾁｭｰﾌﾞ	1	
-	277P0-81402		TUBE,CYL,RH VFHM750	ﾁｭｰﾌﾞ	1	
16	277P0-81512		TUBE,CYL,LH VFHM360	ﾁｭｰﾌﾞ	1	
-	277P0-81522		TUBE,CYL,LH VFHM400	ﾁｭｰﾌﾞ	1	
-	277P0-81502		TUBE,CYL,LH VFHM435	ﾁｭｰﾌﾞ	1	
-	277P0-81532		TUBE,CYL,LH VFHM480	ﾁｭｰﾌﾞ	1	
-	277P0-81542		TUBE,CYL,LH VFHM500	ﾁｭｰﾌﾞ	1	
-	277P0-81552		TUBE,CYL,LH VFHM540	ﾁｭｰﾌﾞ	1	
-	277P0-81562		TUBE,CYL,LH VFHM550	ﾁｭｰﾌﾞ	1	
-	277P0-81572		TUBE,CYL,LH VFHM600	ﾁｭｰﾌﾞ	1	
-	277P0-81582		TUBE,CYL,LH VFHM650	ﾁｭｰﾌﾞ	1	
-	277P0-81592		TUBE,CYL,LH VFHM700	ﾁｭｰﾌﾞ	1	
-	277P0-81602		TUBE,CYL,LH VFHM750	ﾁｭｰﾌﾞ	1	
17	277P0-81111		ROD,PISTON VFHM360	ﾛｯﾄﾞ	2	
-	277P0-81121		ROD,PISTON VFHM400	ﾛｯﾄﾞ	2	
-	277P0-81101		ROD,PISTON VFHM435	ﾛｯﾄﾞ	2	
-	277P0-81131		ROD,PISTON VFHM480	ﾛｯﾄﾞ	2	
-	277P0-81141		ROD,PISTON VFHM500	ﾛｯﾄﾞ	2	
-	277P0-81151		ROD,PISTON VFHM540	ﾛｯﾄﾞ	2	
-	277P0-81161		ROD,PISTON VFHM550	ﾛｯﾄﾞ	2	
-	277P0-81171		ROD,PISTON VFHM600	ﾛｯﾄﾞ	2	
-	277P0-81181		ROD,PISTON VFHM650	ﾛｯﾄﾞ	2	
-	277P0-81191		ROD,PISTON VFHM700	ﾛｯﾄﾞ	2	
-	277P0-81201		ROD,PISTON VFHM750	ﾛｯﾄﾞ	2	
18	23650-83561		SPACER VFHM500	ｽﾍﾟｰｻ	2	
-	23650-83551		SPACER VFHM540	ｽﾍﾟｰｻ	2	
-	23650-83561		SPACER VFHM550	ｽﾍﾟｰｻ	2	
-	23650-83571		SPACER VFHM600	ｽﾍﾟｰｻ	2	
-	29690-83011		SPACER VFHM650	ｽﾍﾟｰｻ	2	
-	29690-83021		SPACER VFHM700	ｽﾍﾟｰｻ	2	
-	29690-83021		SPACER VFHM750	ｽﾍﾟｰｻ	2	
A3	215E8-42171		SUPPORT-ASSY,CYL	ｼﾘﾝﾀﾞｻﾎﾟｰﾄｱｯｾﾝ	2	(VFHM360-550) INC.19,20
-	215E8-42171		SUPPORT-ASSY,CYL	ｼﾘﾝﾀﾞｻﾎﾟｰﾄｱｯｾﾝ	4	(VFHM600-750) INC.19,20

FIG.231 LIFT CYLINDER(REAR)[VFHM39A]

(M5020820) リフトシリンダ(リヤー)

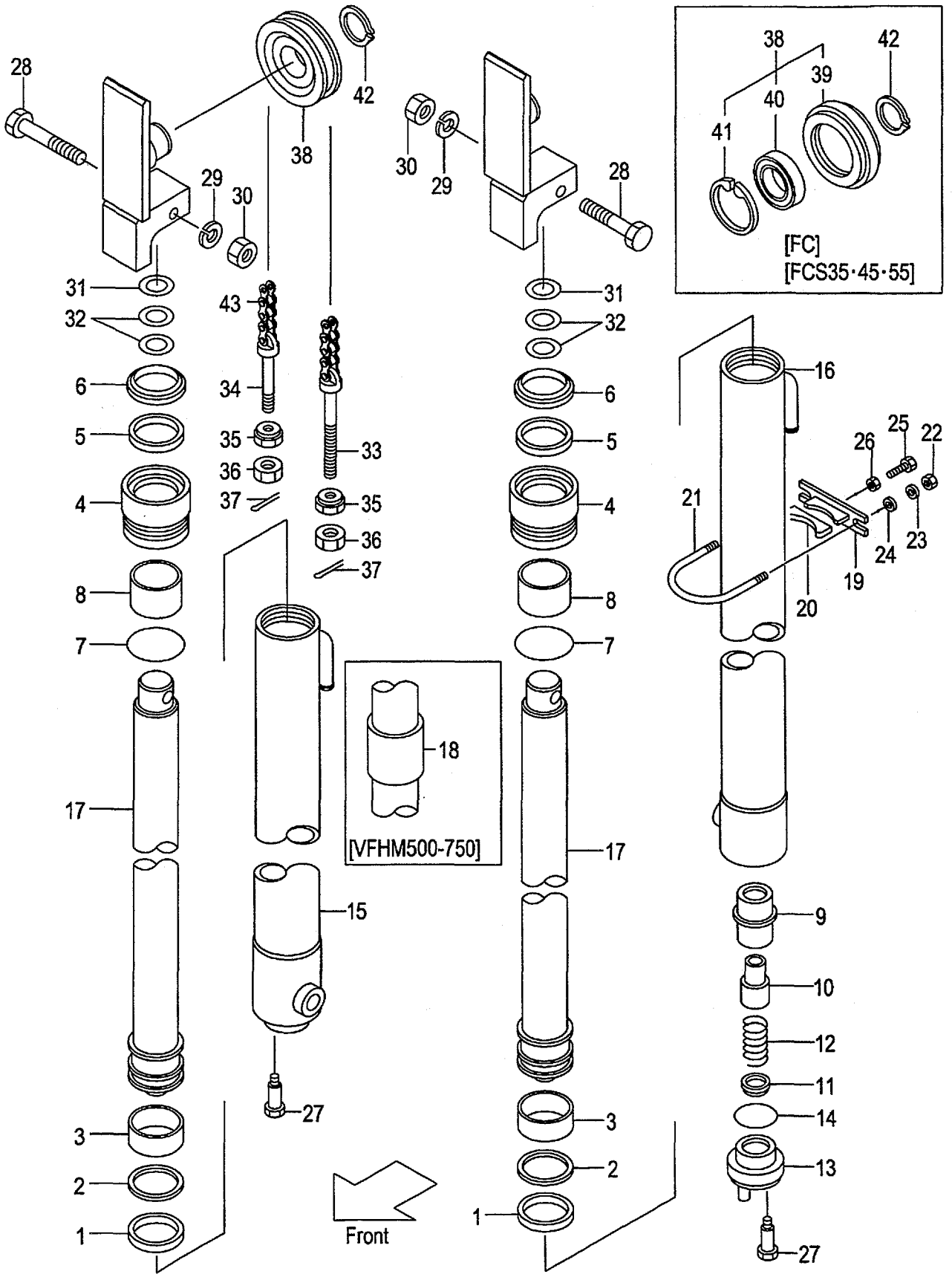

A:VFHM39A(2T)
B:VFHM39A(2.5T)

FIG.231
(M5020820)

Item No	Part No.	Mark	Description		Req'd	Remarks : Serial No.
19	215E8-42181		SUPPORT,CYL	ｻﾎﾟｰﾄ	2	(VFHM360-550)
-	215E8-42181		SUPPORT,CYL	ｻﾎﾟｰﾄ	4	(VFHM600-750)
20	24868-42111		RUBBER	ﾗﾊﾞｰ	2	(VFHM360-550)
-	24868-42111		RUBBER	ﾗﾊﾞｰ	4	(VFHM600-750)
21	234A8-42551		U-BOLT	Uﾎﾞﾙﾄ	2	(VFHM360-550)
-	234A8-42551		U-BOLT	Uﾎﾞﾙﾄ	4	(VFHM600-750)
22	234A8-42561		NUT	ﾅｯﾄ	4	(VFHM360-550)
-	234A8-42561		NUT	ﾅｯﾄ	8	(VFHM600-750)
23	02010-20010		WASHER	ﾜｯｼｬ	4	(VFHM360-550)
-	02010-20010		WASHER	ﾜｯｼｬ	8	(VFHM600-750)
24	02000-20010		WASHER	ﾜｯｼｬ	4	(VFHM360-550)
-	02000-20010		WASHER	ﾜｯｼｬ	8	(VFHM600-750)
25	232A8-42201		BOLT	ﾎﾞﾙﾄ	2	(VFHM360-550)
-	232A8-42201		BOLT	ﾎﾞﾙﾄ	4	(VFHM600-750)
26	234A8-42571		NUT	ﾅｯﾄ	2	(VFHM360-550)
-	234A8-42571		NUT	ﾅｯﾄ	4	(VFHM600-750)
27	214A8-42661		BOLT	ﾎﾞﾙﾄ	2	
28	01100-12070		BOLT	ﾎﾞﾙﾄ	2	
29	02010-00012		WASHER	ﾜｯｼｬ	2	
30	01400-00012		NUT	ﾅｯﾄ	2	
31	23917-42191		SHIM,T-1.0	ｼﾑ	10	
32	22679-43831		SHIM,T-0.5	ｼﾑ	10	
33	52672-72231		PIN,ANCHOR	ﾋﾟﾝ	2	
-	22218-42111		PIN,ANCHOR	ﾋﾟﾝ	2	[FC][FCS35][FCS45][FCS55]
34	23500-82001		PIN,ANCHOR	ﾋﾟﾝ	2	
-	23658-42531		PIN,ANCHOR	ﾋﾟﾝ	2	[FC][FCS35][FCS45][FCS55]
35	22218-40191		NUT	ﾅｯﾄ	4	
36	01400-00018		NUT	ﾅｯﾄ	4	
37	02200-03030		PIN	ﾋﾟﾝ	4	
38	277P0-83001		SHEAVE	ｼｰﾌﾞ	2	
-	577P3-74021		SHEAVE	ｼｰﾌﾞ	2	[FC][FCS35][FCS45][FCS55] INC.39-41
39	577P3-74031		BODY,SHEAVE	ﾎﾞﾃﾞｨ	2	[FC][FCS35][FCS45][FCS55]
40	03042-06308		BEARING	ﾍﾞｱﾘﾝｸﾞ	2	[FC][FCS35][FCS45][FCS55]
41	02110-00090		RING,SNAP	ｽﾅｯﾌﾟﾘﾝｸﾞ	2	[FC][FCS35][FCS45][FCS55]
42	02100-00040		RING,SNAP	ｽﾅｯﾌﾟﾘﾝｸﾞ	2	
43	22679-45831		CHAIN,LEAF VFHM360	ﾁｪｰﾝ	2	
-	22679-45891		CHAIN,LEAF VFHM400	ﾁｪｰﾝ	2	
-	22679-45971		CHAIN,LEAF VFHM435	ﾁｪｰﾝ	2	
-	22679-46031		CHAIN,LEAF VFHM480	ﾁｪｰﾝ	2	
-	22679-46091		CHAIN,LEAF VFHM500	ﾁｪｰﾝ	2	
-	22679-46151		CHAIN,LEAF VFHM540	ﾁｪｰﾝ	2	
-	22679-46171		CHAIN,LEAF VFHM550	ﾁｪｰﾝ	2	
-	22679-46271		CHAIN,LEAF VFHM600	ﾁｪｰﾝ	2	
-	22679-46391		CHAIN,LEAF VFHM650	ﾁｪｰﾝ	2	
-	22679-46511		CHAIN,LEAF VFHM700	ﾁｪｰﾝ	2	
-	22679-46591		CHAIN,LEAF VFHM750	ﾁｪｰﾝ	2	
-	09001-10049		CHAIN,ROLLER VFHM360	ﾁｪｰﾝ	2	[FC][FCS35][FCS45][FCS55]
-	09001-10053		CHAIN,ROLLER VFHM400	ﾁｪｰﾝ	2	[FC][FCS35][FCS45][FCS55]
-	09001-10057		CHAIN,ROLLER VFHM435	ﾁｪｰﾝ	2	[FC][FCS35][FCS45][FCS55]

FIG.231 LIFT CYLINDER(REAR)[VFHM39A]

(M5020820) リフトシリンダ(リヤー)

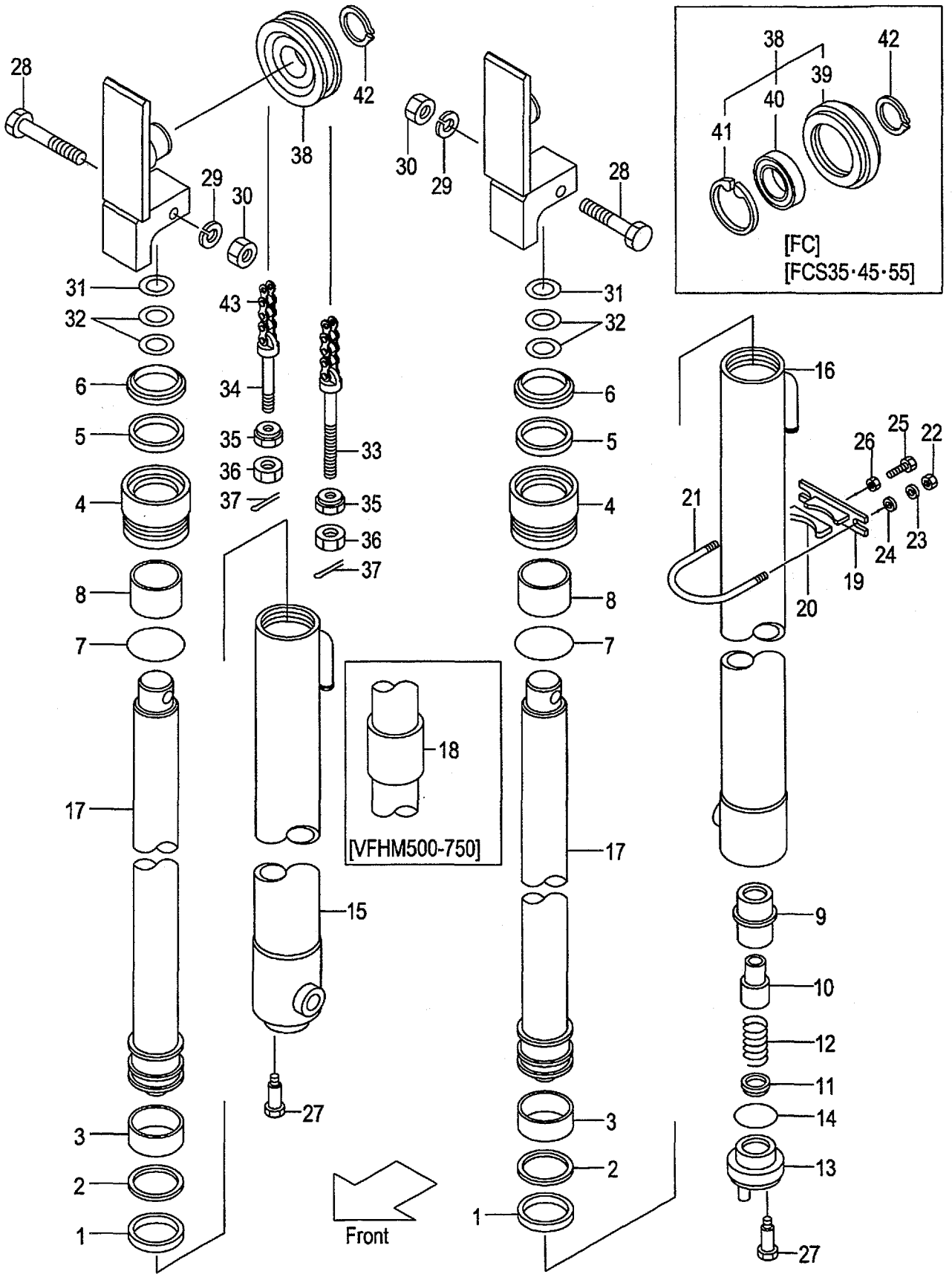

A:VFHM39A(2T)
B:VFHM39A(2.5T)

Item No	Part No.	Mark	Description	Req'd	Remarks : Serial No.
-	09001-10063		CHAIN,ROLLER VFHM480 チェーン	2	[FC][FCS35][FCS45][FCS55]
-	09001-10065		CHAIN,ROLLER VFHM500 チェーン	2	[FC][FCS35][FCS45][FCS55]
-	09001-10069		CHAIN,ROLLER VFHM540 チェーン	2	[FC][FCS35][FCS45][FCS55]
-	09001-10071		CHAIN,ROLLER VFHM550 チェーン	2	[FC][FCS35][FCS45][FCS55]
-	09001-10077		CHAIN,ROLLER VFHM600 チェーン	2	[FC][FCS35][FCS45][FCS55]
-	09001-10083		CHAIN,ROLLER VFHM650 チェーン	2	[FC][FCS35][FCS45][FCS55]
-	09001-10091		CHAIN,ROLLER VFHM700 チェーン	2	[FC][FCS35][FCS45][FCS55]
-	09001-10095		CHAIN,ROLLER VFHM750 チェーン	2	[FC][FCS35][FCS45][FCS55]
K1	277P0-89811		KIT,OVERHAUL オーバ゛ホールキット	2	INC.1-3,5-7

FIG.232 MAST PIPING[VFHM39A]

(M5020830) ﾏｽﾄﾊﾟｲﾋﾟﾝｸﾞ

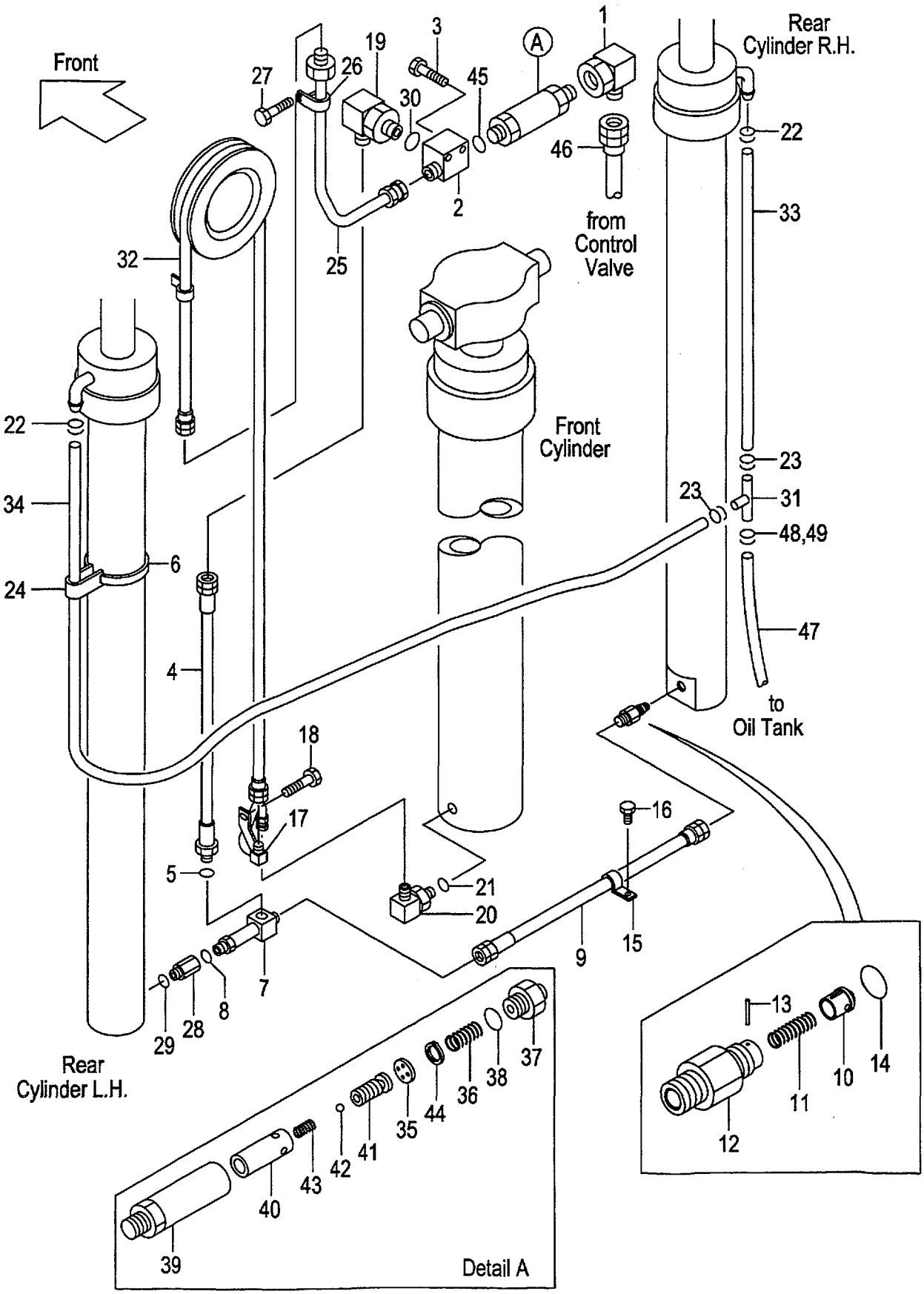

A:VFHM39A(2T)
B:VFHM39A(2.5T)

FIG.232
(M5020830)

Item No	Part No.	Mark	Description		Req'd	Remarks : Serial No.
1	62150-14321		ELBOW	ｴﾙﾎﾞ	1	
2	277P0-92061		THREE-WAY	ｽﾘｰｳｴｲ	1	
3	01184-10060		BOLT	ﾎﾞﾙﾄ	2	
A1	239A0-92101		HOSE-ASSY	ﾎｰｽｱｯｾﾝ	1	INC.4,5
4	232A0-92141		HOSE	ﾎｰｽ	1	
5	03320-00180		O-RING	Oﾘﾝｸﾞ	1	
6	04913-21380		BAND	ﾊﾞﾝﾄﾞ	2	
A2	234A8-41101		THREE-WAY-ASSY	ｽﾘｰｳｪｲｱｯｾﾝ	1	INC.7,8
7	NO PART NO.	#	THREE-WAY	ｽﾘｰｳｴｲ	1	
8	03320-00140		O-RING	Oﾘﾝｸﾞ	1	
9	277T0-62071		HOSE	ﾎｰｽ	1	
A3	234A8-40701		VALVE-ASSY,CUT	ｶｯﾄﾊﾞﾙﾌﾞｱｯｾﾝ	1	INC.10-14
10	234A8-42602		PISTON	ﾋﾟｽﾄﾝ	1	
11	234A8-42611		SPRING	ｽﾌﾟﾘﾝｸﾞ	1	
12	234A8-42622		NIPPLE	ﾆｯﾌﾟﾙ	1	
13	02270-01014		PIN	ﾋﾟﾝ	1	
14	03320-00140		O-RING	Oﾘﾝｸﾞ	1	
15	214A8-43081		CLIP	ｸﾘｯﾌﾟ	1	
16	01184-10020		BOLT & WASHER	ﾎﾞﾙﾄ&ﾜｯｼｬ	1	
17	277T0-90151		PIPE	ﾊﾟｲﾌﾟ	1	
18	01186-10020		BOLT & WASHER	ﾎﾞﾙﾄ&ﾜｯｼｬ	1	
19	04150-00404		ELBOW	ｴﾙﾎﾞ	1	
A4	229F0-91001		ELBOW-ASSY	ｴﾙﾎﾞｱｯｾﾝ	1	INC.20,21
20	NO PART NO.	#	ELBOW	ｴﾙﾎﾞ	1	
21	03320-00240		O-RING	Oﾘﾝｸﾞ	1	
22	04911-00018		CLIP	ｸﾘｯﾌﾟ	2	
-	24329-46201		CLIP	ｸﾘｯﾌﾟ	2	[FC][RTL][CS35][FCS35] [FCS45][FCS55]
23	04911-00018		CLIP	ｸﾘｯﾌﾟ	2	
-	04911-00021		CLIP	ｸﾘｯﾌﾟ	2	[FC][RTL][CS35][FCS35] [FCS45][FCS55]
24	23678-42401		BAND,HOSE	ﾊﾞﾝﾄﾞ	2	
-	53675-54101		BAND,HOSE	ﾊﾞﾝﾄﾞ	2	[FC][RTL][CS35][FCS35] [FCS45][FCS55]
25	239A0-90161		PIPE	ﾊﾟｲﾌﾟ	1	INC.26
26	23200-62171		CLIP	ｸﾘｯﾌﾟ	1	
27	01183-06016		BOLT & WASHER	ﾎﾞﾙﾄ&ﾜｯｼｬ	2	
28	234A0-62111		ADAPTER	ｱﾀﾞﾌﾟﾀ	1	
29	03320-00140		O-RING	Oﾘﾝｸﾞ	1	
30	03320-00180		O-RING	Oﾘﾝｸﾞ	1	
31	23679-45051		THREE-WAY	ｽﾘｰｳｴｲ	1	
-	53675-55051		THREE-WAY	ｽﾘｰｳｴｲ	1	[FC][RTL][CS35][FCS35] [FCS45][FCS55]
32	04601-44200		HOSE VFHM360	ﾎｰｽ	1	
-	04601-44224		HOSE VFHM400	ﾎｰｽ	1	
-	04601-44249		HOSE VFHM435	ﾎｰｽ	1	
-	04601-44279		HOSE VFHM480	ﾎｰｽ	1	
-	04601-44299		HOSE VFHM500	ﾎｰｽ	1	
-	04601-44323		HOSE VFHM540	ﾎｰｽ	1	
-	04601-44331		HOSE VFHM550	ﾎｰｽ	1	

FIG.232 MAST PIPING[VFHM39A]

(M5020830) ﾏｽﾄﾊﾟｲﾋﾟﾝｸﾞ

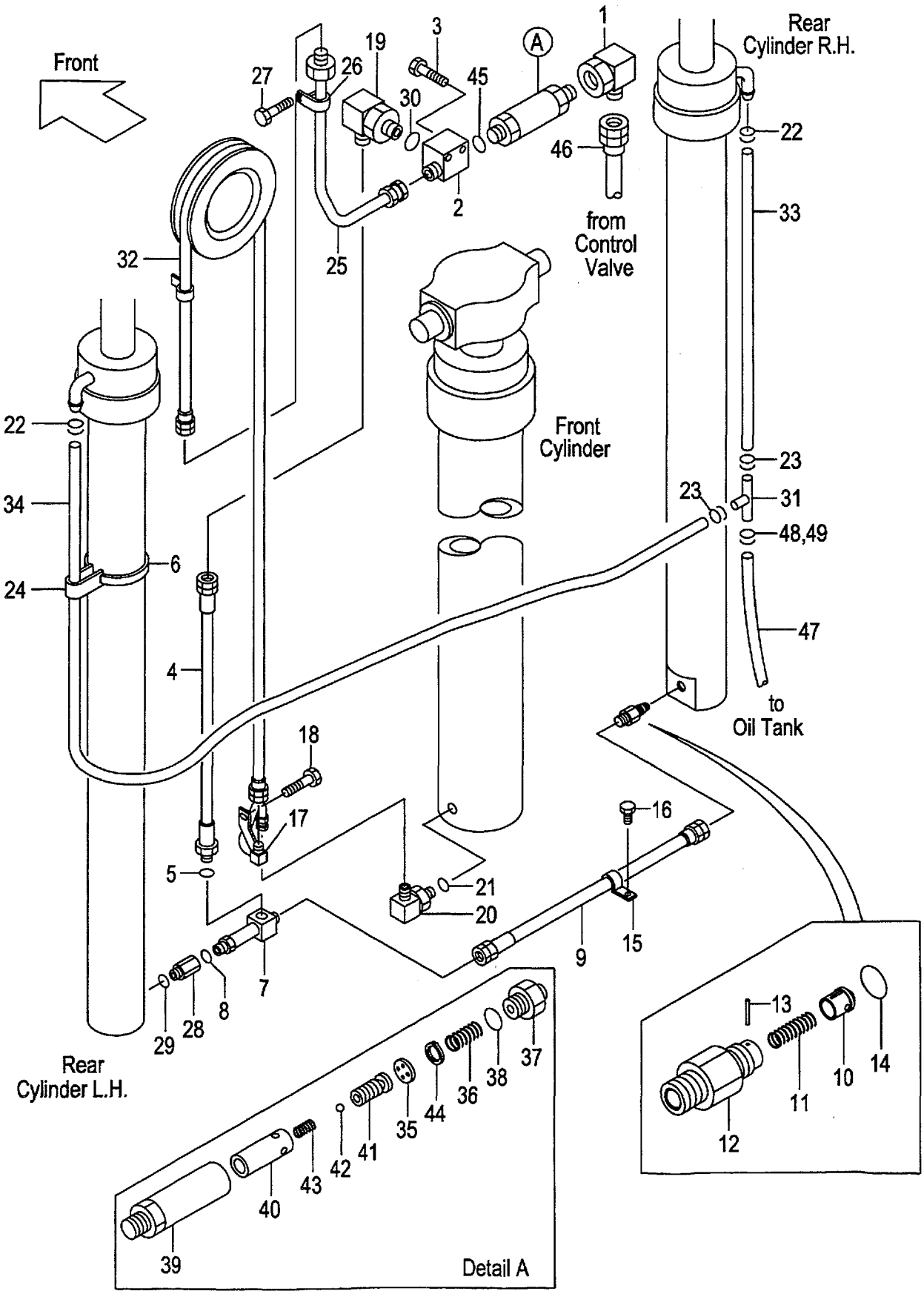

A:VFHM39A(2T)
B:VFHM39A(2.5T)

Item No	Part No.	Mark	Description	Req'd	Remarks : Serial No.
-	04601-44367		HOSE VFHM600 ホース	1	
-	04601-44410		HOSE VFHM650 ホース	1	
-	04601-44453		HOSE VFHM700 ホース	1	
-	04601-44485		HOSE VFHM750 ホース	1	
33	23678-40080		TUBE,RH VFHM360 チューブ゛	1	
-	23678-40095		TUBE,RH VFHM400 チューブ゛	1	
-	23678-40105		TUBE,RH VFHM435 チューブ゛	1	
-	23678-40120		TUBE,RH VFHM480 チューブ゛	1	
-	23678-40130		TUBE,RH VFHM500 チューブ゛	1	
-	23678-40145		TUBE,RH VFHM540 チューブ゛	1	
-	23678-40150		TUBE,RH VFHM550 チューブ゛	1	
-	23678-40165		TUBE,RH VFHM600 チューブ゛	1	
-	23678-40190		TUBE,RH VFHM650 チューブ゛	1	
-	23678-40210		TUBE,RH VFHM700 チューブ゛	1	
-	23678-40255		TUBE,RH VFHM750 チューブ゛	1	
-	04710-04080		HOSE,RH VFHM360 ホース	1	[FC][RTL][CS35][FCS35] [FCS45][FCS55]
-	04710-04095		HOSE,RH VFHM400 ホース	1	[FC][RTL][CS35][FCS35] [FCS45][FCS55]
-	04710-04105		HOSE,RH VFHM435 ホース	1	[FC][RTL][CS35][FCS35] [FCS45][FCS55]
-	04710-04120		HOSE,RH VFHM480 ホース	1	[FC][RTL][CS35][FCS35] [FCS45][FCS55]
-	04710-04130		HOSE,RH VFHM500 ホース	1	[FC][RTL][CS35][FCS35] [FCS45][FCS55]
-	04710-04145		HOSE,RH VFHM540 ホース	1	[FC][RTL][CS35][FCS35] [FCS45][FCS55]
-	04710-04150		HOSE,RH VFHM550 ホース	1	[FC][RTL][CS35][FCS35] [FCS45][FCS55]
-	04710-04165		HOSE,RH VFHM600 ホース	1	[FC][RTL][CS35][FCS35] [FCS45][FCS55]
-	04710-04190		HOSE,RH VFHM650 ホース	1	[FC][RTL][CS35][FCS35] [FCS45][FCS55]
-	04710-04210		HOSE,RH VFHM700 ホース	1	[FC][RTL][CS35][FCS35] [FCS45][FCS55]
-	04710-04225		HOSE,RH VFHM750 ホース	1	[FC][RTL][CS35][FCS35] [FCS45][FCS55]
34	23678-40145		TUBE,LH VFHM360 チューブ゛	1	
-	23678-40160		TUBE,LH VFHM400 チューブ゛	1	
-	23678-40170		TUBE,LH VFHM435 チューブ゛	1	
-	23678-40185		TUBE,LH VFHM480 チューブ゛	1	
-	23678-40195		TUBE,LH VFHM500 チューブ゛	1	
-	23678-40210		TUBE,LH VFHM540 チューブ゛	1	
-	23678-40215		TUBE,LH VFHM550 チューブ゛	1	
-	23678-40230		TUBE,LH VFHM600 チューブ゛	1	
-	23678-40255		TUBE,LH VFHM650 チューブ゛	1	
-	23678-40275		TUBE,LH VFHM700 チューブ゛	1	
-	23678-40290		TUBE,LH VFHM750 チューブ゛	1	
-	04710-04145		HOSE,LH VFHM360 ホース	1	[FC][RTL][CS35][FCS35] [FCS45][FCS55]

FIG.232 MAST PIPING[VFHM39A]

(M5020830) ﾏｽﾄﾊﾟｲﾋﾟﾝｸﾞ

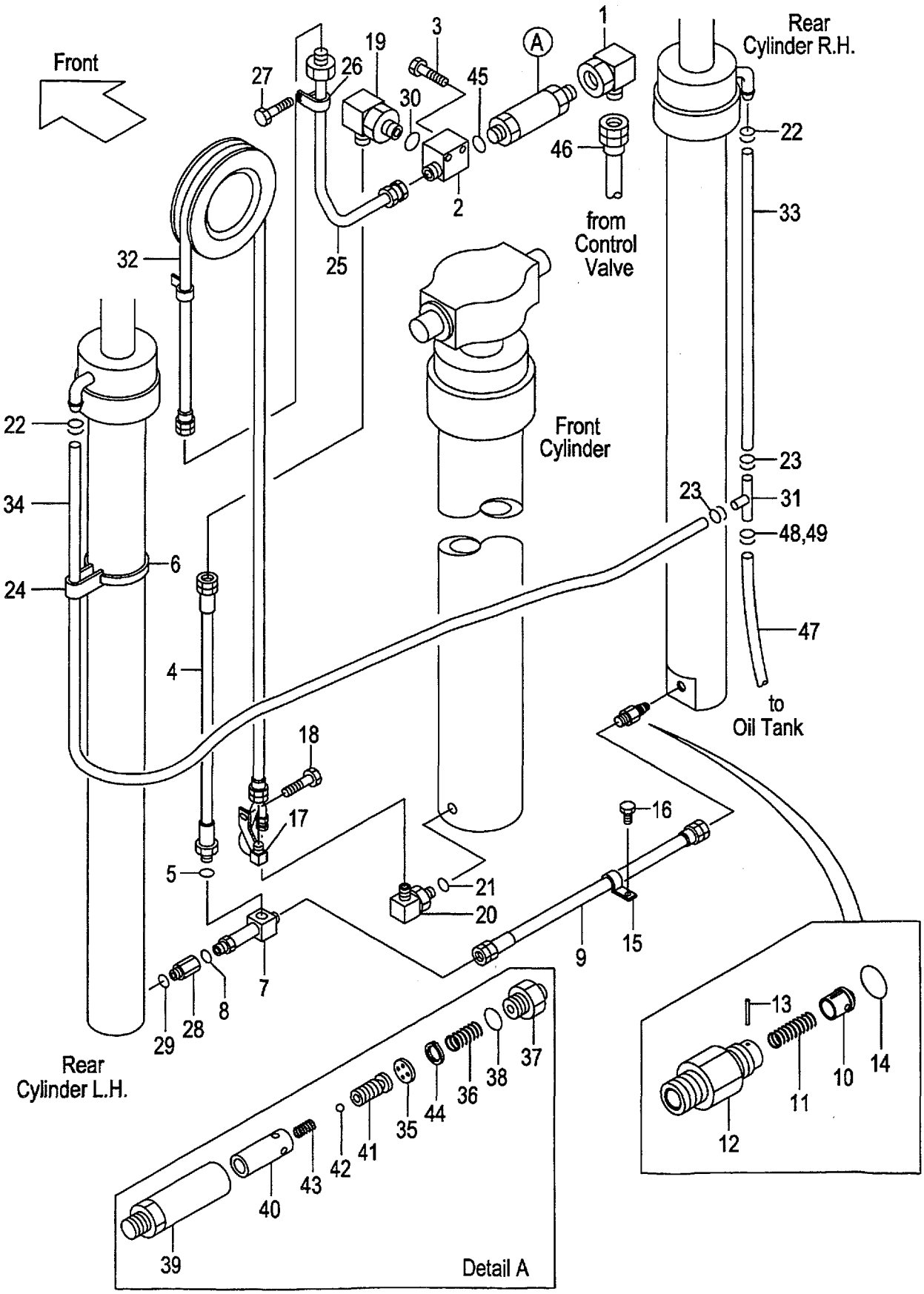

A:VFHM39A(2T)
B:VFHM39A(2.5T)

FIG.232
(M5020830)

Item No	Part No.	Mark	Description		Req'd	Remarks : Serial No.
-	04710-04160		HOSE,LH VFHM400	ホース	1	[FC][RTL][CS35][FCS35] [FCS45][FCS55]
-	04710-04170		HOSE,LH VFHM435	ホース	1	[FC][RTL][CS35][FCS35] [FCS45][FCS55]
-	04710-04185		HOSE,LH VFHM480	ホース	1	[FC][RTL][CS35][FCS35] [FCS45][FCS55]
-	04710-04195		HOSE,LH VFHM500	ホース	1	[FC][RTL][CS35][FCS35] [FCS45][FCS55]
-	04710-04210		HOSE,LH VFHM540	ホース	1	[FC][RTL][CS35][FCS35] [FCS45][FCS55]
-	04710-04215		HOSE,LH VFHM550	ホース	1	[FC][RTL][CS35][FCS35] [FCS45][FCS55]
-	04710-04230		HOSE,LH VFHM600	ホース	1	[FC][RTL][CS35][FCS35] [FCS45][FCS55]
-	04710-04255		HOSE,LH VFHM650	ホース	1	[FC][RTL][CS35][FCS35] [FCS45][FCS55]
-	04710-04275		HOSE,LH VFHM700	ホース	1	[FC][RTL][CS35][FCS35] [FCS45][FCS55]
-	04710-04290		HOSE,LH VFHM750	ホース	1	[FC][RTL][CS35][FCS35] [FCS45][FCS55]
A5	234A8-41001		REGULATOR-ASSY,FLOW	レギュレータアッセン	1	INC.35-44
35	NO PART NO.	#	PLATE	プレート	1	
36	27979-43101		SPRING	スプリング	1	
37	NO PART NO.	#	NIPPLE	ニップル	1	
38	03300-00280		O-RING	Oリング	1	
39	NO PART NO.	#	CASE	ケース	1	
40	NO PART NO.	#	SLEEVE	スリーブ	1	
41	NO PART NO.	#	PISTON	ピストン	1	
42	24459-42951		BALL,NYLON	ボール	1	
43	214A8-44151		SPRING	スプリング	1	
44	02110-00018		RING,SNAP	スナップリング	1	
45	03320-00180		O-RING	Oリング	1	
46	277T0-92131		HOSE	ホース	1	
47	23678-40110		TUBE	チューブ	1	
-	04710-04125		HOSE	ホース	1	[FC][RTL][CS35][FCS35] [FCS45][FCS55]
48	04911-00018		CLIP	クリップ	1	
-	04911-00021		CLIP	クリップ	1	[FC][RTL][CS35][FCS35] [FCS45][FCS55]
49	04914-00016		CLIP	クリップ	1	
-	04911-00021		CLIP	クリップ	1	[FC][RTL][CS35][FCS35] [FCS45][FCS55]

PARTS NUMBER INDEX

Part No.	Fig.No.	Part No.	Fig.No.	Part No.	Fig.No.	Part No.	Fig.No.
B-B3613-13001	82	B-21011-31702	181	B-23451-02212	82	B-30697-51102	215
B-B3613-13001	83	B-21011-31702	181	B-23451-02212	83	B-30697-51201	215
B-B6127-20612	200	B-21011-31702	181	B-23641-00313	82	B-30697-51202	215
B-B6341-01401	200	B-21011-32404	179	B-23641-00313	83	B-30697-51301	215
B-B6351-01401	200	B-21011-32404	180	B-23641-01609	82	B-30697-51302	215
B-B670B-00086	200	B-21011-32404	181	B-23641-01609	83	B-30697-51401	215
B-B670B-00087	200	B-21011-32404	181	B-23641-01610	82	B-30697-51402	215
B-C0003-30301	175	B-21011-32404	181	B-23641-01610	83	B-30697-51501	215
B-C0003-30301	176	B-21011-32801	179	B-23641-02218	82	B-30697-51502	215
B-C0003-30301	177	B-21011-32801	180	B-23641-02218	83	B-30697-51601	215
B-21001-00106	178	B-21011-32801	181	B-23641-02227	82	B-30697-51602	215
B-21001-00106	179	B-21011-32801	181	B-23641-02227	83	B-30697-51701	215
B-21001-00106	180	B-21011-32801	181	B-23641-02508	82	B-30697-51702	215
B-21001-00106	181	B-21013-36432	174	B-23641-02508	83	B-30697-51801	215
B-21001-00106	181	B-21013-36432	175	B-23641-03314	82	B-30697-51802	215
B-21001-00106	181	B-21013-36432	176	B-23641-03314	83	B-30697-51901	215
B-21001-00689	179	B-21013-36432	177	B-23641-03716	82	B-30697-51902	215
B-21001-00689	180	B-21013-36432	179	B-23641-03716	82	B-30697-52001	215
B-21001-00689	181	B-21013-36433	174	B-23641-03716	83	B-30697-52002	215
B-21001-00689	181	B-21013-36433	175	B-23641-03716	83	B-30697-52101	215
B-21001-00689	181	B-21013-36433	176	B-23641-04303	82	B-30697-52102	215
B-21001-90408	179	B-21013-36433	177	B-23641-04303	83	B-30697-52201	215
B-2101A-30016	174	B-21013-36433	180	B-23642-00911	82	B-30697-52202	215
B-2101A-30016	175	B-21013-37344	174	B-23642-00911	83	B-30697-52301	215
B-2101A-30016	176	B-21013-37344	175	B-23643-00296	82	B-30697-52302	215
B-2101A-30016	177	B-21013-37344	176	B-23643-00296	83	B-30697-52401	215
B-21011-30134	174	B-21013-37344	177	B-23643-00526	82	B-30697-52402	215
B-21011-30134	175	B-21013-37344	178	B-23643-00526	83	B-30697-52501	215
B-21011-30134	176	B-21013-37349	174	B-23643-00618	82	B-30697-52502	215
B-21011-30134	177	B-21013-37349	175	B-23643-00618	83	B-30697-52601	215
B-21011-30507	179	B-21013-37349	175	B-23711-01922	82	B-30697-52602	215
B-21011-30507	181	B-21013-37349	176	B-23711-01922	83	B-30697-52701	215
B-21011-30507	181	B-21013-37349	176	B-23711-03701	82	B-30697-52702	215
B-21011-30507	181	B-21013-37349	177	B-23711-03701	83	B-30697-52801	215
B-21011-30528	180	B-21013-37349	177	B-30121-50102	215	B-30697-52802	215
B-21011-30603	179	B-21013-37349	178	B-30131-40017	215	B-30697-52901	215
B-21011-30603	180	B-21013-39701	175	B-30131-50018	215	B-30697-52902	215
B-21011-30603	181	B-21013-39701	176	B-30141-35012	200	B-3070A-00103	200
B-21011-30603	181	B-21013-39701	177	B-30141-91049	215	B-3070B-00217	200
B-21011-30603	181	B-21013-39701	181	B-30151-03006	200	B-30961-03012	200
B-21011-30604	179	B-21013-39701	181	B-30161-50046	215	B-30961-04012	215
B-21011-30604	180	B-21013-39701	181	B-30161-91774	215	B-91111-60102	179
B-21011-30604	181	B-21021-30103	175	B-30191-30025	200	B-91111-60102	180
B-21011-30604	181	B-21021-30104	175	B-30191-40025	215	B-91111-60102	181
B-21011-30604	181	B-21031-30103	176	B-30286-95303	215	B-91111-60102	181
B-21011-30618	180	B-21031-30104	176	B-30286-95303	215	B-91111-60102	181
B-21011-30702	179	B-21041-30103	177	B-30286-95303	215	B-91511-08180	178
B-21011-30702	180	B-21041-30104	177	B-30286-95303	215	B-92703-06181	178
B-21011-30702	181	B-21731-30306	178	B-30286-95303	215	B-92703-06181	179
B-21011-30702	181	B-21731-30307	178	B-30296-11903	215	B-92703-06181	180
B-21011-30702	181	B-21731-30406	178	B-30296-11903	215	B-92703-06181	181
B-21011-31011	179	B-21731-30502	178	B-30311-01403	200	B-92703-06181	181
B-21011-31011	180	B-21731-30613	178	B-30421-30005	200	B-92703-06181	181
B-21011-31011	181	B-21731-30703	178	B-30431-35009	200	B-93118-08652	174
B-21011-31011	181	B-21731-30802	178	B-30461-50039	215	B-93118-08652	175
B-21011-31011	181	B-21733-40212	178	B-3050A-00093	215	B-93118-08652	176
B-21011-31105	174	B-23451-02016	82	B-3050B-00119	215	B-93118-08652	177
B-21011-31106	174	B-23451-02016	83	B-30551-91003	215	B-93128-10082	174
B-21011-31702	179	B-23451-02106	82	B-3065B-00211	200	B-93128-10082	175
B-21011-31702	180	B-23451-02106	83	B-30697-51101	215	B-93128-10082	176

PARTS NUMBER INDEX

Part No.	Fig.No.	Part No.	Fig.No.	Part No.	Fig.No.	Part No.	Fig.No.
B-93128-10082	177	01100-10030	131	01103-14040	215	01183-08016	153
B-93364-08052	178	01100-10030	132	01103-14040	223	01183-08016	158
B-94101-20512	82	01100-10030	134	01103-16065	214	01183-08016	3
B-94101-20512	83	01100-12020	122	01103-16065	220	01183-08016	4
B-94721-38151	82	01100-12030	86	01103-16065	228	01183-08016	21
B-94721-38151	83	01100-12030	88	01106-12040	78	01183-08016	22
B-95111-01200	178	01100-12045	21	01106-12040	78A	01183-08016	65
B-95112-06000	200	01100-12070	231	01109-08020	20	01183-08016	69
B-95113-01800	179	01100-14025	213	01109-12030	152	01183-08016	86
B-95113-02400	178	01100-14025	213	01110-30090	149	01183-08016	88
B-95121-06000	82	01100-14025	219	01110-30150	148	01183-08020	195
B-95121-06000	82	01100-14025	227	01110-30150	150	01183-08020	198
B-95121-06000	83	01100-14030	213	01110-30150	150	01183-08020	199
B-95121-06000	83	01100-14030	219	01110-30150	150	01183-08020	1
B-95121-07000	200	01100-14030	219	01110-30150	151	01183-08022	21
B-95133-00500	180	01100-14030	227	01113-30230	151	01183-08025	195
B-95151-06300	82	01100-14030	227	01113-30300	151	01183-08035	69
B-95151-06300	83	01100-14035	112	01120-08035	127	01183-08045	1
B-95713-06000	200	01100-14035	219	01120-08035	127	01183-08045	64
B-96111-10613	200	01100-14035	227	01120-08035	128	01183-08045	68
B-96401-30159	200	01100-16016	222	01120-08035	129	01183-08050	1
B-97123-01111	178	01100-16016	230	01120-08035	130	01183-10025	51
LB24H8-10131	217	01100-16055	228	01120-10035	127	01184-10016	66
R-400-50647-03	170	01100-16065	142	01123-10045	66	01184-10020	133
R-402-00012-12	170	01100-16075	222	01141-06012	86	01184-10020	167
R-402-00710-12	172	01100-16075	230	01141-06012	87	01184-10020	168
R-402-65004-28	172	01100-20080	89	01141-06012	87	01184-10020	168
R-403-24323	172	01103-08016	65	01141-06012	87	01184-10020	220
01030-04014	54	01103-08016	69	01141-06012	88	01184-10020	223
01030-04020	59	01103-08016	87	01170-04012	20	01184-10020	232
01030-05065	41	01103-08020	66	01170-05045	75	01184-10025	132
01033-05014	28	01103-08020	70	01170-05045	75A	01184-10025	134
01033-05014	29	01103-08025	75	01171-06025	117	01184-10025	57
01044-04014	54	01103-08025	75A	01181-08016	154	01184-10025	73
01066-08008	65	01103-08035	72	01182-10030	24	01184-10025	76
01066-08008	69	01103-08040	71	01183-05010	146	01184-10030	131
01066-08008	74	01103-08045	72	01183-05010	147	01184-10030	132
01066-10012	200	01103-08045	75	01183-05010	20	01184-10030	132
01066-10012	200	01103-08060	75	01183-05012	210	01184-10030	133
01100-05010	1	01103-08060	75A	01183-05012	210	01184-10030	134
01100-05010	2	01103-10016	70	01183-06012	183	01184-10030	134
01100-06012	125	01103-10020	222	01183-06012	184	01184-10030	135
01100-06012	126	01103-10020	230	01183-06012	185	01184-10030	136
01100-06020	59	01103-10020	67	01183-06012	186	01184-10030	137
01100-06055	188	01103-10030	66	01183-06016	146	01184-10030	138
01100-06055	189	01103-10030	68	01183-06016	147	01184-10030	64
01100-06055	190	01103-10030	71	01183-06016	224	01184-10030	70
01100-06055	191	01103-10035	68	01183-06016	232	01184-10035	64
01100-08020	42	01103-10035	68	01183-06016	30	01184-10035	64
01100-08020	45	01103-10040	68	01183-06016	31	01184-10035	70
01100-08020	46	01103-10050	68	01183-06025	30	01184-10040	64
01100-08020	47	01103-10060	132	01183-06025	31	01184-10050	64
01100-08020	48	01103-10060	134	01183-08016	121	01184-10050	70
01100-08020	49	01103-10065	71	01183-08016	122	01184-10050	70
01100-08020	61	01103-10097	1	01183-08016	123	01184-10055	132
01100-08020	62	01103-10105	2	01183-08016	123	01184-10055	134
01100-08025	124	01103-10120	127	01183-08016	125	01184-10060	232
01100-08045	21	01103-10120	128	01183-08016	126	01184-12025	212
01100-08045	22	01103-10120	129	01183-08016	132	01184-12025	218
01100-08050	141	01103-10120	130	01183-08016	134	01184-12025	226

. PARTS NUMBER INDEX

Part No.	Fig.No.	Part No.	Fig.No.	Part No.	Fig.No.	Part No.	Fig.No.
01184-12030	82	01213-10025	65	01400-00012	125	01412-10016	88
01184-12030	83	01213-10025	69	01400-00012	126	01412-10016	88
01184-12040	212	01218-10025	1	01400-00012	231	01412-10020	111
01184-12040	218	01219-12030	2	01400-00018	215	01412-10020	113
01184-12040	226	01400-00004	59	01400-00018	222	01420-00006	32
01184-12050	212	01400-00006	125	01400-00018	230	01420-00006	33
01184-12050	218	01400-00006	126	01400-00018	231	02000-00004	20
01185-06012	20	01400-00006	131	01400-10016	92	02000-00004	59
01185-06016	28	01400-00006	132	01400-10016	94	02000-00005	183
01185-06016	29	01400-00006	133	01400-10016	96	02000-00005	184
01185-08016	198	01400-00006	134	01400-10016	98	02000-00005	185
01185-08016	199	01400-00006	158	01400-10020	78	02000-00005	186
01185-08016	6	01400-00006	2	01400-10020	78A	02000-00006	125
01185-08016	8	01400-00006	30	01400-20008	18	02000-00006	125
01185-08016	9	01400-00006	31	01400-20010	19	02000-00006	126
01185-08016	10	01400-00006	59	01400-20010	24	02000-00006	126
01185-08016	12	01400-00006	60	01400-30008	24	02000-00006	133
01185-08016	13	01400-00006	62	01402-00008	124	02000-00006	158
01185-08016	14	01400-00008	141	01402-00008	127	02000-00006	2
01185-08016	15	01400-00008	167	01402-00008	127	02000-00008	131
01185-08016	20	01400-00008	167	01402-00008	128	02000-00008	132
01185-08016	21	01400-00008	168	01402-00008	129	02000-00008	134
01185-08016	21	01400-00008	169	01402-00008	130	02000-00008	153
01185-08016	22	01400-00008	169	01402-00008	131	02000-00008	154
01185-08016	30	01400-00008	1	01402-00008	131	02000-00008	155
01185-08016	31	01400-00008	2	01402-00010	127	02000-00008	156
01185-08016	32	01400-00008	21	01402-00010	131	02000-00008	156
01185-08016	33	01400-00008	42	01402-00010	132	02000-00008	157
01185-08016	40	01400-00008	45	01402-00010	134	02000-00008	167
01185-08016	50	01400-00008	46	01402-00010	169	02000-00008	1
01185-08020	153	01400-00008	47	01402-00010	169	02000-00008	2
01185-08020	157	01400-00008	48	01402-00010	173	02000-00008	18
01185-08020	12	01400-00008	49	01402-00010	211	02000-00008	21
01185-08020	14	01400-00008	50	01402-00010	217	02000-00008	21
01185-08020	46	01400-00008	54	01402-00010	225	02000-00008	22
01185-08020	49	01400-00008	61	01402-00012	86	02000-00008	87
01185-08020	71	01400-00008	62	01402-00012	88	02000-00010	131
01185-08030	21	01400-00008	64	01402-00014	80	02000-00010	132
01185-10030	170	01400-00008	68	01402-00014	81	02000-00010	133
01185-10030	172	01400-00008	69	01402-00022	85	02000-00010	134
01186-06012	159	01400-00010	131	01402-00022	85	02000-00010	153
01186-06012	159	01400-00010	132	01402-00024	111	02000-00010	169
01186-08020	51	01400-00010	133	01402-00024	111	02000-00010	169
01186-08025	57	01400-00010	134	01402-00024	113	02000-00010	173
01186-10016	198	01400-00010	51	01402-00024	113	02000-00010	11
01186-10016	199	01400-00010	51	01402-10010	82	02000-00010	18
01186-10020	158	01400-00010	51	01402-10010	83	02000-00010	19
01186-10020	232	01400-00010	64	01402-10018	111	02000-00010	19
01186-10020	51	01400-00010	66	01402-10018	113	02000-00010	20
01186-10030	171	01400-00010	68	01407-00022	111	02000-00010	24
01186-10030	91	01400-00010	70	01407-00022	113	02000-00010	67
01186-12025	117	01400-00010	70	01412-00030	86	02000-00010	86
01186-12025	118	01400-00010	86	01412-00030	87	02000-00010	87
01186-12025	119	01400-00010	87	01412-00030	88	02000-00010	88
01186-12025	120	01400-00010	88	01412-10016	111	02000-00010	91
01186-12030	152	01400-00010	91	01412-10016	113	02000-00012	21
01186-12035	117	01400-00012	104	01412-10016	85	02000-00012	80
01186-12035	155	01400-00012	106	01412-10016	85	02000-00016	125
01186-12045	21	01400-00012	108	01412-10016	86	02000-00016	126
01186-12045	22	01400-00012	110	01412-10016	86	02000-00016	132

PARTS NUMBER INDEX

Part No.	Fig.No.	Part No.	Fig.No.	Part No.	Fig.No.	Part No.	Fig.No.
02000-00016	133	02010-00010	86	02011-00014	215	02200-16010	183
02000-00016	134	02010-00010	87	02011-00014	223	02200-16010	184
02000-00016	222	02010-00010	88	02011-00016	214	02200-16010	185
02000-00016	230	02010-00012	122	02011-00016	220	02200-16010	186
02000-00016	230	02010-00012	231	02011-00016	228	02200-32020	132
02000-00022	66	02010-00012	21	02011-00016	92	02200-32020	134
02000-00024	65	02010-00014	112	02011-00016	94	02200-32025	131
02000-00027	69	02010-00014	213	02011-00016	96	02200-32025	132
02000-00030	86	02010-00014	213	02011-00016	98	02200-32025	133
02000-00030	87	02010-00014	219	02013-00008	20	02200-32025	134
02000-00030	88	02010-00014	219	02013-00008	24	02200-32032	111
02000-20010	152	02010-00014	227	02013-00012	152	02200-32032	113
02000-20010	159	02010-00014	227	02100-00012	75	02200-32032	85
02000-20010	215	02010-00016	142	02100-00012	75A	02200-32032	85
02000-20010	215	02010-00016	222	02100-00020	84	02200-32032	86
02000-20010	223	02010-00016	222	02100-00022	66	02200-32032	86
02000-20010	231	02010-00016	228	02100-00025	65	02200-32032	88
02000-20010	231	02010-00016	230	02100-00025	69	02200-32032	88
02000-20016	222	02010-00016	230	02100-00028	69	02212-06016	72
02001-00008	24	02010-00020	89	02100-00030	67	02212-10020	112
02001-00012	152	02010-00030	148	02100-00030	73	02212-10020	78
02002-00010	127	02010-00030	149	02100-00040	215	02212-10020	78A
02002-00010	128	02010-00030	150	02100-00040	222	02212-10025	75
02002-00010	129	02010-00030	150	02100-00040	230	02212-10025	75A
02002-00010	130	02010-00030	150	02100-00040	231	02212-12020	66
02003-20010	71	02010-00030	151	02100-00040	67	02212-12020	71
02010-00004	54	02010-10006	86	02100-00040	74	02262-06015	125
02010-00004	59	02010-10006	87	02100-00045	212	02262-06015	126
02010-00005	1	02010-10006	87	02100-00045	218	02262-06025	133
02010-00005	2	02010-10006	87	02110-00018	216	02262-08020	132
02010-00006	125	02010-10006	88	02110-00018	224	02262-08020	134
02010-00006	126	02010-20010	215	02110-00018	232	02262-08025	131
02010-00006	158	02010-20010	215	02110-00030	75	02262-10030	131
02010-00006	188	02010-20010	223	02110-00030	75A	02262-10030	132
02010-00006	189	02010-20010	231	02110-00037	84	02262-10030	133
02010-00006	190	02010-20010	231	02110-00062	112	02262-10030	134
02010-00006	191	02011-00008	65	02110-00090	231	02270-01014	216
02010-00006	2	02011-00008	66	02120-00050	67	02270-01014	224
02010-00006	32	02011-00008	69	02121-00058	74	02270-01014	232
02010-00006	33	02011-00008	70	02121-00080	67	02360-05019	66
02010-00006	59	02011-00008	71	02200-02016	132	02360-05019	69
02010-00008	141	02011-00008	75	02200-02016	134	02432-01008	202
02010-00008	167	02011-00008	75A	02200-02020	131	02432-01008	226
02010-00008	167	02011-00008	87	02200-03030	215	03000-06207	67
02010-00008	168	02011-00010	127	02200-03030	222	03000-06208	67
02010-00008	169	02011-00010	128	02200-03030	230	03000-06213	77
02010-00008	169	02011-00010	129	02200-03030	231	03000-06306	67
02010-00008	1	02011-00010	130	02200-04025	125	03000-06306	73
02010-00008	2	02011-00010	222	02200-04025	126	03000-06306	74
02010-00008	18	02011-00010	230	02200-04025	132	03000-06306	74
02010-00008	21	02011-00010	66	02200-04025	133	03010-06904	84
02010-00008	22	02011-00010	68	02200-04025	134	03042-06308	231
02010-00008	54	02011-00010	70	02200-04040	111	03071-30207	86
02010-00008	64	02011-00010	71	02200-04040	113	03071-30207	87
02010-00008	68	02011-00012	104	02200-04040	149	03071-30207	88
02010-00010	132	02011-00012	106	02200-06055	86	03071-30211	86
02010-00010	134	02011-00012	108	02200-06055	87	03071-30211	87
02010-00010	173	02011-00012	110	02200-06055	88	03071-30211	88
02010-00010	19	02011-00012	78	02200-16010	125	03071-30214	78
02010-00010	24	02011-00012	78A	02200-16010	126	03071-30214	78A

PARTS NUMBER INDEX

Part No.	Fig.No.	Part No.	Fig.No.	Part No.	Fig.No.	Part No.	Fig.No.
03126-83201	86	03320-00180	223	04691-04150	191	04710-04190	216
03126-83201	87	03320-00180	224	04691-04180	189	04710-04190	232
03126-83201	88	03320-00180	232	04710-04005	145	04710-04195	232
03146-13201	86	03320-00180	232	04710-04018	199	04710-04200	216
03146-13201	86	03320-00180	232	04710-04030	188	04710-04200	216
03146-13201	87	03320-00240	224	04710-04030	189	04710-04210	216
03146-13201	88	03320-00240	232	04710-04030	190	04710-04210	216
03146-13201	88	03320-00280	216	04710-04030	191	04710-04210	216
03190-00006	222	03320-00280	224	04710-04040	198	04710-04210	232
03190-00006	223	03320-00290	170	04710-04040	199	04710-04210	232
03190-00006	223	03320-00290	171	04710-04050	198	04710-04215	216
03190-00006	230	03320-00290	172	04710-04060	198	04710-04215	232
03190-00013	66	03320-00290	173	04710-04060	216	04710-04225	232
03192-00012	78	03320-00340	223	04710-04070	216	04710-04230	216
03192-00012	78A	03320-00340	231	04710-04080	232	04710-04230	232
03192-10012	78	03340-00140	170	04710-04085	216	04710-04240	216
03192-10012	78A	03340-00140	171	04710-04092	199	04710-04245	216
03217-08501	86	03340-00140	172	04710-04095	216	04710-04255	216
03217-08501	87	03350-00450	111	04710-04095	216	04710-04255	232
03217-08501	88	03350-00450	113	04710-04095	232	04710-04265	216
03300-00160	66	03350-00850	222	04710-04102	188	04710-04270	216
03300-00280	232	03350-00850	230	04710-04102	189	04710-04275	232
03310-00300	66	04000-00300	198	04710-04102	190	04710-04280	216
03310-00600	65	04000-00300	199	04710-04102	191	04710-04290	232
03310-00600	69	04134-20404	188	04710-04105	232	04710-04310	216
03310-00800	76	04134-20404	189	04710-04110	216	04710-04335	216
03320-00110	112	04134-20404	190	04710-04120	216	04901-00100	200
03320-00110	132	04134-20404	191	04710-04120	232	04901-00100	214
03320-00110	134	04138-00303	53	04710-04121	188	04901-00100	220
03320-00110	195	04150-00404	232	04710-04121	189	04901-00100	228
03320-00140	182	04150-20202	132	04710-04121	190	04901-00100	65
03320-00140	188	04150-20202	134	04710-04121	191	04901-00100	86
03320-00140	189	04150-20404	172	04710-04125	216	04901-00100	88
03320-00140	190	04150-20404	173	04710-04125	216	04901-00160	65
03320-00140	191	04150-20404	189	04710-04125	216	04901-00190	86
03320-00140	216	04150-20404	191	04710-04125	232	04901-00190	87
03320-00140	216	04150-30404	182	04710-04130	232	04901-00190	88
03320-00140	224	04601-44200	232	04710-04135	216	04901-00191	86
03320-00140	224	04601-44224	232	04710-04140	192	04901-00191	87
03320-00140	224	04601-44249	232	04710-04140	194	04901-00191	88
03320-00140	232	04601-44279	232	04710-04145	216	04911-00016	1
03320-00140	232	04601-44299	232	04710-04145	216	04911-00018	216
03320-00140	232	04601-44323	232	04710-04145	216	04911-00018	216
03320-00180	170	04601-44331	232	04710-04145	216	04911-00018	216
03320-00180	171	04601-44367	232	04710-04145	232	04911-00018	232
03320-00180	172	04601-44410	232	04710-04145	232	04911-00018	232
03320-00180	172	04601-44453	232	04710-04150	216	04911-00018	232
03320-00180	172	04601-44485	232	04710-04150	232	04911-00020	192
03320-00180	173	04691-02065	188	04710-04160	216	04911-00020	193
03320-00180	173	04691-02065	189	04710-04160	216	04911-00020	194
03320-00180	173	04691-02065	190	04710-04160	232	04911-00021	188
03320-00180	182	04691-02065	191	04710-04165	193	04911-00021	189
03320-00180	182	04691-04048	188	04710-04165	216	04911-00021	190
03320-00180	188	04691-04048	188	04710-04165	232	04911-00021	191
03320-00180	189	04691-04048	189	04710-04170	216	04911-00021	192
03320-00180	189	04691-04048	190	04710-04170	232	04911-00021	193
03320-00180	190	04691-04048	190	04710-04175	216	04911-00021	194
03320-00180	191	04691-04048	191	04710-04185	216	04911-00021	198
03320-00180	191	04691-04105	189	04710-04185	232	04911-00021	199
03320-00180	216	04691-04108	188	04710-04190	216	04911-00021	216

PARTS NUMBER INDEX

Part No.	Fig.No.	Part No.	Fig.No.	Part No.	Fig.No.	Part No.	Fig.No.
04911-00021	216	04913-11200	84	06711-70012	93	09001-10057	230
04911-00021	216	04913-11380	122	06711-70012	94	09001-10057	231
04911-00021	232	04913-11380	193	06711-70012	95	09001-10059	215
04911-00021	232	04913-20380	196	06712-60009	104	09001-10059	222
04911-00021	232	04913-20380	197	06712-60009	105	09001-10059	222
04911-00022	52	04913-21380	216	06712-60009	106	09001-10059	230
04911-00022	53	04913-21380	232	06712-60009	107	09001-10063	215
04911-00024	1	04914-00016	216	06731-00120	100	09001-10063	215
04911-00032	198	04914-00016	232	06731-00120	102	09001-10063	231
04911-00032	199	04914-00019	145	06804-70012	99	09001-10065	222
04911-00040	188	04914-00019	198	06806-55015	101	09001-10065	230
04911-00040	189	04914-00019	199	06806-60009	108	09001-10065	231
04911-00040	190	04914-00019	224	06806-60009	108	09001-10067	215
04911-00040	191	06001-55015	100	06806-60009	109	09001-10069	215
04911-00044	188	06001-60009	106	06806-70012	103	09001-10069	215
04911-00044	189	06001-60009	107	06806-70012	103	09001-10069	222
04911-00044	190	06001-70012	102	06806-70012	96	09001-10069	231
04911-00044	191	06001-70012	102	06806-70012	96	09001-10071	215
04911-00044	8	06001-70012	94	06806-70012	97	09001-10071	230
04911-00044	9	06001-70012	95	06807-60009	108	09001-10071	231
04911-00044	10	06005-55015	100	06807-60009	108	09001-10073	222
04911-00046	188	06005-60009	106	06807-70012	96	09001-10075	215
04911-00046	189	06005-60009	107	06807-70012	96	09001-10077	222
04911-00046	190	06005-70012	102	06841-55015	101	09001-10077	231
04911-00046	191	06005-70012	102	06841-60009	108	09001-10079	215
04911-00055	6	06005-70012	94	06841-70012	103	09001-10079	230
04911-00055	9	06005-70012	95	06841-70012	103	09001-10081	222
04911-00055	10	06006-55015	100	06841-70012	96	09001-10083	215
04911-00060	5	06006-60009	104	06843-55015	101	09001-10083	230
04911-00060	6	06006-60009	105	06843-60009	108	09001-10083	231
04911-00060	16	06006-60009	106	06843-70012	103	09001-10087	215
04911-00065	5	06006-60009	107	06843-70012	103	09001-10089	222
04911-00070	6	06006-70012	102	06843-70012	96	09001-10091	215
04911-00075	6	06006-70012	102	06851-55015	101	09001-10091	231
04911-00090	7	06006-70012	92	06851-60009	108	09001-10095	231
04913-10100	28	06006-70012	93	06851-70012	103	09001-10097	222
04913-10100	29	06006-70012	94	06851-70012	103	09001-10101	215
04913-10200	28	06006-70012	95	06851-70012	96	09001-10109	215
04913-10200	29	06007-55015	100	09001-10035	222	09192-30044	214
04913-10200	30	06007-60009	106	09001-10037	230	09192-30044	220
04913-10200	59	06007-60009	107	09001-10039	222	09192-30044	228
04913-11100	28	06007-70012	102	09001-10041	222	09192-30044	228
04913-11100	29	06007-70012	102	09001-10041	230	10113-40171	67
04913-11100	41	06007-70012	94	09001-10043	215	110F7-10271	170
04913-11120	42	06007-70012	95	09001-10045	222	110F7-12001	170
04913-11120	43	06701-55015	100	09001-10045	222	11243-82081	74
04913-11120	44	06701-70012	102	09001-10045	230	11243-82091	74
04913-11120	45	06701-70012	102	09001-10047	215	11243-82161	74
04913-11120	45	06701-70012	92	09001-10047	222	11243-82181	74
04913-11120	45	06701-70012	93	09001-10049	231	11243-82211	74
04913-11200	132	06701-70012	94	09001-10051	215	113A3-12001	65
04913-11200	133	06701-70012	95	09001-10051	222	114A3-10501	65
04913-11200	134	06702-60009	104	09001-10051	222	114A3-12012	65
04913-11200	135	06702-60009	105	09001-10051	230	114A3-12012	69
04913-11200	28	06702-60009	106	09001-10053	215	114L3-12022	69
04913-11200	29	06702-60009	107	09001-10053	230	114L3-12031	69
04913-11200	52	06711-55015	100	09001-10053	231	115G3-82111	73
04913-11200	53	06711-70012	102	09001-10055	215	115G3-82241	73
04913-11200	82	06711-70012	102	09001-10055	222	115G3-82251	73
04913-11200	83	06711-70012	92	09001-10057	222	115G3-82331	74

PARTS NUMBER INDEX

Part No.	Fig.No.	Part No.	Fig.No.	Part No.	Fig.No.	Part No.	Fig.No.
115G3-82341	74	131N3-12031	69	134B3-80281	73	139B3-89801	75A
115G3-82351	74	131N3-12041	69	134B3-82001	71	139B3-89811	75A
115G3-82361	74	131N3-12101	69	134B3-82011	71	139H2-50001	68
115G3-82401	74	131N3-12151	69	134B3-82021	71	139H3-10301	69
115G3-82411	74	134A3-10201	65	134B3-82031	71	139H7-10301	173
115G3-82451	73	134A3-10211	65	134B3-82041	71	14354-12211	82
115G3-82471	67	134A3-12001	65	134B3-82051	71	14354-12211	83
115G3-82471	73	134A3-12011	65	134B3-82091	72	14354-12221	82
115G3-82491	75	134A3-12021	65	134B3-82101	71	14354-12221	83
115G3-82491	75A	134A3-12021	69	134B3-82141	73	14354-12251	82
115G3-82512	75	134A3-12031	65	134B3-82281	71	14354-12251	83
115G3-82512	75A	134A3-12051	66	134B3-82291	71	14354-12261	82
115G3-82522	75	134A3-22001	76	134B3-82301	71	14354-12261	83
115G3-82522	75A	134A3-22011	76	134B3-82311	71	14354-12271	80
115G3-82641	67	134A3-22021	76	134B3-82321	71	14354-12271	81
115G3-82641	73	134A3-22031	76	134B3-82401	74	14354-12321	82
115G3-82651	73	134A3-22041	76	134B3-89821	71	14354-12321	83
115G3-82671	73	134A3-40201	66	134B3-89821	73	14453-52071	77
116H3-82101	71	134A3-40221	67	134B3-89861	72	14453-52081	77
116H3-82101	73	134A3-42011	66	134G3-80201	74	15533-10301	65
116H3-82201	73	134A3-42011	73	134G3-80251	74	15573-42011	67
116H3-82201	75	134A3-42021	66	134G3-80301	71	15573-42151	66
116H3-82201	75A	134A3-42031	66	134G3-80401	72	15573-42151	78
116W7-10301	172	134A3-42051	67	134G3-82001	72	15573-42151	78A
12003-12021	65	134A3-42071	67	134G3-82101	74	15583-82141	72
12003-42052	66	134A3-42081	67	134G3-82111	74	15583-82161	72
12003-42061	66	134A3-42101	67	134G3-82121	74	15583-82172	72
12003-42281	67	134A3-42111	67	134G3-82131	74	15583-82181	72
12003-42291	67	134A3-42121	67	134G3-82141	74	15583-82211	72
12003-42311	67	134A3-42131	67	134G3-89811	74	15583-82241	72
12003-42311	73	134A3-42141	67	134G3-89831	74	15583-82441	73
12003-42311	76	134A3-42151	67	134G3-89851	72	15583-82451	73
12003-42321	67	134A3-42161	67	134H3-10201	69	15583-82461	73
12003-42321	73	134A3-42171	67	134H3-10211	69	15583-82521	71
12003-42321	76	134A3-42181	67	134H3-12001	69	15583-82541	71
12003-42331	67	134A3-42191	67	134H3-12011	69	15583-82571	75
12003-42331	73	134A3-42201	67	134H3-12022	69	15583-82571	75A
12003-42331	76	134A3-42211	67	135L3-82001	75	15604-10202	84
12003-42421	66	134A3-42221	66	135L3-82001	75A	15793-82321	75
12003-42451	66	134A3-42221	73	13683-82022	71	15793-82321	75A
12003-42461	66	134A3-42251	67	137A2-50001	64	15793-82341	75
12003-43031	67	134A3-42261	67	137A2-50041	64	15793-82341	75A
12003-43031	73	134A3-42271	67	137B2-50001	70	15913-42511	67
12163-82221	73	134A3-42301	67	137B2-50002	70	15943-82651	75
12163-82232	73	134A3-42321	67	137B3-80201	71	15943-82651	75A
12163-82541	66	134A3-42331	67	137B3-80211	71	15943-82661	75
12163-82541	69	134A3-42401	66	137H2-50001	68	15943-82661	75A
12163-82541	71	134A3-42411	66	139A2-50001	64	15943-82701	69
12163-82541	73	134A3-42421	66	139A2-50041	64	15943-82731	75
12163-82561	72	134A3-42431	66	139A3-10201	65	15943-82741	75
12163-82561	72	134A3-42451	66	139A3-42001	67	15943-82751	75
12163-82621	71	134A3-48911	65	139A3-42011	67	16113-52121	77
124G3-12011	65	134A3-48911	66	139A7-10101	171	16113-52141	77
124G3-52011	77	134A3-48911	67	139B3-80201	75A	16402-54331	58
124T3-43001	67	134A3-48911	76	139B3-82111	75A	16402-54331	60
124U3-82081	73	134A3-52001	77	139B3-82121	75A	16402-54331	61
124U3-82091	73	134A3-52041	77	139B3-82131	75A	16402-54331	62
124U3-82521	73	134A3-52051	77	139B3-82141	75A	16402-54331	73
131M2-52001	71	134A3-52061	77	139B3-82151	75A	19502-52551	69
131N3-12011	69	134A3-59801	77	139B3-82161	75A	20224-30061	86

PARTS NUMBER INDEX

Part No.	Fig.No.	Part No.	Fig.No.	Part No.	Fig.No.	Part No.	Fig.No.
20224-30061	88	214A0-51751	223	214A2-42611	31	214A5-33052	131
205A2-63311	59	214A0-51761	223	214A2-42611	46	214A5-33062	131
20712-40275	30	214A0-51771	223	214A2-42611	47	214A5-52121	141
20712-40275	31	214A0-51781	223	214A2-42611	48	214A5-52131	141
20802-51301	196	214A0-51791	223	214A2-42611	49	214A5-52241	141
20802-51301	197	214A0-51801	223	214A2-42611	60	214A5-53012	203
209K2-40501	29	214A0-51811	223	214A2-42611	61	214A6-12601	89
209K2-43001	28	214A0-51821	223	214A2-42611	62	214A6-12611	89
209K2-43001	29	214A0-51831	223	214A2-42611	63	214A6-42121	154
209K4-10601	81	214A0-51841	223	214A2-42621	30	214A6-42121	155
209K4-10801	80	214A0-51851	223	214A2-42621	31	214A6-42252	152
209K4-10801	81	214A0-51861	223	214A2-44001	40	214A6-42252	160
209K4-12301	81	214A0-51871	223	214A2-44501	41	214A6-42252	161
209K4-12501	80	214A0-51881	223	214A2-44511	41	214A6-42252	161
209K4-12501	81	214A0-53681	223	214A2-52002	64	214A6-42252	161
209K4-12511	80	214A0-53681	223	214A2-52002	68	214A6-42252	161
209K4-12511	81	214A0-53721	223	214A2-52012	64	214A6-42252	161
209K4-12521	80	214A0-53901	223	214A2-52012	68	214A6-42252	161
209K4-12521	81	214A0-53901	223	214A3-00301	78	214A6-42252	161
209K4-12531	80	214A0-53901	223	214A3-00301	78A	214A6-42252	162
209K4-12531	81	214A0-53901	223	214A3-02001	79	214A6-42252	163
209K4-12541	80	214A0-59821	223	214A3-02011	78	214A6-42361	164
209K4-12541	81	214A0-62151	224	214A3-02011	78A	214A6-42361	164
209K4-12561	80	214A0-82651	222	214A3-02021	78	214A6-42361	165
209K4-12561	81	214A0-82651	230	214A4-12161	80	214A6-42771	163
209P6-40301	153	214A0-82681	222	214A4-12161	81	214A6-42771	164
209P6-40401	153	214A0-82681	230	214A4-32041	86	214A6-42771	164
209P6-42831	12	214A0-82831	222	214A4-32041	87	214A6-42771	165
209P6-42831	14	214A0-82831	230	214A4-32041	88	214A6-42771	28
209P6-42841	153	214A0-93001	226	214A4-32051	86	214A6-42771	29
209P7-42161	159	214A0-93011	226	214A4-32051	87	214A6-42911	159
210F2-42011	41	214A0-93031	226	214A4-32051	88	214A7-42071	125
210F2-42021	41	214A0-93041	226	214A4-32131	86	214A7-42071	126
210F2-42031	41	214A0-93101	226	214A4-32131	88	214A7-42071	183
210F2-42201	41	214A0-93111	226	214A4-32161	86	214A7-42071	183
210F2-42211	41	214A0-93131	226	214A4-32161	87	214A7-42071	184
210F2-42221	41	214A0-93141	226	214A4-32161	88	214A7-42071	184
210F2-42231	41	214A1-02111	1	214A4-32201	89	214A7-42071	184
210F8-42631	223	214A1-02121	1	214A4-32211	89	214A7-42071	185
210F8-42631	223	214A2-12001	11	214A4-50111	111	214A7-42071	185
21152-22151	17	214A2-12011	11	214A4-50111	113	214A7-42071	185
21152-42091	30	214A2-12021	11	214A4-52021	111	214A7-42071	185
21159-12501	203	214A2-12111	11	214A4-52021	113	214A7-42071	186
212T2-42311	32	214A2-12121	11	214A4-52031	111	214A7-42071	186
21232-32551	18	214A2-12141	11	214A4-52031	113	214A7-42071	186
21232-32551	19	214A2-13001	11	214A4-52041	111	214A7-42071	186
21232-32551	20	214A2-13011	11	214A4-52041	113	214A7-42071	186
21237-52051	142	214A2-40203	41	214A4-52051	111	214A7-42171	183
21237-52051	142	214A2-42331	132	214A4-52051	113	214A7-42171	184
21237-52062	142	214A2-42331	134	214A4-59802	111	214A7-42171	185
21237-52062	142	214A2-42331	189	214A4-59802	113	214A7-42171	186
21239-12501	203	214A2-42331	8	214A5-22001	125	214A7-42181	187
213L2-52001	68	214A2-42331	36	214A5-22001	126	214A7-42181	187
213T1-02011	3	214A2-42331	37	214A5-22051	125	214A7-42181	187
213T1-02021	3	214A2-42331	38	214A5-22051	126	214A7-42181	187
214A0-51701	223	214A2-42331	39	214A5-32101	131	214A7-42191	187
214A0-51711	223	214A2-42371	56	214A5-32312	131	214A7-42201	187
214A0-51721	223	214A2-42611	1	214A5-33012	131	214A7-52081	143
214A0-51731	223	214A2-42611	11	214A5-33031	131	214A7-52081	144
214A0-51741	223	214A2-42611	30	214A5-33041	131	214A7-62131	192

PARTS NUMBER INDEX

Part No.	Fig.No.	Part No.	Fig.No.	Part No.	Fig.No.	Part No.	Fig.No.
214A7-62131	194	214A8-11001	211	216G1-02461	3	216G2-43401	30
214A8-02201	214	214A8-11001	217	216G1-02471	3	216G2-43401	31
214A8-02201	220	214A8-11001	225	216G1-02481	3	216G2-43411	30
214A8-02201	228	214A8-12001	211	216G1-02491	3	216G2-43411	31
214A8-10512	211	214A8-12001	217	216G1-02501	3	216G2-43421	30
214A8-10512	211	214A8-12001	225	216G2-22051	16	216G2-43421	31
214A8-10512	217	214A8-12011	211	216G2-22202	143	216G2-43502	41
214A8-10512	217	214A8-12011	217	216G2-22202	144	216G2-43502	46
214A8-10512	217	214A8-12011	225	216G2-22211	16	216G2-43502	47
214A8-10512	225	214A8-12021	211	216G2-40301	25	216G2-43502	48
214A8-10512	225	214A8-12021	217	216G2-40602	41	216G2-43531	41
214A8-10512	225	214A8-12021	225	216G2-40602	46	216G2-43531	46
214A8-10522	211	214A8-12031	211	216G2-40602	47	216G2-43531	47
214A8-10522	217	214A8-12031	217	216G2-40602	48	216G2-43531	48
214A8-10522	225	214A8-12031	225	216G2-40701	41	216G2-43542	41
214A8-10532	211	214A8-42661	215	216G2-40711	41	216G2-43542	46
214A8-10532	217	214A8-42661	223	216G2-40721	41	216G2-43542	47
214A8-10532	225	214A8-42661	231	216G2-40731	41	216G2-43542	48
214A8-10542	211	214A8-42721	231	216G2-42071	32	216G2-43551	41
214A8-10542	217	214A8-43081	232	216G2-42131	28	216G2-43551	46
214A8-10542	225	214A8-44151	216	216G2-42131	29	216G2-43551	47
214A8-10552	211	214A8-44151	224	216G2-42312	30	216G2-43551	48
214A8-10552	217	214A8-44151	232	216G2-42312	31	216G2-43562	41
214A8-10552	225	214A8-46001	231	216G2-42321	30	216G2-43562	46
214A8-10563	211	214A8-52051	112	216G2-42321	31	216G2-43562	47
214A8-10563	217	214A8-52221	112	216G2-43111	32	216G2-43562	48
214A8-10563	225	214A9-20101	209	216G2-43111	33	216G2-43571	41
214A8-10582	211	214A9-20101	209	216G2-43151	32	216G2-43571	46
214A8-10582	217	214L5-32101	132	216G2-43161	25	216G2-43571	47
214A8-10582	225	214L5-32101	134	216G2-43161	26	216G2-43571	48
214A8-10592	211	214T2-42311	30	216G2-43161	27	216G2-43582	41
214A8-10592	217	214T2-42311	31	216G2-43201	25	216G2-43582	46
214A8-10592	225	214T2-42321	30	216G2-43201	26	216G2-43582	47
214A8-10602	211	214T2-42321	31	216G2-43201	27	216G2-43582	48
214A8-10602	217	214T6-42091	157	216G2-43211	25	216G2-43592	41
214A8-10602	225	215B4-52122	112	216G2-43221	26	216G2-43592	46
214A8-10612	211	215B8-52022	200	216G2-43221	27	216G2-43592	47
214A8-10612	217	215E4-12231	81	216G2-43231	25	216G2-43592	48
214A8-10612	225	215E4-32341	86	216G2-43231	26	216G2-43602	41
214A8-10622	211	215E4-32341	87	216G2-43231	27	216G2-43602	46
214A8-10622	217	215E4-32341	88	216G2-43241	25	216G2-43602	47
214A8-10622	225	215E4-39801	86	216G2-43241	26	216G2-43602	48
214A8-10632	211	215E4-39801	87	216G2-43241	27	216G2-43611	41
214A8-10632	217	215E4-39801	88	216G2-43251	25	216G2-43611	46
214A8-10632	225	215E4-52231	87	216G2-43251	26	216G2-43611	47
214A8-10642	211	215E4-52301	87	216G2-43251	27	216G2-43611	48
214A8-10642	217	215E7-62091	193	216G2-43261	25	216G2-43622	41
214A8-10642	225	215E8-42171	215	216G2-43261	26	216G2-43622	46
214A8-10653	211	215E8-42171	215	216G2-43261	27	216G2-43622	47
214A8-10653	217	215E8-42171	223	216G2-43271	25	216G2-43622	48
214A8-10653	225	215E8-42171	231	216G2-43271	26	216G2-43631	41
214A8-10663	211	215E8-42171	231	216G2-43281	25	216G2-43631	46
214A8-10663	217	215E8-42181	215	216G2-43281	26	216G2-43631	47
214A8-10663	225	215E8-42181	215	216G2-43281	27	216G2-43631	48
214A8-10673	211	215E8-42181	231	216G2-43291	25	216G2-43651	30
214A8-10673	217	215E8-42181	231	216G2-43291	26	216G2-43651	31
214A8-10673	225	215E8-72181	223	216G2-43291	27	216G2-43711	30
214A8-10683	211	216G1-02111	1	216G2-43301	25	216G2-43711	31
214A8-10683	217	216G1-02111	2	216G2-43301	26	216G4-12091	28
214A8-10683	225	216G1-02451	3	216G2-43301	27	216G4-12091	29

PARTS NUMBER INDEX

Part No.	Fig.No.	Part No.	Fig.No.	Part No.	Fig.No.	Part No.	Fig.No.
216G4-12101	80	216G6-43241	134	216G8-33371	214	218G2-22001	16
216G4-12101	81	216G6-43561	152	216G8-33371	220	218G2-22051	16
216G4-12111	80	216G6-43601	158	216G8-33371	228	218G2-42001	30
216G4-12111	81	216G6-52231	159	216G8-33371	228	218G2-42001	31
216G4-12151	81	216G6-52271	159	216G8-33401	214	218G2-42101	32
216G4-12161	81	216G6-52291	153	216G8-33401	220	218G5-10111	118
216G4-12171	81	216G6-52291	159	216G8-33401	228	218G5-10121	118
216G4-12251	221	216G6-82501	168	216G8-52201	200	218G5-42011	135
216G4-12251	221	216G6-82601	168	216G8-52301	200	218G5-42011	136
216G4-12251	229	216G6-82611	168	216G8-52301	214	218G5-42011	137
216G4-12251	84	216G6-82621	168	216G8-52301	220	218G5-42011	138
216G4-12601	80	216G7-32001	174	216G8-52301	228	218G5-42021	135
216G4-12601	81	216G7-32001	175	216G8-53001	201	218G5-42021	136
216G4-12611	80	216G7-32001	176	216G8-53011	201	218G5-42021	137
216G4-12611	81	216G7-32001	177	216G8-53051	201	218G5-42021	138
216G4-12621	80	216G7-32011	174	216G9-12013	202	218G6-40521	153
216G4-12621	81	216G7-32011	175	216G9-12023	202	218G6-42301	158
216G4-12631	80	216G7-32011	176	216G9-12033	202	218G6-42451	153
216G4-12631	81	216G7-32011	177	216G9-12052	203	218G6-42471	153
216G4-12641	80	216G7-32021	174	216G9-12062	203	218G7-62111	188
216G4-12641	81	216G7-32021	175	216G9-12071	203	218H5-40521	133
216G4-12661	80	216G7-32021	176	216G9-12071	204	218H5-42521	133
216G4-12661	81	216G7-32021	177	216G9-12071	205	218M2-12301	8
216G4-12681	80	216G7-32041	174	216G9-12071	206	218M5-10401	115
216G4-12681	81	216G7-32041	175	216G9-12071	207	218M5-12501	115
216G4-12711	80	216G7-32041	176	216G9-12071	208	218M5-12501	116
216G4-12711	81	216G7-32041	177	216G9-12131	203	219M2-12301	9
216G4-12741	80	216G7-40012	183	216G9-12131	204	219M2-12301	10
216G4-12741	81	216G7-40012	184	216G9-12131	205	22018-30064	220
216G4-12751	80	216G7-40012	185	216G9-12131	206	22018-30065	214
216G4-12751	81	216G7-40012	186	216G9-12131	207	22018-30065	220
216G4-12761	80	216G7-40022	183	216G9-12131	208	22018-30065	228
216G4-12761	81	216G7-40022	184	216G9-32001	160	22132-40041	42
216G5-22081	125	216G7-40022	185	216H3-92171	153	22132-40041	42A
216G5-22081	126	216G7-40022	186	216H3-92281	183	22132-40041	43
216G5-22081	133	216G7-40032	184	216H3-92281	184	22132-40041	44
216G5-22101	126	216G7-40032	185	216H3-92281	185	22132-40041	45
216G5-32201	131	216G7-40032	186	216H3-92281	186	22132-40041	45
216G5-32311	131	216G7-40042	185	216H3-92291	135	22132-40041	45
216G5-32321	131	216G7-40042	186	216H3-92291	136	22132-40202	42
216G5-32331	131	216G7-42001	183	216H3-92291	137	22132-40202	42A
216G5-32341	131	216G7-42011	184	216H3-92291	138	22132-40202	43
216G5-42011	131	216G7-42011	185	216H5-42141	153	22132-40202	44
216G6-32101	148	216G7-52051	143	216H7-82001	199	22132-40202	45
216G6-32101	150	216G7-52051	144	216M7-62101	170	22132-40202	45
216G6-42031	131	216G7-52121	198	216M7-62101	171	22132-40202	45
216G6-42031	132	216G7-52121	199	217G2-40301	26	22192-22091	17
216G6-42031	133	216G7-52201	145	217G2-42021	32	22192-22091	17
216G6-42031	134	216G7-52201	198	217G2-42021	33	22192-42411	42
216G6-42451	153	216G7-52201	199	217G2-42051	32	22192-42411	42A
216G6-42481	153	216G8-12101	211	217G2-42151	32	22192-42411	43
216G6-42541	115	216G8-12101	217	217G2-42301	30	22192-42411	44
216G6-42541	116	216G8-12101	225	217G2-42301	31	22192-42411	45
216G6-42541	153	216G8-12921	217	217M1-02031	6	22192-42411	45
216G6-42911	158	216G8-12921	225	217M1-02402	6	22192-42411	45
216G6-42931	158	216G8-33351	228	217W2-10001	198	22193-03001	78
216G6-43231	141	216G8-33361	214	217W2-10001	199	22193-03001	78A
216G6-43241	131	216G8-33361	220	218G1-02101	5	22197-52091	69
216G6-43241	132	216G8-33361	228	218G1-02301	1	22197-60231	84
216G6-43241	133	216G8-33361	228	218G1-02351	1	22199-12401	200

PARTS NUMBER INDEX

Part No.	Fig.No.	Part No.	Fig.No.	Part No.	Fig.No.	Part No.	Fig.No.
22199-12401	200	222A6-42451	157	224W5-32451	132	226B1-02101	1
22199-12401	65	222A6-42461	154	224W5-32451	134	22655-42591	132
22199-12401	86	222A6-42461	155	224W5-32461	132	22655-42591	133
22199-12401	87	222A6-42461	156	224W5-32461	134	22655-42591	134
22199-12401	88	222A6-42461	156	224W5-32471	132	22672-42501	46
22199-22251	209	222A6-42461	157	224W5-32471	134	22672-42501	47
22199-22251	209	222A9-32011	124	224W5-32481	132	22672-42501	48
222A2-10211	8	222A9-32011	124	224W5-32481	134	22673-02031	78
222A2-10211	9	22208-40031	215	224W5-32491	132	22673-72031	79
222A2-10211	10	22208-40031	222	224W5-32491	134	22673-72041	79
222A2-22061	146	22208-40031	230	224W5-32501	132	22673-72111	79
222A2-22061	147	22214-30321	86	224W5-32501	134	22673-72121	79
222A2-22071	146	22214-30321	87	224W5-32511	132	22673-72131	79
222A2-22071	147	22214-30321	88	224W5-32511	134	22673-72141	79
222A2-42031	25	22216-30051	149	224W5-32521	132	22673-72161	79
222A2-42031	26	22218-40191	215	224W5-32521	134	22673-72252	79
222A2-42031	27	22218-40191	222	224W5-32551	132	22673-72261	79
222A2-42031	28	22218-40191	230	224W5-32551	134	22673-72321	79
222A2-42031	29	22218-40191	231	224W5-42401	132	22673-72391	79
222A2-42331	25	22218-42111	215	224W5-42401	134	22673-72411	79
222A2-42331	25	22218-42111	222	224W5-42431	132	22673-79801	79
222A2-42331	26	22218-42111	230	224W5-42431	134	22679-12102	210
222A2-42331	26	22218-42111	231	224W7-60311	132	22679-43831	223
222A2-42331	27	22252-32241	18	224W7-60311	134	22679-43831	231
222A2-42331	27	22252-32241	19	224W7-62701	112	22679-45611	222
222A2-42331	27	22252-32241	20	22438-42641	222	22679-45651	230
222A2-42341	25	22252-32241	24	22438-42641	230	22679-45671	222
222A2-42341	25	22252-32251	131	225A7-62021	170	22679-45711	215
222A2-42341	26	22252-32251	132	225A7-62021	171	22679-45711	222
222A2-42341	26	22252-32251	133	225R2-42001	32	22679-45711	230
222A2-42341	27	22252-32251	134	225R6-32001	151	22679-45771	215
222A2-42341	27	22252-32251	11	225R9-12001	204	22679-45771	222
222A2-42361	25	22252-32251	18	225R9-12011	202	22679-45791	222
222A2-42361	26	22252-32251	19	225R9-12021	202	22679-45791	230
222A2-42361	27	22252-32251	20	225R9-12031	204	22679-45811	222
222A2-42401	25	22256-42001	13	225R9-12052	204	22679-45831	215
222A2-42401	25	22256-42001	15	225R9-12071	204	22679-45831	231
222A2-42401	25	22256-42001	42	225R9-12081	204	22679-45871	230
222A2-42401	26	22256-42001	42A	225R9-12091	204	22679-45891	215
222A2-42401	26	22256-42001	43	225R9-12101	151	22679-45891	222
222A2-42401	26	22256-42001	44	225R9-12112	204	22679-45891	222
222A2-42401	27	22256-42001	45	225R9-12142	202	22679-45891	231
222A2-42401	27	22256-42001	45	225S9-12001	202	22679-45911	215
222A2-42401	27	22256-42001	45	225S9-12011	202	22679-45911	230
222A2-42511	42	224G5-42061	131	22517-40051	183	22679-45951	222
222A2-42511	42A	224G5-42061	132	22517-40051	184	22679-45971	215
222A2-42511	43	224G5-42061	133	22517-40051	185	22679-45971	231
222A2-42511	44	224G5-42061	134	22517-40051	186	22679-45991	222
222A2-42511	45	224T8-53011	201	22517-40051	215	22679-45991	222
222A2-42511	45	224W4-30341	111	22548-34031	212	22679-45991	230
222A2-42511	45	224W4-30341	113	22548-34031	218	22679-45991	230
222A3-70203	79	224W4-52071	5	22548-34031	226	22679-46011	222
222A3-70213	79	224W5-30201	132	22548-34051	212	22679-46031	215
222A3-72011	79	224W5-30201	134	22548-34051	218	22679-46031	231
222A3-72021	79	224W5-32401	132	22548-34051	226	22679-46051	215
222A5-52111	141	224W5-32401	134	22548-34061	212	22679-46091	215
222A6-42451	154	224W5-32421	132	22548-34061	218	22679-46091	230
222A6-42451	155	224W5-32421	134	22548-34061	226	22679-46091	231
222A6-42451	156	224W5-32441	132	22580-53321	223	22679-46111	222
222A6-42451	156	224W5-32441	134	22580-53321	223	22679-46151	215

PARTS NUMBER INDEX

Part No.	Fig.No.	Part No.	Fig.No.	Part No.	Fig.No.	Part No.	Fig.No.
22679-46151	215	229F0-51371	223	229G7-82051	198	231A8-10101	225
22679-46151	231	229F0-51381	223	229G7-82051	199	231A8-10101	225
22679-46171	215	229F0-82101	222	229G7-82051	199	231A8-10171	211
22679-46171	222	229F0-82101	230	229G7-82101	198	231A8-10171	217
22679-46171	231	229F0-91001	224	229G7-82101	199	231A8-10171	225
22679-46211	230	229F0-91001	232	22959-12052	204	231A8-12001	217
22679-46231	222	229F2-22071	146	22959-12052	206	231A8-12001	225
22679-46251	215	229F2-22071	147	230C1-02041	118	231A8-12011	217
22679-46271	231	229F2-22151	143	230C1-02041	119	231A8-12011	225
22679-46311	222	229F2-22151	144	230C1-02041	120	231A8-12021	217
22679-46331	215	229F2-22161	143	230C1-02041	159	231A8-12021	225
22679-46331	230	229F2-22161	144	230C2-42201	37	231A8-12031	217
22679-46371	222	229F2-42141	117	230C2-42201	39	231A8-12031	225
22679-46391	215	229F2-42141	117	230C2-42301	33	231A8-51001	201
22679-46391	231	229F2-42141	120	230C5-55021	141	231A8-51011	201
22679-46411	230	229F2-42141	157	230C5-55031	141	231A8-51011	201
22679-46451	215	229F2-42161	63	230C5-55041	141	231A8-51011	201
22679-46511	215	229F2-42421	25	230C5-55051	141	231A8-51011	201
22679-46511	231	229F2-42421	25	230C5-55061	141	231F8-10501	211
22679-46531	222	229F2-42421	26	230C5-55071	141	231F8-10501	217
22679-46591	231	229F2-42421	26	230C5-55081	141	231F8-10501	225
22679-46651	222	229F2-42421	27	230C5-55101	141	231F8-10571	211
22679-46671	215	229F2-42421	27	230C5-55111	141	231F8-10571	217
22679-46811	215	229F2-42431	25	230C5-55121	141	231F8-10571	225
22679-47301	119	229F2-42431	26	231A0-40202	220	232A0-62001	224
22679-47301	46	229F2-42431	27	231A0-40212	220	232A0-70401	228
22679-47301	47	229F3-79811	79	231A0-40222	220	232A0-70411	228
22679-47301	48	229F6-42201	161	231A0-40232	220	232A0-70421	228
22679-47301	49	229F6-42201	161	231A0-40242	220	232A0-70431	228
22679-47301	61	229F6-42201	161	231A0-40252	220	232A0-70441	228
22679-47301	62	229F6-42201	161	231A0-40262	220	232A0-70451	228
22717-40061	183	229F6-42201	161	231A0-40272	220	232A0-70461	228
22717-40061	184	229F6-42201	161	231A0-40282	220	232A0-70471	228
22717-40061	185	229F6-42201	161	231A0-40292	220	232A0-70481	228
22717-40061	186	229F6-42201	161	231A0-40302	220	232A0-70491	228
22717-40081	215	229F6-42201	164	231A0-40312	220	232A0-70501	228
22777-60301	182	229F6-42201	164	231A0-40322	220	232A0-92141	232
228F2-42131	30	229F6-42201	164	231A0-40332	220	232A8-42201	215
228U7-62201	196	229F6-42201	164	231A0-40342	220	232A8-42201	215
228U7-62211	196	229F6-42201	165	231A0-40352	220	232A8-42201	223
228U7-62221	196	229F6-42201	28	231A0-40362	220	232A8-42201	231
228U7-62221	197	229F6-42201	29	231A0-40372	220	232A8-42201	231
22854-40201	99	229F6-42201	54	231A0-40382	220	232A8-42601	231
229F0-51201	223	229F6-42211	161	231A0-70602	228	232A8-42621	231
229F0-51211	223	229F6-42211	161	231A0-70612	228	232A8-42631	231
229F0-51221	223	229F6-42211	161	231A0-70622	228	232W9-12001	204
229F0-51231	223	229F6-42211	161	231A0-70632	228	232W9-12011	204
229F0-51241	223	229F6-42211	161	231A0-70642	228	232W9-12021	204
229F0-51251	223	229F6-42211	161	231A0-70652	228	232W9-12051	202
229F0-51261	223	229F6-42211	161	231A0-70662	228	232W9-12101	204
229F0-51271	223	229F6-42211	161	231A0-70672	228	232W9-12111	204
229F0-51281	223	229F6-42211	162	231A0-70682	228	23200-62171	232
229F0-51291	223	229F6-42211	162	231A0-70692	228	23200-72211	228
229F0-51301	223	229F6-42211	164	231A0-70702	228	23200-72221	228
229F0-51311	223	229F6-42211	164	231A0-82001	222	23232-42072	36
229F0-51321	223	229F6-42211	164	231A0-82001	230	23232-42072	37
229F0-51331	223	229F6-42211	164	231A8-10101	211	23232-42072	38
229F0-51341	223	229F6-42211	54	231A8-10101	211	23232-42072	39
229F0-51351	223	229G7-82011	198	231A8-10101	217	23235-40091	139
229F0-51361	223	229G7-82051	198	231A8-10101	217	233A1-02001	5

PARTS NUMBER INDEX

Part No.	Fig.No.	Part No.	Fig.No.	Part No.	Fig.No.	Part No.	Fig.No.
233H7-62001	190	234A0-50681	223	234A6-32001	148	234A6-82261	167
23302-42311	46	234A0-50701	223	234A6-32001	150	234A6-82271	167
23302-42311	47	234A0-50711	223	234A6-32001	150	234A6-82271	168
23302-42311	48	234A0-50721	223	234A6-32001	150	234A6-82281	167
234A0-50001	223	234A0-50731	223	234A6-32001	151	234A6-82281	168
234A0-50011	223	234A0-50741	223	234A6-42042	159	234A6-82291	167
234A0-50021	223	234A0-50751	223	234A6-42072	159	234A6-82291	168
234A0-50031	223	234A0-50761	223	234A6-43121	154	234A6-82301	167
234A0-50041	223	234A0-50771	223	234A6-43121	155	234A6-82301	168
234A0-50051	223	234A0-50781	223	234A6-43121	156	234A7-30202	174
234A0-50061	223	234A0-50791	223	234A6-43121	156	234A7-30302	175
234A0-50071	223	234A0-50801	223	234A6-81001	167	234A7-30402	176
234A0-50081	223	234A0-50811	223	234A6-82001	167	234A7-30502	177
234A0-50091	223	234A0-50821	223	234A6-82001	168	234A7-32001	174
234A0-50101	223	234A0-50831	223	234A6-82011	167	234A7-32001	175
234A0-50111	223	234A0-50841	223	234A6-82021	167	234A7-32001	176
234A0-50121	223	234A0-50851	223	234A6-82021	168	234A7-32001	177
234A0-50131	223	234A0-50861	223	234A6-82031	167	234A7-40052	186
234A0-50141	223	234A0-50871	223	234A6-82031	168	234A7-42011	186
234A0-50151	223	234A0-50881	223	234A6-82041	167	234A7-52101	145
234A0-50161	223	234A0-52501	223	234A6-82041	168	234A7-62101	188
234A0-50171	223	234A0-52501	223	234A6-82051	167	234A7-62101	189
234A0-50181	223	234A0-52511	223	234A6-82051	168	234A7-62101	190
234A0-50201	223	234A0-52511	223	234A6-82061	167	234A7-62101	191
234A0-50211	223	234A0-52611	222	234A6-82061	168	234A7-62201	188
234A0-50221	223	234A0-52611	223	234A6-82071	167	234A7-62201	189
234A0-50231	223	234A0-52611	223	234A6-82071	168	234A7-62201	190
234A0-50241	223	234A0-52611	230	234A6-82081	167	234A7-62201	191
234A0-50251	223	234A0-62051	224	234A6-82081	168	234A8-02001	220
234A0-50261	223	234A0-62111	224	234A6-82091	167	234A8-02201	216
234A0-50271	223	234A0-62111	232	234A6-82091	168	234A8-10501	211
234A0-50281	223	234A1-00101	4	234A6-82101	167	234A8-10501	217
234A0-50291	223	234A1-00111	4	234A6-82101	168	234A8-10501	225
234A0-50301	223	234A1-00121	4	234A6-82111	167	234A8-10511	211
234A0-50311	223	234A1-02001	6	234A6-82121	167	234A8-10511	217
234A0-50321	223	234A1-02071	1	234A6-82131	167	234A8-10511	225
234A0-50331	223	234A1-02071	2	234A6-82131	168	234A8-10521	211
234A0-50341	223	234A2-12201	8	234A6-82141	167	234A8-10521	217
234A0-50351	223	234A2-12201	9	234A6-82141	168	234A8-10521	225
234A0-50361	223	234A2-12201	10	234A6-82151	167	234A8-10531	211
234A0-50371	223	234A2-12211	8	234A6-82151	168	234A8-10531	217
234A0-50381	223	234A2-12211	9	234A6-82161	167	234A8-10531	225
234A0-50501	223	234A2-12211	10	234A6-82171	167	234A8-10541	211
234A0-50511	223	234A2-30501	21	234A6-82181	167	234A8-10541	217
234A0-50521	223	234A2-30501	22	234A6-82181	168	234A8-10541	225
234A0-50531	223	234A2-42151	33	234A6-82191	167	234A8-10551	211
234A0-50541	223	234A2-42301	40	234A6-82191	168	234A8-10551	217
234A0-50551	223	234A3-72001	79	234A6-82201	167	234A8-10551	225
234A0-50561	223	234A3-72021	79	234A6-82201	168	234A8-10562	211
234A0-50571	223	234A3-72031	79	234A6-82201	168	234A8-10562	217
234A0-50581	223	234A4-22101	85	234A6-82211	167	234A8-10562	225
234A0-50591	223	234A4-22101	85	234A6-82211	168	234A8-10571	211
234A0-50601	223	234A4-30001	86	234A6-82211	168	234A8-10571	217
234A0-50611	223	234A4-30001	88	234A6-82221	167	234A8-10571	225
234A0-50621	223	234A4-30111	86	234A6-82221	168	234A8-10581	211
234A0-50631	223	234A4-30111	88	234A6-82231	167	234A8-10581	217
234A0-50641	223	234A4-32261	86	234A6-82231	168	234A8-10581	225
234A0-50651	223	234A4-32261	88	234A6-82241	167	234A8-10591	211
234A0-50661	223	234A4-32271	86	234A6-82241	168	234A8-10591	217
234A0-50671	223	234A4-32271	88	234A6-82251	167	234A8-10591	225

PARTS NUMBER INDEX

Part No.	Fig.No.	Part No.	Fig.No.	Part No.	Fig.No.	Part No.	Fig.No.
234A8-10601	211	234A8-42622	216	23500-82001	215	23653-72161	79
234A8-10601	217	234A8-42622	224	23500-82001	222	23653-72171	79
234A8-10601	225	234A8-42622	232	23500-82001	230	23653-72201	79
234A8-10611	211	234A8-43501	215	23500-82001	231	23653-73011	79
234A8-10611	217	234A8-43501	222	236A5-10341	117	23653-73011	79
234A8-10611	225	234A8-43501	230	236A5-10351	117	23653-73021	79
234A8-10621	211	234A8-50103	200	236A9-19801	202	23654-32041	86
234A8-10621	217	234A8-50113	200	236A9-19801	203	23654-32041	87
234A8-10621	225	234A8-52162	200	236A9-19811	202	23654-32041	88
234A8-10631	211	234A8-52172	200	236A9-19811	202	23654-32081	86
234A8-10631	217	234B2-42201	30	236A9-19811	202	23654-32081	88
234A8-10631	225	234B7-82101	197	236A9-19811	202	23654-32161	86
234A8-10641	211	234B7-82111	197	236A9-19811	202	23654-32161	87
234A8-10641	217	234H7-60104	198	236A9-19811	204	23654-32161	88
234A8-10641	225	234H7-60301	188	236A9-19811	205	23654-34051	90
234A8-10652	211	234H7-60301	189	236A9-19811	206	23654-40501	104
234A8-10652	217	234H7-60301	190	236A9-19811	207	23654-40501	106
234A8-10652	225	234H7-60301	191	236A9-19811	208	23654-40501	108
234A8-10662	211	234H7-62171	198	23647-40041	183	23654-40501	110
234A8-10662	217	234H7-62171	199	23647-40121	133	23654-40511	106
234A8-10662	225	234H7-62291	198	23648-50161	223	23654-52021	114
234A8-10672	211	234H7-62291	199	23650-52841	223	23655-22101	153
234A8-10672	217	234H7-62301	172	23650-52841	223	23655-22101	169
234A8-10672	225	234H7-62301	173	23650-52851	223	23655-22101	169
234A8-10682	211	234H7-62351	172	23650-52851	223	23656-83001	169
234A8-10682	217	234H7-62351	173	23650-52861	223	23656-83001	169
234A8-10682	225	23452-42181	32	23650-52861	223	23656-83011	169
234A8-22202	213	23452-42181	33	23650-83521	231	23656-83011	169
234A8-22202	219	23453-02071	78	23650-83531	231	23656-83051	169
234A8-22202	227	23453-02071	78A	23650-83551	231	23656-83051	169
234A8-40701	216	23453-02091	78	23650-83561	231	23656-83061	169
234A8-40701	224	23453-02091	78A	23650-83561	231	23656-83061	169
234A8-40701	232	23453-02131	78	23650-83571	231	23657-12002	173
234A8-41001	216	23453-02131	78A	23651-02001	1	23657-42131	184
234A8-41001	224	23454-40501	92	23651-02001	2	23657-60311	188
234A8-41001	232	23454-40501	94	23651-02011	1	23657-60311	189
234A8-41101	216	23454-40501	96	23651-02011	2	23657-60311	190
234A8-41101	224	23454-40501	98	23652-12051	11	23657-60311	191
234A8-41101	232	23454-40601	94	23652-12051	18	23658-42531	215
234A8-42551	215	23455-42021	135	23652-12051	19	23658-42531	231
234A8-42551	215	23455-42021	136	23652-12051	20	23658-52101	200
234A8-42551	223	23455-42021	137	23652-44001	38	23658-52101	200
234A8-42551	231	23455-42021	138	23652-44001	39	23658-52401	200
234A8-42551	231	23456-42181	131	23652-44001	56	23658-52401	200
234A8-42561	215	23456-42181	132	23653-02001	78	23659-12054	203
234A8-42561	215	23456-42181	134	23653-02001	78A	23659-12101	202
234A8-42561	223	23456-42181	153	23653-72001	79	23659-42161	213
234A8-42561	231	23457-42041	184	23653-72001	79	23659-42161	219
234A8-42561	231	23457-42041	185	23653-72031	79	23659-42161	227
234A8-42571	215	23457-60301	84	23653-72041	79	23670-73581	228
234A8-42571	215	23457-60311	84	23653-72051	79	23670-82251	222
234A8-42571	223	23458-32052	212	23653-72062	79	23670-82251	230
234A8-42571	231	23458-32052	218	23653-72072	79	23670-82261	222
234A8-42571	231	23458-32052	226	23653-72081	79	23670-82261	230
234A8-42602	216	23467-82041	196	23653-72091	79	23678-06002	214
234A8-42602	224	23467-82041	197	23653-72101	79	23678-06002	220
234A8-42602	232	23467-82041	198	23653-72111	79	23678-06002	228
234A8-42611	216	23467-82041	199	23653-72131	79	23678-40060	216
234A8-42611	224	235C2-40301	30	23653-72141	79	23678-40070	216
234A8-42611	232	235C2-40301	31	23653-72151	79	23678-40080	232

PARTS NUMBER INDEX

Part No.	Fig.No.	Part No.	Fig.No.	Part No.	Fig.No.	Part No.	Fig.No.
23678-40085	216	23678-42401	232	239A0-40151	220	239A4-12211	83
23678-40095	216	23678-53001	201	239A0-40161	220	239A4-12211	84
23678-40095	216	23678-53101	201	239A0-40171	220	239A4-12402	80
23678-40095	232	23678-53101	201	239A0-40181	220	239A4-12411	80
23678-40105	232	23679-45051	216	239A0-60101	218	239A4-12431	80
23678-40110	216	23679-45051	232	239A0-70201	228	239A4-12441	80
23678-40110	216	23679-45051	52	239A0-70211	228	239A4-12501	28
23678-40110	232	237A1-00101	1	239A0-70221	228	239A4-12501	29
23678-40120	216	237A1-02101	3	239A0-70231	228	239A4-12511	28
23678-40120	232	237A2-10101	8	239A0-70241	228	239A4-12511	29
23678-40125	216	237A2-12001	8	239A0-70251	228	239A4-12521	28
23678-40125	216	237A2-12011	8	239A0-70261	228	239A4-12521	29
23678-40130	232	237A2-12201	12	239A0-70271	228	239A4-12541	28
23678-40135	216	237A2-22101	146	239A0-70281	228	239A4-22001	82
23678-40145	216	237A2-30101	18	239A0-70291	228	239A4-22001	83
23678-40145	216	237A2-42151	32	239A0-70301	228	239A4-50201	111
23678-40145	216	237A2-42211	36	239A0-90101	226	239A4-50201	113
23678-40145	216	237A2-42212	36	239A0-90161	232	239A5-10111	118
23678-40145	232	237A5-22101	125	239A0-92101	232	239A5-10121	118
23678-40145	232	237B1-00101	1	239A1-00101	2	239A5-10341	117
23678-40150	216	237B2-10101	8	239A1-02301	2	239A5-10351	117
23678-40150	232	237B2-42211	37	239A1-02311	2	239A5-12401	118
23678-40160	216	237B2-42212	37	239A1-02501	6	239A5-12401	119
23678-40160	216	237E2-12201	12	239A1-02511	4	239A5-12401	120
23678-40160	232	237H1-00101	1	239A2-10101	9	239A5-12411	118
23678-40165	216	237H1-00101	1	239A2-12001	9	239A5-12411	119
23678-40165	232	237H1-02001	3	239A2-12001	10	239A5-12411	120
23678-40170	216	237H1-02001	3	239A2-12011	9	239A5-12501	121
23678-40170	232	237H1-02001	3	239A2-12011	10	239A5-12521	121
23678-40175	216	237H2-10101	8	239A2-12141	9	239A5-20302	125
23678-40185	216	237H2-12201	13	239A2-12201	14	239A5-20302	126
23678-40185	232	23772-12071	8	239A2-22101	147	239A5-20402	125
23678-40190	216	23772-12071	9	239A2-30101	19	239A5-20402	126
23678-40190	216	23772-12071	10	239A2-32001	19	239A5-22101	126
23678-40190	232	23775-42101	132	239A2-32001	24	239A5-22252	125
23678-40195	232	23775-42101	133	239A2-40501	28	239A5-22252	126
23678-40200	216	23775-42101	134	239A2-42031	32	239A5-30601	153
23678-40200	216	238A2-42151	32	239A2-42031	33	239A5-40061	127
23678-40210	216	23813-00071	90	239A2-42101	32	239A5-40061	128
23678-40210	216	23813-00081	90	239A2-42101	33	239A5-40061	130
23678-40210	216	23819-20011	209	239A2-42151	33	239A5-40071	127
23678-40210	232	23819-20011	209	239A2-42201	34	239A5-40101	131
23678-40210	232	23819-20021	209	239A2-42211	38	239A5-40101	132
23678-40215	216	23819-20021	209	239A2-42212	38	239A5-40101	133
23678-40215	232	23870-52821	72	239A2-42221	41	239A5-40101	134
23678-40230	216	239A0-40001	220	239A2-42301	31	239A5-40101	140
23678-40230	232	239A0-40011	220	239A2-42311	31	239A5-40102	131
23678-40240	216	239A0-40021	220	239A2-52001	64	239A5-40102	132
23678-40245	216	239A0-40031	220	239A2-52001	68	239A5-40102	133
23678-40255	216	239A0-40041	220	239A2-52061	64	239A5-40102	134
23678-40255	232	239A0-40051	220	239A2-52061	68	239A5-40102	140A
23678-40255	232	239A0-40061	220	239A3-02001	78A	239A5-40201	127
23678-40265	216	239A0-40071	220	239A4-12102	80	239A5-40501	131
23678-40270	216	239A0-40081	220	239A4-12112	80	239A5-40631	140
23678-40275	232	239A0-40091	220	239A4-12121	80	239A5-40641	140A
23678-40280	216	239A0-40101	220	239A4-12121	81	239A5-42071	135
23678-40290	232	239A0-40111	220	239A4-12131	80	239A5-42071	136
23678-40310	216	239A0-40121	220	239A4-12201	82	239A5-42071	137
23678-40335	216	239A0-40131	220	239A4-12201	83	239A5-42071	138
23678-42401	216	239A0-40141	220	239A4-12211	82	239A5-42101	140

PARTS NUMBER INDEX

Part No.	Fig.No.	Part No.	Fig.No.	Part No.	Fig.No.	Part No.	Fig.No.
239A5-42101	140A	239A6-52131	159	239A8-30282	214	239B5-42621	138
239A5-42121	140	239A6-52141	159	239A8-30292	214	239B5-42701	135
239A5-42121	140A	239A6-52171	159	239A8-30302	214	239B5-42701	136
239A5-42161	140A	239A6-52221	159	239A8-30312	214	239B5-42701	137
239A5-42171	140	239A6-52601	159	239A8-30322	214	239B5-42701	138
239A5-42181	140	239A6-52601	159	239A8-30332	214	239B5-42721	131
239A5-42181	140A	239A7-52001	143	239A8-30342	214	239B5-42721	132
239A5-42191	140	239A7-60301	192	239A8-30352	214	239B5-42721	133
239A5-42191	140A	239A7-60301	194	239A8-30362	214	239B5-42721	134
239A5-42221	140	239A7-60311	192	239A8-30372	214	239B6-50302	159
239A5-42221	140A	239A7-60311	194	239A8-30382	214	239B6-52221	159
239A5-42251	140A	239A7-62001	189	239A8-42001	216	239B6-52601	159
239A5-42261	140	239A7-62001	191	239A8-42001	224	239C9-12001	202
239A5-42271	140	239A7-62011	189	239A9-12001	202	239C9-12011	202
239A5-42271	140A	239A7-62111	195	239A9-12011	202	239G5-40101	133
239A5-42281	140	239A7-62121	195	239A9-12071	203	239G5-40501	133
239A5-42281	140A	239A7-62131	195	239A9-12301	203	239G5-40502	133
239A5-42291	140	239A7-62211	195	239A9-92001	124	239H1-00101	2
239A5-42291	140A	239A7-62251	195	239A9-92001	124	239H1-02001	4
239A5-42301	139	239A7-62261	195	239B2-10101	10	239H1-02001	4
239A5-42311	140	239A7-62351	195	239B2-12141	9	239H1-02001	4
239A5-42311	140A	239A7-62401	195	239B2-12141	10	239H2-10101	10
239A5-42321	140	239A8-20002	212	239B2-42201	35	239H2-12201	15
239A5-42321	140A	239A8-20101	219	239B2-42211	39	239H5-40191	132
239A5-42351	135	239A8-20101	227	239B2-42212	39	239H5-40191	134
239A5-42351	136	239A8-20111	219	239B5-40021	129	239H5-40201	132
239A5-42351	137	239A8-20121	219	239B5-40031	129	239H5-40201	134
239A5-42351	138	239A8-20121	227	239B5-40201	129	239H5-40211	132
239A5-42381	131	239A8-20131	219	239B5-42201	127	239H5-40211	134
239A5-42381	132	239A8-20131	227	239B5-42201	128	239H5-40221	128
239A5-42381	133	239A8-20141	219	239B5-42201	129	239H5-40221	130
239A5-42381	134	239A8-20141	227	239B5-42201	130	239H5-40311	132
239A5-42381	30	239A8-22111	227	239B5-42211	127	239H5-40311	134
239A5-42381	31	239A8-30002	214	239B5-42211	128	239H5-40411	128
239A5-42381	60	239A8-30012	214	239B5-42211	129	239H5-40411	130
239A5-42381	62	239A8-30022	214	239B5-42211	130	239H5-42301	132
239A5-42401	131	239A8-30032	214	239B5-42221	127	239H5-42301	134
239A5-42411	131	239A8-30042	214	239B5-42221	127	239H5-42371	132
239A5-42441	135	239A8-30052	214	239B5-42221	128	239H5-42371	134
239A5-42441	136	239A8-30062	214	239B5-42221	128	239H5-42381	136
239A5-42441	137	239A8-30072	214	239B5-42221	129	239H5-42381	137
239A5-42441	138	239A8-30082	214	239B5-42221	129	239H5-42451	132
239A5-42451	135	239A8-30092	214	239B5-42221	130	239H5-42451	134
239A5-42461	135	239A8-30102	214	239B5-42221	130	239H5-42461	132
239A5-42471	135	239A8-30112	214	239B5-42231	127	239H5-42461	134
239A5-42491	135	239A8-30122	214	239B5-42231	128	239H7-52001	143
239A5-42491	138	239A8-30132	214	239B5-42231	129	239H7-52001	143
239A5-50101	141	239A8-30142	214	239B5-42231	130	239H7-52001	144
239A6-40201	152	239A8-30152	214	239B5-42421	135	239H7-60101	199
239A6-40301	154	239A8-30162	214	239B5-42421	136	239H7-60201	172
239A6-40501	153	239A8-30172	214	239B5-42421	137	239H7-60201	173
239A6-40502	153	239A8-30182	214	239B5-42421	138	239H7-60401	192
239A6-42001	152	239A8-30202	214	239B5-42501	133	239H7-60401	192
239A6-42291	154	239A8-30212	214	239B5-42601	135	239H7-60401	194
239A6-43001	152	239A8-30222	214	239B5-42601	136	239H7-62001	191
239A6-43011	152	239A8-30232	214	239B5-42601	137	239H7-62101	199
239A6-43101	152	239A8-30242	214	239B5-42601	138	239H7-82001	198
239A6-43111	152	239A8-30252	214	239B5-42621	135	239H7-82001	199
239A6-50112	159	239A8-30262	214	239B5-42621	136	23917-42191	223
239A6-50302	159	239A8-30272	214	239B5-42621	137	23917-42191	231

PARTS NUMBER INDEX

Part No.	Fig.No.	Part No.	Fig.No.	Part No.	Fig.No.	Part No.	Fig.No.
24232-22001	17	24868-42111	215	25953-72001	79	273A9-12242	202
24234-30551	85	24868-42111	215	25954-52061	111	27397-52101	71
24234-30551	85	24868-42111	223	25954-52061	113	27410-53111	223
24234-30551	86	24868-42111	231	25954-52071	111	27410-53111	223
24234-30551	88	24868-42111	231	25954-52071	113	27410-53201	222
24234-30561	111	25592-42081	32	25954-52081	111	27410-53201	230
24234-30561	113	25592-42081	33	25954-52081	113	27415-52151	141
24234-30561	86	25592-42121	146	25954-52091	111	27419-12051	202
24234-30561	88	25592-42121	147	25954-52091	113	27419-12061	204
24234-32411	86	25594-52141	82	25957-62201	189	27419-12061	205
24234-32411	88	25594-52141	83	25957-62201	197	27419-12061	206
24234-32421	86	25594-52362	111	25957-62201	198	27419-12061	207
24234-32421	88	25594-52362	113	25957-62201	199	27419-12061	208
24320-52001	223	25594-52431	114	25958-52201	112	27419-12062	203
24329-46201	216	25595-42311	131	25958-52211	112	27419-12062	204
24329-46201	232	25595-42311	140	25958-52221	112	27419-12071	204
24352-42521	30	25595-42311	140A	26062-42881	30	27419-12071	205
24352-42521	31	25595-42381	140A	26062-42881	31	27419-12071	206
24353-72001	78	25595-42391	140A	26062-42881	46	27419-12071	207
24353-72001	78A	25595-42411	140	26062-42881	47	27419-12071	208
24354-32311	90	25595-42411	140A	26062-42881	48	27419-12072	203
24389-46021	222	25595-42421	140	26062-42881	49	27419-12072	204
24389-46021	230	25595-42421	140A	26062-42881	60	27419-12101	202
24452-52002	78	25595-42452	131	26062-42881	61	27455-22011	125
24452-52002	78A	25595-42452	131	26062-42881	62	27539-12011	202
24453-02061	78	25595-42491	131	26094-17001	84	27539-12021	202
24453-02061	78A	25595-42491	132	26094-17021	84	27652-62211	40
24453-02102	78	25595-42491	133	26094-17081	84	27662-62711	153
24453-02102	78A	25595-42491	134	26094-17091	84	27662-62721	118
24453-02121	78	25596-42361	42	26094-17101	84	27662-62721	120
24453-02121	78A	25596-42361	42A	26094-17111	84	27662-63041	153
24454-30512	86	25596-42361	42A	26094-17121	84	277H7-60501	195
24454-30512	88	25596-42361	43	26094-17141	84	277H7-60601	182
24454-32161	86	25596-42361	44	26094-17151	84	277P0-50101	222
24454-32161	88	25596-42361	45	26314-17001	84	277P0-50111	222
24454-32232	86	25596-42361	45	26314-17021	84	277P0-50121	222
24454-32232	87	25596-42361	45	27042-42312	125	277P0-50131	222
24454-32232	88	25596-42361	45	27042-42312	126	277P0-50141	222
24454-32391	86	25597-62211	82	27042-42312	192	277P0-50151	222
24454-32391	88	25597-62211	83	27042-42312	193	277P0-50161	222
24454-39812	86	25599-22001	209	27042-42312	194	277P0-50171	222
24454-39812	88	25599-22001	209	27042-43501	51	277P0-50181	222
24459-42951	216	256A1-08031	4	27042-64311	59	277P0-50191	222
24459-42951	224	256A2-42171	32	27049-12172	202	277P0-50201	222
24459-42951	232	256A2-42171	33	271A7-52301	143	277P0-50211	222
24469-42701	112	256C1-08011	3	271A7-52301	144	277P0-50221	222
24846-80302	169	256C5-12671	152	271A9-12191	210	277P0-50231	222
24846-80302	169	256C5-12671	159	271A9-12251	203	277P0-50241	222
24846-82001	169	256C7-42281	132	271F4-12221	80	277P0-50251	222
24846-82001	169	256C7-42281	134	271F4-12221	81	277P0-50261	222
24846-82011	169	256G1-08011	4	271F4-12231	80	277P0-50271	222
24846-82011	169	256G1-08021	4	271F4-12231	81	277P0-50281	222
24846-82021	169	256J6-42291	51	271F4-12241	80	277P0-50301	222
24846-82021	169	25782-52041	2	271F4-12241	81	277P0-50311	222
24846-82031	169	25784-52342	112	272A8-52101	87	277P0-50321	222
24846-82031	169	25785-43091	131	272E7-52022	146	277P0-50331	222
24846-82041	169	25787-82081	196	272E7-52022	147	277P0-50341	222
24846-82041	169	25787-82081	197	272K8-52201	214	277P0-50351	222
24846-82051	169	25789-12051	203	272K8-52201	220	277P0-50361	222
24846-82051	169	25816-42761	157	272K8-52201	228	277P0-50371	222

PARTS NUMBER INDEX

Part No.	Fig.No.	Part No.	Fig.No.	Part No.	Fig.No.	Part No.	Fig.No.
277P0-50381	222	277P0-80091	230	277P0-81732	231	277P8-22081	214
277P0-50391	222	277P0-80101	230	277P0-81742	231	277P8-22081	218
277P0-50411	222	277P0-80301	230	277P0-81752	231	277P8-22081	220
277P0-50421	222	277P0-80311	230	277P0-81762	231	277P8-22081	220
277P0-50431	222	277P0-80321	230	277P0-81772	231	277P8-22081	220
277P0-50441	222	277P0-80331	230	277P0-81782	231	277P8-22081	226
277P0-50451	222	277P0-80341	230	277P0-81792	231	277P8-22081	228
277P0-50461	222	277P0-80351	230	277P0-81802	231	277P8-22081	228
277P0-50471	222	277P0-80371	230	277P0-81902	231	277P8-22081	228
277P0-50481	222	277P0-80381	230	277P0-81912	231	277P8-32701	142
277P0-50501	222	277P0-80391	230	277P0-81922	231	277P8-40001	215
277P0-50511	222	277P0-80401	230	277P0-81932	231	277P8-40011	215
277P0-50521	222	277P0-80501	230	277P0-81942	231	277P8-40021	215
277P0-50531	222	277P0-80511	230	277P0-81952	231	277P8-40031	215
277P0-50541	222	277P0-80521	230	277P0-81962	231	277P8-40041	215
277P0-50551	222	277P0-80531	230	277P0-81972	231	277P8-40051	215
277P0-50561	222	277P0-80541	230	277P0-81982	231	277P8-40061	215
277P0-50571	222	277P0-80551	230	277P0-81992	231	277P8-40071	215
277P0-50581	222	277P0-80561	222	277P0-82002	231	277P8-40081	215
277P0-50591	222	277P0-80561	230	277P0-82061	222	277P8-40091	215
277P0-50601	222	277P0-80571	230	277P0-82061	230	277P8-40101	215
277P0-50601	230	277P0-80581	230	277P0-82071	222	277P8-40111	215
277P0-50611	222	277P0-80591	230	277P0-82071	230	277P8-40121	215
277P0-50621	222	277P0-80601	230	277P0-82501	222	277P8-40131	215
277P0-50631	222	277P0-81101	231	277P0-82501	230	277P8-40141	215
277P0-50641	222	277P0-81111	231	277P0-83001	231	277P8-40151	215
277P0-50651	222	277P0-81121	231	277P0-89811	231	277P8-40161	215
277P0-50661	222	277P0-81131	231	277P0-92061	232	277P8-40171	215
277P0-50671	222	277P0-81141	231	277P8-22051	212	277P8-40181	215
277P0-50681	222	277P0-81151	231	277P8-22051	212	277T0-62071	224
277P0-59801	222	277P0-81161	231	277P8-22051	214	277T0-62071	232
277P0-59801	230	277P0-81171	231	277P8-22051	214	277T0-90151	232
277P0-60301	224	277P0-81181	231	277P8-22051	218	277T0-92131	232
277P0-60311	224	277P0-81191	231	277P8-22051	220	27717-52081	198
277P0-60321	224	277P0-81201	231	277P8-22051	220	27717-52081	199
277P0-60331	224	277P0-81302	231	277P8-22051	226	27732-42221	122
277P0-60341	224	277P0-81312	231	277P8-22051	228	27732-42311	40
277P0-60351	224	277P0-81322	231	277P8-22051	228	27732-42311	42
277P0-60361	224	277P0-81332	231	277P8-22051	228	27732-42311	45
277P0-60371	224	277P0-81342	231	277P8-22061	212	27732-42311	46
277P0-60381	224	277P0-81352	231	277P8-22061	212	27732-42311	46
277P0-60391	224	277P0-81362	231	277P8-22061	214	27732-42311	47
277P0-60401	224	277P0-81372	231	277P8-22061	218	27732-42311	48
277P0-60411	224	277P0-81382	231	277P8-22061	220	27732-42311	49
277P0-60421	224	277P0-81392	231	277P8-22061	226	27732-42311	50
277P0-60431	224	277P0-81402	231	277P8-22061	228	27732-42311	54
277P0-60441	224	277P0-81502	231	277P8-22061	228	27732-42311	58
277P0-60451	224	277P0-81512	231	277P8-22071	212	27732-42311	61
277P0-60461	224	277P0-81522	231	277P8-22071	214	27732-42311	62
277P0-60471	224	277P0-81532	231	277P8-22071	214	27912-62441	141
277P0-60481	224	277P0-81542	231	277P8-22071	218	27970-53141	231
277P0-80001	230	277P0-81552	231	277P8-22071	220	27979-43101	216
277P0-80011	230	277P0-81562	231	277P8-22071	220	27979-43101	224
277P0-80021	230	277P0-81572	231	277P8-22071	220	27979-43101	232
277P0-80031	230	277P0-81582	231	277P8-22071	226	280C2-42301	29
277P0-80041	230	277P0-81592	231	277P8-22071	228	280C2-42301	29
277P0-80051	230	277P0-81602	231	277P8-22071	228	280C2-42311	29
277P0-80061	230	277P0-81702	231	277P8-22071	228	280C2-42311	29
277P0-80071	230	277P0-81712	231	277P8-22081	212	280C2-42331	28
277P0-80081	230	277P0-81722	231	277P8-22081	214	280C2-42331	29

PARTS NUMBER INDEX

Part No.	Fig.No.	Part No.	Fig.No.	Part No.	Fig.No.	Part No.	Fig.No.
280C2-42341	29	51233-83021	206	514A3-72211	86	514T7-22061	51
280C2-42351	28	51233-83221	206	514A3-72211	87	516G0-60101	3
280C2-42351	29	51233-83221	208	514A3-72211	87	516G0-62001	4
281E7-42101	187	51233-83421	206	514A3-72211	88	516G0-62011	3
29690-83011	231	51233-83621	206	514A3-82002	204	516G1-32002	40
29690-83021	231	51233-83821	206	514A3-82002	205	516G1-32012	40
29690-83021	231	514A0-82022	21	514A3-82002	206	516G1-42021	163
3956323	55	514A0-82081	21	514A3-82002	207	516G1-42021	164
509K2-30101	29	514A0-82251	21	514A3-82002	208	516G1-42021	164
509K2-30101	29	514A0-82251	22	514A3-82012	204	516G1-42021	165
509M5-92381	23	514A1-41001	49	514A3-82012	206	516G1-42021	20
509P5-90101	20	514A1-41001	61	514A3-82022	204	516G1-42101	46
509P5-92001	20	514A1-41001	62	514A3-82022	206	516G1-42101	48
509P5-92011	20	514A1-41011	49	514A3-82032	206	516G1-42101	54
509P5-92021	20	514A1-41021	49	514A3-82042	206	516G1-42111	46
509P5-92031	20	514A1-41031	49	514A3-82042	208	516G1-42111	47
509P5-92041	20	514A1-42041	49	514A3-82052	206	516G1-42111	47
509P5-92051	20	514A1-42041	51	514A3-82062	206	516G1-42111	48
509P5-92061	20	514A1-42041	54	514A3-82072	206	516G1-42121	48
509P5-92071	20	514A1-42191	49	514A3-82301	202	516G1-42151	46
509P5-92081	20	514A1-42191	61	514A3-82301	226	516G1-42151	47
509P5-92091	20	514A1-42191	62	514A3-82321	202	516G1-42151	48
509P5-92101	20	514A2-40104	87	514A3-82321	226	516G1-42211	49
509P5-92111	20	514A2-40462	112	514A3-82331	202	516G1-42211	54
509P5-92121	20	514A2-42481	87	514A3-82331	226	516G1-42251	161
509P5-92181	20	514A2-42512	193	514A3-82341	202	516G1-42251	161
509P5-92201	20	514A2-42601	84	514A3-82341	226	516G1-42251	161
509P5-92211	20	514A2-42611	84	514A3-82351	202	516G1-42251	161
509P5-92231	20	514A2-42621	84	514A3-82351	226	516G1-42251	161
509P5-92241	20	514A2-42721	87	514A3-82361	202	516G1-42251	161
509P5-92351	24	514A2-44022	87	514A3-82361	226	516G1-42251	161
509P5-92451	23	514A2-44022	87	514A3-82371	202	516G1-42251	162
509P5-92471	23	514A2-44022	87	514A3-82371	226	516G2-40451	84
509P5-92481	23	514A2-44071	87	514A3-82381	202	516G2-42401	84
509P5-92491	20	514A2-44071	87	514A3-82381	226	516G2-42411	84
509P5-92511	20	514A2-44071	87	514A3-82391	202	516G2-72051	148
509P5-92521	20	514A2-49803	112	514A3-82391	226	516G2-72071	21
509P9-90101	42	514A2-72411	187	514A3-82601	92	516G2-72071	22
509P9-90101	45	514A2-72411	187	514A3-82601	94	516G2-72701	204
509P9-90101	45	514A2-72411	187	514A3-82601	96	516G2-72701	205
509P9-90101	45	514A2-82012	204	514A3-82601	98	516G2-72701	206
510F0-82032	21	514A2-92011	202	514A5-12011	117	516G2-72701	207
510F0-82032	22	514A3-02002	206	514A5-12011	117	516G2-72701	208
51152-82012	204	514A3-71701	212	514A5-12011	118	516G2-72711	204
51152-82012	206	514A3-71702	218	514A5-12011	118	516G2-72711	205
51152-82022	204	514A3-71702	226	514A5-12011	119	516G2-72711	206
51152-82022	206	514A3-72052	86	514A5-12011	120	516G2-72711	207
51153-02001	206	514A3-72052	87	514A5-12011	158	516G2-72711	208
51232-82001	204	514A3-72052	87	514A5-12021	124	516G2-82051	204
51232-82001	205	514A3-72052	87	514A5-12701	152	516G2-82061	204
51232-82001	206	514A3-72052	88	514A5-12701	81	516G3-82001	206
51232-82001	207	514A3-72062	86	514A5-32341	54	516G3-82011	204
51232-82001	208	514A3-72062	87	514A5-32341	54	516G3-82011	206
51232-82011	204	514A3-72062	87	514A7-42002	78	516G3-82021	206
51232-82011	206	514A3-72062	87	514A7-42002	78A	516G3-82031	206
51232-82021	204	514A3-72062	88	514E2-92001	202	516G3-82031	208
51232-82021	206	514A3-72091	41	514T2-72061	119	516G3-82041	206
51232-82032	204	514A3-72101	90	514T6-42001	169	516G3-82051	206
51233-02011	206	514A3-72201	86	514T6-42001	169	516G3-82061	208
51233-02021	206	514A3-72201	88	514T7-20201	51	516G3-82071	208

PARTS NUMBER INDEX

Part No.	Fig.No.	Part No.	Fig.No.	Part No.	Fig.No.	Part No.	Fig.No.
516G3-82101	206	516G6-22051	25	522A2-18051	132	522A2-60563	79
516G3-82111	204	516G6-22051	25	522A2-18051	134	522A2-60572	79
516G3-82111	206	516G6-22051	26	522A2-18071	132	522A2-60582	79
516G3-82121	204	516G6-22051	26	522A2-18071	134	522A2-61561	79
516G3-82121	206	516G6-22051	27	522A2-18081	132	522A2-61561	79
516G3-82131	206	516G6-22051	27	522A2-18081	134	522A2-72111	204
516G3-82141	206	516G6-90401	163	522A2-18091	132	522A2-72111	205
516G3-82141	208	516G6-92001	57	522A2-18091	134	522A2-72111	206
516G3-82151	206	516G6-92011	57	522A2-18101	132	522A2-72111	207
516G3-82161	206	516G6-92022	57	522A2-18101	134	522A2-72111	208
516G3-82171	206	516G6-92031	57	522A2-18111	132	522A2-82061	202
516G3-82181	208	516G6-92151	57	522A2-18111	134	522A2-82111	202
516G3-82191	208	516G6-92201	57	522A2-18121	132	522A2-82151	204
516G3-82201	206	516G6-92211	57	522A2-18121	134	522A3-80401	108
516G3-82211	204	516G7-22001	52	522A2-18131	132	522A3-80401	108
516G3-82211	206	516G7-50201	164	522A2-18131	134	522A3-80401	96
516G3-82221	204	516G7-50201	164	522A2-18161	132	522A3-80401	96
516G3-82221	206	516G7-50211	165	522A2-18161	134	522A3-82441	202
516G3-82232	206	516G7-50301	58	522A2-18171	132	522A3-82641	202
516G3-82241	206	516G7-50401	163	522A2-18171	134	522A3-82841	202
516G3-82241	208	516G8-92001	49	522A2-18201	132	522A3-83021	206
516G3-82251	206	516G9-10101	50	522A2-18201	134	522A3-83041	202
516G3-82261	206	516G9-12011	50	522A2-18211	132	522A3-83061	206
516G3-82271	206	516G9-92101	42	522A2-18211	134	522A3-83061	208
516G3-82281	208	516G9-92101	45	522A2-18221	132	522A3-83081	206
516G3-82291	208	516G9-92101	45	522A2-18221	134	522A3-83221	206
516G3-82521	32	516G9-92101	45	522A2-18281	132	522A3-83221	208
516G3-82801	204	516H8-80101	25	522A2-18281	134	522A3-83241	202
516G3-82801	205	516M5-12311	124	522A2-18301	132	522A3-83281	206
516G3-82801	206	516M5-12311	124	522A2-18301	134	522A3-83281	208
516G3-82801	207	517G6-20101	26	522A2-18311	132	522A3-83421	206
516G3-82801	208	517G6-20201	26	522A2-18311	134	522A3-83441	202
516G3-82811	206	517H8-80101	26	522A2-18321	132	522A3-83461	206
516G3-82821	204	518G0-52001	1	522A2-18321	134	522A3-83481	206
516G3-82821	206	518G2-72121	32	522A2-18331	132	522A3-83621	206
516G3-82831	204	518G2-80231	116	522A2-18331	134	522A3-83641	202
516G3-82831	206	518G8-12001	16	522A2-18341	132	522A3-83661	206
516G3-82841	206	518G8-12051	16	522A2-18341	134	522A3-83681	206
516G3-82851	206	518G8-12101	16	522A2-18351	132	522A3-83821	206
516G3-82851	208	521A2-42001	32	522A2-18351	134	522A3-83841	202
516G3-82861	206	521A2-42061	56	522A2-18361	132	522A3-83861	206
516G3-82871	206	522A1-10201	4	522A2-18361	134	522A3-83881	206
516G3-82881	206	522A1-42051	46	522A2-18371	132	522A6-80201	96
516G3-82891	208	522A1-42051	47	522A2-18371	134	522A6-80211	96
516G3-82901	208	522A1-42051	48	522A2-18391	132	522A6-80221	96
516G5-12511	124	522A1-42061	46	522A2-18391	134	522A6-80301	101
516G5-13051	117	522A1-42061	47	522A2-18541	132	522A6-80311	101
516G5-13151	117	522A1-42061	48	522A2-18541	134	522A6-80321	101
516G5-13511	124	522A2-10401	132	522A2-18551	132	522A6-80401	103
516G5-13511	124	522A2-10401	134	522A2-18551	134	522A6-80411	103
516G6-12051	55	522A2-11601	132	522A2-18561	132	522A6-80421	103
516G6-20101	25	522A2-11601	134	522A2-18561	134	522A6-80431	103
516G6-20201	25	522A2-18011	132	522A2-18571	132	522A6-80441	103
516G6-22011	63	522A2-18011	134	522A2-18571	134	522A6-80451	103
516G6-22031	25	522A2-18021	132	522A2-18581	132	522A6-80501	108
516G6-22031	25	522A2-18021	134	522A2-18581	134	522A6-80511	108
516G6-22031	26	522A2-18031	132	522A2-18591	132	522A6-80521	108
516G6-22031	26	522A2-18031	134	522A2-18591	134	522A7-12211	32
516G6-22031	27	522A2-18041	132	522A2-42001	33	522A7-22011	52
516G6-22031	27	522A2-18041	134	522A2-60553	79	522A7-22011	53

PARTS NUMBER INDEX

Part No.	Fig.No.	Part No.	Fig.No.	Part No.	Fig.No.	Part No.	Fig.No.
522B0-92021	7	529F7-22001	53	534A2-74101	227	534A4-60502	177
522B0-92031	7	529F7-52241	60	534A2-74201	219	534A5-00401	124
522B0-92041	7	529F7-52241	62	534A2-74201	227	534A5-00411	124
522B0-92051	7	530C1-42001	46	534A2-74301	219	534A5-12321	123
522E2-82061	202	530C3-82361	33	534A2-74301	227	534A5-12331	123
522E2-82111	202	53030-52471	53	534A3-04001	222	534A5-12571	124
524G2-10502	65	531A0-52521	43	534A3-04001	230	534A5-32311	167
524G3-62121	69	531B2-70251	27	534A3-70021	86	534A5-32651	157
524T3-84031	226	531B2-70261	27	534A3-70021	88	534A5-33001	54
524W2-42651	84	531B2-70271	27	534A3-70031	86	534A6-80171	98
524W3-92211	21	531B2-70281	27	534A3-70031	88	534A6-80271	110
524W5-12091	118	531B2-72041	1	534A3-70101	86	534A6-85001	110
524W5-12091	119	531B2-72051	1	534A3-70101	88	534A6-85011	98
524W5-12091	120	531B2-72061	1	534A3-72111	86	534A7-02001	33
524W5-13351	123	531B2-72071	1	534A3-72111	88	534A7-22101	51
52672-72122	204	531B2-72091	1	534A3-72121	86	534A7-22201	52
52672-72122	205	53130-12091	53	534A3-72121	88	534A7-22201	53
52672-72122	206	532B3-82201	12	534A3-82311	204	534A7-22211	52
52672-72122	207	532B3-82201	14	534A3-82311	205	534A7-22211	53
52672-72122	208	532N6-52011	13	534A3-82311	206	534A7-50101	58
52672-72231	215	532N6-52011	15	534A3-82311	207	534A7-50301	59
52672-72231	222	533A0-52051	42	534A3-82311	208	534A7-50401	59
52672-72231	230	533A0-52051	45	534A3-82321	206	534A7-50501	59
52672-72231	231	533A2-40201	112	534A3-82331	204	534A7-50601	60
52672-82062	204	533A2-40211	112	534A3-82331	206	534A7-50601	61
52672-82073	204	533A2-40402	87	534A3-82341	204	534A7-50601	62
52676-80202	100	533A2-40502	87	534A3-82341	206	534A7-52011	78
52676-80302	100	533A2-40552	87	534A3-82351	206	534A7-52011	78A
52676-80402	100	533A2-40552	87	534A3-82361	206	534A7-52301	59
52676-80601	96	533A2-42001	112	534A3-82361	208	534A7-52401	59
52676-80601	96	533A2-42021	112	534A3-82371	206	534A7-52501	59
52676-80802	101	533A2-42032	87	534A3-82381	206	534A7-72001	30
52691-92211	149	533A2-42042	87	534A3-82391	206	534A7-72001	31
52691-92221	149	533A2-42071	87	534A3-82401	208	534A9-22001	122
528F3-82021	208	533A2-42101	87	534A3-82411	208	534A9-22011	122
528F3-82031	208	533A2-42202	87	534A3-82421	204	534A9-22101	122
529F0-82101	21	533A2-42202	87	534A3-82421	205	534A9-22211	41
529F1-42201	49	533A2-42212	87	534A3-82421	206	534A9-22301	122
529F1-42251	49	533A2-42212	87	534A3-82421	207	534A9-92131	42
529F1-42251	61	533B4-70011	1	534A3-82421	208	534A9-92131	43
529F1-42251	62	534A0-60011	4	534A3-82431	206	534A9-92131	45
529F2-42611	84	534A0-62001	4	534A3-82441	204	534B3-80281	73
529F3-70401	183	534A0-62011	4	534A3-82441	206	534B8-30201	75
529F3-70411	184	534A0-82101	21	534A3-82451	204	534B8-32011	75
529F3-70411	185	534A1-64402	219	534A3-82451	206	534B8-32021	75
529F3-70421	186	534A1-64402	227	534A3-82461	206	534B8-32031	75
529F3-82041	208	534A1-64412	219	534A3-82471	206	534B8-32041	75
529F3-82051	208	534A1-64412	227	534A3-82471	208	534B8-32051	75
529F3-82061	208	534A2-40402	174	534A3-82481	206	534F3-82001	104
529F3-82071	208	534A2-40502	175	534A3-82491	206	534F3-82001	106
529F3-82081	202	534A2-40502	175	534A3-82501	206	534F3-82001	108
529F3-82091	202	534A2-40502	176	534A3-82511	208	534F3-82001	110
529F3-82101	202	534A2-40502	176	534A3-82521	208	534G3-80101	70
529F3-82101	226	534A2-40502	177	534A3-82531	204	534G3-80102	70
529F3-82111	202	534A2-40502	177	534A4-22001	122	534G8-30101	70
529F3-82111	226	534A2-74001	219	534A4-22011	122	534G8-30102	70
529F3-82161	208	534A2-74001	227	534A4-22101	122	53456-80502	94
529F3-82171	208	534A2-74051	219	534A4-60202	174	53456-80702	94
529F3-82242	208	534A2-74051	227	534A4-60302	175	53456-80902	92
529F3-82252	208	534A2-74101	219	534A4-60402	176	53456-80902	94

PARTS NUMBER INDEX

Part No.	Fig.No.	Part No.	Fig.No.	Part No.	Fig.No.	Part No.	Fig.No.
53456-82052	101	53656-82041	103	53666-82021	107	538S3-72001	144
53456-82062	101	53656-82041	103	53666-82021	109	539A0-80101	19
53457-40003	100	53656-82041	93	53666-82031	105	539A0-80401	19
53457-42151	100	53656-82041	95	53666-82031	107	539A0-80501	19
535C2-60401	153	53656-82041	97	53666-82031	109	539A0-90111	118
535C8-92051	49	53656-82041	99	53666-82041	105	539A1-32001	123
535E3-82241	206	53656-82051	102	53666-82041	107	539A1-42201	46
535E3-82241	208	53656-82051	102	53666-82041	109	539A1-42201	47
535H3-82261	141	53656-82051	103	53675-54101	216	539A1-42201	48
535H3-82411	206	53656-82051	103	53675-54101	232	539A1-64101	218
535H3-82411	208	53656-82051	93	53675-55051	188	539A1-64111	218
535H3-82421	206	53656-82051	95	53675-55051	189	539A1-64201	226
535H3-82431	206	53656-82051	97	53675-55051	190	539A1-64211	226
535H3-82441	206	53656-82051	99	53675-55051	191	539A1-70001	19
535H3-82451	206	53656-82061	102	53675-55051	216	539A1-70011	19
535H3-82461	206	53656-82061	102	53675-55051	232	539A1-72101	19
535H3-82461	208	53656-82061	103	537A0-52001	146	539A2-32001	64
535H3-82471	206	53656-82061	103	537A0-52501	156	539A2-32001	68
535H3-82481	206	53656-82061	93	537A0-52501	156	539A2-32041	64
535H3-82491	206	53656-82061	95	537A0-52511	156	539A2-32041	68
535H3-82501	208	53656-82061	97	537A0-52511	156	539A2-42001	84
535H3-82511	208	53656-82061	99	537A0-52521	156	539A2-42011	84
536G1-70201	18	53657-42053	100	537A0-52521	156	539A2-60111	119
536G2-82021	204	53657-42081	78	537A0-52531	156	539A2-60221	119
536G3-82201	32	53657-42081	78A	537A0-52531	156	539A2-60231	116
536K6-02271	28	53657-42091	78	537A0-80101	18	539A2-60301	81
536K6-02271	29	53657-42091	78A	537A0-80301	21	539A2-60601	152
53651-12551	3	53658-42011	222	537A0-80301	22	539A2-62301	81
53651-12551	4	53658-42011	230	537A0-80401	18	539A2-62321	81
53652-82011	204	53658-43001	223	537A0-82001	21	539A2-72121	33
53652-82011	206	53658-43001	231	537A0-82001	22	539A2-80111	119
53652-82352	204	53658-43011	223	537A0-82011	21	539A2-80221	119
53652-82352	206	53658-43011	231	537A0-82011	22	539A2-82071	204
53652-82401	204	53658-43021	223	537A1-70001	18	539A2-82181	204
53652-82401	206	53658-43021	231	537A1-70101	1	539A2-82181	205
53652-82541	204	53658-43031	223	537A1-70111	1	539A2-82181	206
53652-82551	204	53658-43031	231	537A1-72101	18	539A2-82181	207
53656-80201	102	53658-43041	223	537A2-72011	36	539A2-82181	208
53656-80211	102	53658-43041	231	537A2-72021	36	539A2-82251	119
53656-80401	103	53666-80201	95	537A3-72021	36	539A2-82281	204
53656-80411	103	53666-80401	97	537A4-70101	1	539A2-90201	115
53656-80501	102	53666-80501	95	537A6-52001	12	539A2-90301	116
53656-80511	102	53666-80601	93	537A6-60301	8	539A2-90401	116
53656-80601	102	53666-80601	95	537A7-60101	1	539A3-72021	38
53656-80611	102	53666-80701	95	537B1-70101	1	539A3-72151	34
53656-80701	102	53666-80901	107	537B1-70111	1	539A3-91201	220
53656-80711	102	53666-81301	109	537B2-72011	37	539A3-91211	220
53656-80901	102	53666-81401	107	537B2-72021	37	539A3-91221	220
53656-80901	103	53666-81501	105	537B3-72021	37	539A3-91231	220
53656-80911	102	53666-81501	107	537B3-80001	70	539A3-91241	220
53656-80911	103	53666-81601	107	537B3-80002	70	539A3-91251	220
53656-81301	108	53666-81801	93	537B4-50001	70	539A3-91261	220
53656-81301	108	53666-81801	95	537B4-50002	70	539A3-91271	220
53656-81401	106	53666-81801	95	537B4-70101	1	539A3-91281	220
53656-81501	104	53666-81801	97	537B7-60101	1	539A3-91291	220
53656-81501	106	53666-81901	105	537E6-52001	12	539A3-91301	220
53656-81601	106	53666-81901	107	537H4-70101	1	539A3-91311	220
53656-82001	101	53666-81901	107	537H6-52001	13	539A3-91321	220
53656-82041	102	53666-81901	109	537H7-60101	1	539A3-91331	220
53656-82041	102	53666-82021	105	538B6-60301	10	539A3-91341	220

PARTS NUMBER INDEX

Part No.	Fig.No.	Part No.	Fig.No.	Part No.	Fig.No.	Part No.	Fig.No.
539A3-91351	220	539A6-60301	9	539B3-82201	33	558A9-92001	43
539A3-91361	220	539A6-60301	10	539B3-82301	35	558A9-92001	45
539A3-91371	220	539A7-22011	51	539B4-50001	70	558A9-92001	45
539A3-91381	220	539A7-22061	51	539B4-50002	70	558A9-92001	45
539A3-91401	228	539A7-22211	51	539B6-92111	57	558A9-92001	60
539A3-91411	228	539A7-22511	51	539B6-92211	57	558A9-92001	62
539A3-91421	228	539A7-42001	91	539B7-52031	60	55812-42011	54
539A3-91431	228	539A7-42011	91	539B7-52031	61	55952-18021	132
539A3-91441	228	539A7-42021	91	539B7-52031	62	55952-18021	134
539A3-91451	228	539A7-42031	91	539C0-90051	119	55953-02032	206
539A3-91461	228	539A7-42061	91	539C0-90061	119	56110-63521	52
539A3-91471	228	539A7-42071	91	539C1-90101	120	56110-63521	53
539A3-91481	228	539A7-52001	60	539C1-90151	44	57042-72091	40
539A3-91491	228	539A7-52001	61	539C1-90211	120	57045-52141	90
539A3-91501	228	539A7-52001	62	539C1-90401	153	57045-52151	90
539A5-00111	118	539A7-52041	59	539C1-90401	153	571A3-82361	204
539A5-00121	118	539A7-52101	61	539C1-90402	153	571A3-82361	205
539A5-00131	118	539A7-52101	62	539C1-90402	153	571A3-82361	206
539A5-00141	118	539A7-52311	59	539C1-90501	21	571A3-82361	207
539A5-00151	117	539A7-52411	59	539C1-90521	21	571A3-82361	208
539A5-00151	117	539A7-52511	59	539C1-92301	155	571A6-82081	108
539A5-00161	117	539A7-60101	2	539C1-92311	155	577H3-72181	166
539A5-00161	117	539A7-60301	14	539C1-92401	155	577P3-74001	212
539A5-00171	117	539A7-62201	157	539C1-92501	21	577P3-74001	212
539A5-00181	117	539A7-72001	28	539C1-92541	155	577P3-74001	214
539A5-00261	124	539A7-72001	29	539C1-92551	155	577P3-74001	214
539A5-00401	115	539A8-22101	54	539G3-72001	143	577P3-74001	218
539A5-00501	115	539A8-22151	54	539H6-52001	15	577P3-74001	220
539A5-10501	124	539A8-92111	46	539H6-52051	13	577P3-74001	220
539A5-12001	124	539A8-92111	47	539H6-52051	15	577P3-74001	226
539A5-12001	124	539A8-92111	48	539H6-52151	13	577P3-74001	228
539A5-12011	121	539A8-92111	49	539H6-52151	15	577P3-74001	228
539A5-12041	121	539A8-92251	49	539H6-52201	158	577P3-74001	228
539A5-12101	123	539A9-02001	50	539H6-52251	13	577P3-74011	212
539A5-30251	166	539A9-02011	50	539H6-52251	15	577P3-74011	212
539A5-30261	166	539A9-32001	124	539H6-52351	13	577P3-74011	214
539A5-30602	153	539A9-62001	210	539H6-52351	15	577P3-74011	218
539A5-32201	157	539A9-92001	30	539H7-60101	2	577P3-74011	220
539A5-32301	166	539A9-92001	31	539H7-60301	15	577P3-74011	226
539A5-32311	157	539A9-92101	42A	54612-42021	3	577P3-74011	228
539A5-32361	43	539A9-92201	153	54612-72281	33	577P3-74011	228
539A5-32541	157	539B2-32201	35	55592-82001	204	577P3-74021	231
539A5-42351	154	539B2-60201	129	55592-82001	205	577P3-74031	231
539A5-92131	20	539B3-72021	39	55592-82001	206	59595-55301	112
539A5-92141	20	539B3-72151	35	55592-82001	207	62150-14321	232
539A5-92251	20	539B3-72201	35	55592-82001	208	62156-52501	99
539A5-92261	20	539B3-80101	2	55593-02371	186	62459-23371	221
539A5-92321	24	539B3-82001	204	55593-50521	79	62459-23371	221
539A5-92341	24	539B3-82001	206	55593-52461	79	62459-23371	229
539A5-92371	20	539B3-82011	204	55593-52471	79	63110-18921	226
539A5-92441	23	539B3-82011	206	55593-62061	69	63130-25614	174
539A6-22001	63	539B3-82021	206	55593-62551	224	63130-25614	175
539A6-22011	63	539B3-82031	206	55597-22111	52	63130-25614	176
539A6-22021	32	539B3-82041	206	556C7-22001	51	63130-25614	177
539A6-52001	14	539B3-82041	208	55792-52601	59	639A0-10011	221
539A6-52051	12	539B3-82051	206	55792-52611	59	639A0-10011	221
539A6-52051	14	539B3-82061	206	55792-52621	59	639A0-10011	229
539A6-52151	12	539B3-82071	206	55792-52641	59	639A0-10051	221
539A6-52151	14	539B3-82081	208	558A9-92001	42	639A0-10051	221
539A6-60301	8	539B3-82091	208	558A9-92001	42A	639A0-10051	229

PARTS NUMBER INDEX

Part No.	Fig.No.	Part No.	Fig.No.	Part No.	Fig.No.	Part No.	Fig.No.
78470-98028	77						
78658-42012	77						
79562-61202	77						
79562-61203	77						
80110-00628	84						
80430-00006	84						
89140-00006	132						
89140-00006	134						
89140-00006	84						
89140-00006	84						
89140-00006	84						
89140-00006	84						
93956-59279	30						
93956-59279	31						

No.PF-37AC

平成13年 12月　発行
平成15年　1月　改訂
平成15年　6月　改訂

TCM株式会社
本　社　大阪市西区京町堀1－15－10

発 行　TCMテクノ株式会社

ISSUED:DECEMBER,2001
REVISED:JANUARY,2003
REVISED:JUNE,2003

TCM CORPORATION
INTERNATIONAL MARKETING DIVISION : 1-15-5, Nishi－shimbashi, Minato－ku, Tokyo
105－0003, Japan
FAX : Japan +81－3－35918152, 3－35918153

無断で転載・複製を禁ず
All rights reserved.

SA－1506001(H)　Printed in Japan

TCM株式会社